City of Woodland

ENGINEERING STANDARDS:

DESIGN STANDARDS, STANDARD DETAILS AND CONSTRUCTION SPECIFICATIONS

2010

(INCLUDES ADDENDUMS NO. 1, 2 & 3)

City of Woodland

ENGINEERING STANDARDS:

DESIGN STANDARDS, STANDARD DETAILS AND CONSTRUCTION SPECIFICATIONS

2010

(INCLUDES ADDENDUMS NO. 1, 2 & 3)

City of Woodland

2010 ENGINEERING STANDARDS:
Design Standards, Standard Details And Construction Specifications
2010
Includes Addendums No. 1, 2 & 3

PREPARED BY:
Community Development Department
Engineering Division
300 First Street
Woodland, CA 95695
(530) 661-5820

Approved By:

BRENT MEYER
City Engineer
R.C.E. 52587

December 14, 2011
Date

Art Pimentel, Mayor
Marlin H. Davies, Vice-Mayor
William L. Marble, Council Member
Martie L. Dotie, Council Member
Tom Stallard, Council Member

Kevin O'Rourke, City Manager

{Blank Page}

PART 1. ENGINEERING DESIGN STANDARDS.....I

SECTION 1: GENERAL..... 1-1

1.01 PURPOSE..... 1-1
1.02 DEFINITIONS..... 1-2
1.03 ABBREVIATIONS..... 1-3

SECTION 2: DEVELOPMENT MAPS AND CONSTRUCTION PLANS... 1-7

2.01 GENERAL..... 1-7
2.02 PREPARATION OF MAPS..... 1-7
2.03 PREPARATION OF IMPROVEMENT PLANS..... 1-8
2.04 REVIEW AND APPROVAL PROCEDURE FOR FINAL MAPS AND IMPROVEMENT PLANS..... 1-10
2.05 MAP STATEMENTS..... 1-14
2.06 CONTROL NETWORK REQUIREMENTS..... 1-20
2.07 FIGURE 2A – TYPICAL MAP STATEMENT SHEET LAYOUT..... 1-22
2.08 FIGURE 2B – STREET LEGEND..... 1-23
2.09 FIGURE 2C – SEWER, WATER, STORM SYSTEMS LEGEND..... 1-24
2.10 FIGURE 2D – VERTICAL TITLE BLOCK..... 1-25

SECTION 3: TRANSPORTATION SYSTEM DESIGN..... 1-27

3.01 GENERAL..... 1-27
3.02 PLAN REQUIREMENTS..... 1-27
3.03 SOILS TESTING REQUIREMENTS..... 1-27
3.04 PAVEMENT DESIGN..... 1-27
3.05 CENTERLINE MONUMENTATION..... 1-28
3.06 STREET CROSS SECTION..... 1-28
3.07 INTERSECTION ANGLE..... 1-32
3.08 INTERSECTION SPACING..... 1-32
3.09 RIGHT-OF-WAY AT INTERSECTIONS..... 1-32
3.10 INTERSECTION CURB RADII..... 1-32
3.11 EXPANDED CORNER GEOMETRICS..... 1-33

3.12 CUL-DE-SAC GEOMETRICS 1-33
3.13 CUL-DE-SAC LENGTH 1-33
3.14 SLOPES 1-33
3.15 VERTICAL CURVE 1-33
3.16 CURB, GUTTER AND SIDEWALK 1-34
3.17 ADA ACCESSIBILITY REQUIREMENTS 1-34
3.18 DRIVEWAYS, SITE ACCESS 1-34
3.19 LATERAL CLEARANCE 1-39
3.20 EASEMENTS 1-39
3.21 SIGNING AND STRIPING 1-40
3.22 VALLEY GUTTERS 1-40
3.23 BUS TURNOUTS 1-40
3.24 STREET NAME SIGNS 1-40
3.25 NO PARKING SIGNS 1-42
3.26 ROUNDABOUT SIGNS 1-43
3.27 TRAFFIC CALMING FEATURES 1-43
3.28 FIGURE 3A – GEOMETRICS OF EXPANDED CORNERS AND CUL-DE-SACS 1-44
3.29 FIGURE 3B – SQUARE CUL-DE-SACS 1-45

SECTION 4: STORM DRAINAGE SYSTEM DESIGN 1-47

4.01 GENERAL 1-47
4.02 PLAN REQUIREMENTS 1-47
4.03 FACILITIES CLASSIFICATIONS 1-48
4.04 DESIGN CAPACITIES 1-49
4.05 STORM DRAINAGE CALCULATIONS 1-50
4.06 NON-REGIONAL DETENTION PONDS 1-53
4.07 STORM DRAINAGE PUMP STATIONS **1-54**
4.08 MAIN DRAINAGE SYSTEM PUMP STATIONS 1-55
4.09 SEEPAGE IN TO/OUT OF DETENTION PONDS AND OPEN CHANNELS 1-55
4.10 HORIZONTAL ALIGNMENT 1-55
4.11 HYDRAULIC GRADE LINE **1-56**

4.12 CURB INLETS 1-56
4.13 STORM DRAINAGE PIPE 1-56
4.14 COVER 1-56
4.15 MANHOLES 1-56
4.16 MINIMUM SIZE OF STORM DRAINS 1-57
4.17 VELOCITY 1-57
4.18 EASEMENTS 1-57
4.19 TRENCH DRAINS 1-58
4.20 STUB END PIPES 1-58
4.21 OPEN CHANNELS 1-58
4.22 RETENTION PONDS AND PERVIOUS PAVEMENT 1-59
4.23 LEVEES **1-60**
4.24 SLOPE PROTECTION 1-60
4.25 STRUCTURE OPERATION CRITERIA 1-60
4.26 DRAIN INLETS 1-60
4.27 FIGURE 4A – METHODS FOR ESTIMATING DESIGN FLOW 1-60
4.28 FIGURE 4B – MANNING'S 'N' FOR CHANNEL FLOW 1-61
4.29 FIGURE 4C – LAND USE DESIGNATION AND EFFECTIVE PERCENT IMPERVIOUS 1-62
4.30 FIGURE 4D - MEAN ANNUAL PRECIPITATION VS. RAINFALL DEPTH-DURATION-FREQUENCY (INCHES) 1-64
4.31 FIGURE 4E – MEAN ANNUAL PRECIPITATION VS. RAINFALL DEPTH-DURATION-FREQUENCY (INCHES/HOUR) 1-65
4.32 FIGURE 4F – SAMPLE RATIONAL METHOD CALCULATION SHEET 1-66
4.33 FIGURE 4G – LAND USE VS. EFFECTIVE PERCENT IMPERVIOUS AND 10-YEAR RUNOFF COEFFICIENTS FOR THE RATIONAL METHOD 1-67
4.34 FIGURE 4H – RATIONAL METHOD RUNOFF COEFFICIENT FREQ FACTORS 1-68
4.35 FIGURE 4I – RATIONAL METHOD SUBBASIN RUNOFF COEFFICIENT CALC SHEET 1-68
4.36 FIGURE 4J – PARAMETERS FOR OVERLAND FLOW WITH FLOW DEPTHS LESS THAN TWO INCHES (50MM) 1-69
4.37 FIGURE 4K – OVERLAND FLOW PRECIPITATION INTENSITY 1-69
4.38 FIGURE 4L – STANDARD OVERLAND FLOW PARAMETERS 1-70

4.39 FIGURE 4M – STORM DRAINAGE POND STANDARDS FOR NON-REGIONAL DETENTION PONDS 1-70
4.40 FIGURE 4N – RAINFALL INTENSITY DURATION FREQUENCY 1-72

SECTION 5: SANITARY SEWER SYSTEM DESIGN 1-73

5.01 GENERAL 1-73
5.02 PLAN REQUIREMENTS 1-73
5.03 DESIGN FLOW 1-73
5.04 PIPE DESIGN CAPACITY 1-74
5.05 PIPE SIZES AND SLOPES 1-74
5.06 TYPE OF PIPE 1-75
5.07 PIPE COVER AND CLEARANCE 1-75
5.08 HORIZONTAL AND VERTICAL ALIGNMENT 1-76
5.09 SERVICE LATERAL 1-76
5.10 MANHOLES 1-76
5.11 ONSITE CONNECTIONS 1-77
5.12 SPECIAL DESIGN 1-77
5.13 PUMP STATIONS 1-77
5.14 TRENCH LOADING CONDITIONS 1-77

SECTION 6: WASTEWATER PUMP STATION 1-79

6.01 SCOPE OF WORK 1-79
6.02 PLANS OF WASTEWATER PUMP STATIONS 1-79
6.03 SPECIFICATIONS 1-80
6.04 OTHER REQUIREMENTS 1-80
6.05 DESIGN FACTORS TO BE CONSIDERED 1-81
6.06 SITE IMPROVEMENTS 1-81
6.07 STRUCTURE AND APPURTENANCES 1-82
6.08 PUMPS, MOTORS, AND CONTROLS 1-88
6.09 PIPING AND VALVES 1-100
6.10 EMERGENCY PROVISIONS 1-102
6.11 MISCELLANEOUS 1-104
6.12 FORCE MAINS 1-104

SECTION 7: WATER DISTRIBUTION SYSTEM DESIGN..... 1-107

7.01 GENERAL 1-107
7.02 DESIGN PLAN REQUIREMENTS 1-107
7.03 FIRE FLOW 1-107
7.04 DESIGN FLOW 1-108
7.05 NORMAL OPERATING PRESSURES 1-109
7.06 MINIMUM OPERATING PRESSURES 1-109
7.07 PIPELINE VELOCITIES 1-109
7.08 PIPELINE LAYOUT 1-109
7.09 DISTANCES FROM SANITARY SEWER LINES 1-110
7.10 TYPE OF PIPE 1-110
7.11 MINIMUM SIZE OF PIPELINE 1-110
7.12 VALVE LOCATIONS 1-111
7.13 FIRE HYDRANTS 1-111
7.14 METERED WATER SERVICE 1-111
7.15 WATER METER SIZING 1-111
7.16 BACKFLOW PREVENTION 1-113
7.17 SERVICE TRENCH 1-114
7.18 WATER MAIN TRENCH COVER 1-114
7.19 WATER MAIN BLOW-OFF 1-114
7.20 WATER MAIN THRUST RESTRAINT 1-114
7.21 DISTRIBUTION SYSTEM WATER SAMPLING STATION 1-115
7.22 GROUNDWATER SOURCE PROTECTION 1-115
7.23 WATER CONSERVATION 1-115
7.24 WATER WELL ABANDONEMENT AND DESTRUCTION 1-116
7.25 FIGURE 7A - REQUIRED RESTRAINED LENGTH, FEET - FOR DUCTILE IRON PIPE ONLY 1-117
7.26 FIGURE 7B - REQUIRED RESTRAINED LENGTH, FEET - FOR POLYVINYL CHLORIDE PIPE (PVC) ONLY 1-118

SECTION 8: GRAYWATER DISTRIBUTION SYSTEM DESIGN... 1-119

8.01 GENERAL 1-119
8.02 SAFETY 1-119

8.03 CROSS-CONNECTION PREVENTION 1-119

SECTION 9: STREET LIGHTING SYSTEM DESIGN 1-121

9.01 GENERAL 1-121
9.02 STREET LIGHTING DESIGN STANDARDS 1-121
9.03 STREET LIGHTS REQUIRED 1-121
9.04 ILLUMINATION REQUIREMENT 1-121
9.05 DEVELOPER'S RESPONSIBILITY 1-122
9.06 PLAN REQUIREMENTS 1-122
9.07 STREET LIGHT LOCATIONS 1-123
9.08 STREET LIGHT TYPE AND SPACING 1-123
9.09 STREET LIGHT POLES 1-124
9.10 MAST ARM LENGTH 1-125
9.11 LUMINAIRES 1-125
9.12 SERVICE CONNECTION 1-125
9.13 PULL BOXES 1-125
9.14 CONDUCTORS 1-126
9.15 PHOTO CELL 1-127
9.16 CONDUITS 1-127
9.17 RIGHT-OF-WAY AND EASEMENTS 1-127
9.18 ELECTRICAL EQUIPMENT AND WORK 1-127
9.19 MASTER PLANNING 1-127
9.20 FIGURE 9A – ARTERIAL STREETS 1-129
9.21 FIGURE 9B – COLLECTOR STREETS 1-130
9.22 FIGURE 9C – LOCAL (RESIDENTIAL) OR INDUSTRIAL STREETS 1-131
9.23 FIGURE 9D – SPRINGLAKE AREA 1-132

SECTION 10: TRAFFIC SIGNALS 1-133

10.01 GENERAL 1-133
10.02 SIGNAL STANDARD TYPES 1-133
10.03 VEHICLE AND PEDESTRIAN SIGNAL TYPES 1-133
10.04 VEHICLE SIGNAL ALIGNMENT 1-134
10.05 NUMBER AND SIZE OF VEHICLE SIGNAL INDICATIONS 1-134

10.06 VEHICLE DETECTOR LAYOUT AND INPUTS 1-135
10.07 CONDUIT 1-136
10.08 CONDUCTORS 1-136
10.09 PULL BOXES 1-136
10.10 CONTROLLER CABINETS LOCATION 1-137
10.11 PROTECTED VS. PERMISSIVE LEFT TURN PHASING 1-137
10.12 TRAFFIC SIGNAL INTERCONNECT 1-138
10.13 MAST ARM STREET NAME SIGNS 1-138
10.14 EMERGENCY VEHICLE PREEMPTION (EVP) 1-138
10.15 SIGNAL PHASING 1-139
10.16 ADVANCE FLASHING BEACONS 1-139
10.17 MISCELLANEOUS APPURTENANCES 1-139
10.18 PREPARATION OF PLANS 1-140

SECTION 11: GRADING AND EROSION CONTROL DESIGN 1-143
11.01 GENERAL 1-143
11.02 RESIDENTIAL LOT GRADING 1-143
11.03 NON-RESIDENTIAL LOT GRADING 1-144
11.04 EROSION AND SEDIMENTATION CONTROL PLAN 1-146

SECTION 12: BUS SHELTERS 1-149
12.01 GENERAL 1-149
12.02 PLACEMENT GUIDELINES 1-149
12.03 DESIGN 1-149

SECTION 13: TREE PLANTING REQUIREMENTS 1-151
13.01 GENERAL 1-151
13.02 CITY APPROVED TREE LIST (COMPLETE) 1-151
13.03 APPROVED STREET TREE LIST 1-153
13.04 TREE PLANTING GUIDELINES 1-155
13.05 FIGURE 13A – REQUIRED INTERSECTION SIGHT DISTANCE 1-157

PART 2. STANDARD DETAILS 2-1

PART 3. CONSTRUCTION SPECIFICATIONS.....3-1

SECTION 1: GENERAL CONSTRUCTION REQUIREMENTS..... 3-3

1.01 PUBLIC NOTIFICATION 3-3
1.02 CONSTRUCTION STAKING 3-3
1.03 PROTECTION OF EXISTING UTILITIES 3-3
1.04 REPAIR OR RECONSTRUCTION OF EXISTING FACILITIES 3-4
1.05 MAINTAINING TRAFFIC 3-4
1.06 WARNING SIGNS 3-6
1.07 DUST, MUD AND NUISANCE ABATEMENT 3-6
1.08 CONSTRUCTION WATER 3-7
1.09 FINAL CLEAN UP 3-7
1.10 INSPECTION REQUIREMENTS 3-7
1.11 REPLACEMENT OF CONTROL NETWORK MONUMENTS 3-8
1.12 NEW CONTROL NETWORK MONUMENTS 3-8

SECTION 2: SUBGRADE PREPARATION 3-9

2.01 DESCRIPTION 3-9
2.02 COMPACTED NATIVE EARTH SUBGRADE 3-9
2.03 COMPACTED AGGREGATE BASE SUBGRADE 3-9
2.04 ACCEPTANCE SAMPLING AND TESTING OF SUBGRADE 3-10

SECTION 3: AGGREGATE MATERIALS 3-11

3.01 AGGREGATE BASE 3-11
3.02 ACCEPTANCE SAMPLING AND TESTING OF AGGREGATE BASE 3-11
3.03 SAND 3-12
3.04 CRUSHED ROCK 3-13

SECTION 4: HOT MIX ASPHALT 3-15

4.01 DESCRIPTION 3-15
4.02 TACK COAT 3-15
4.03 MIX DESIGN 3-16
4.04 PLACEMENT 3-16

4.05 ADJUSTMENT OF IRON 3-17
4.06 JOINTS 3-17
4.07 ACCEPTANCE SAMPLING AND TESTING OF HOT MIX ASPHALT 3-18
4.08 CONFORM GRINDING OF EXISTING STREETS 3-19
4.09 CRACK SEALING 3-19

SECTION 5: SURFACE TREATMENTS 3-23

5.01 SAND SEAL 3-23
5.02 FOG SEAL COATS 3-24

SECTION 6: PORTLAND CEMENT CONCRETE 3-29

6.01 CONCRETE CONSTRUCTION 3-29
6.02 CONCRETE IN STRUCTURES 3-32
6.03 PERVIOUS CONCRETE PAVEMENT 3-32
6.04 STEEL REINFORCEMENT 3-33
6.05 CONCRETE FORMS 3-33
6.06 DETECTABLE WARNING SURFACE 3-35

SECTION 7: GEOTECHNICAL FABRIC 3-37

SECTION 8: UNDERGROUND PIPELINE CONSTRUCTION 3-39

8.01 DESCRIPTIONS 3-39
8.02 MAXIMUM OPEN TRENCH WIDTH 3-40
8.03 MAXIMUM OPEN TRENCH LENGTH 3-40
8.04 BRACING AND SHORING EXCAVATIONS 3-41
8.05 TRENCH PLATES 3-41
8.06 TUNNELING, BORE & JACK, AND HDD OPERATIONS 3-42
8.07 BEDDING 3-43
8.08 INITIAL BACKFILL 3-44
8.09 FINAL BACKFILL 3-44
8.10 COMPACTION OF BACKFILL 3-45
8.11 SLURRY CEMENT 3-45
8.12 HMA PLACEMENT 3-46
8.13 CRACK SEALING OF TRENCH PATCH 3-46

8.14 SPECIAL CONSIDERATIONS FOR STREETS UNDER MORATORIUM 3-47

SECTION 9: LIME STABILIZATION 3-49

9.01 DESCRIPTION 3-49
9.02 MATERIALS 3-49
9.03 MIXING 3-49
9.04 COMPACTION 3-50
9.05 CURING 3-50
9.06 TESTING 3-50

SECTION 10: SANITARY SEWER COLLECTION SYSTEM 3-53

10.01 SEWER PIPE 3-53
10.02 MATERIALS 3-53
10.03 APPLICATION REQUIRING USE OF POLYMER-LINED DUCTILE IRON WASTEWATER PIPE 3-58
10.04 CAPS/STOPPERS 3-58
10.05 CHANNEL SECTIONS (MANHOLE BOTTOMS) 3-58
10.06 SEWER JOINTS 3-58
10.07 LAYING PIPE 3-59
10.08 CAPPING AND STOPPING OF SEWERS AND SEWER SERVICE LATERALS 3-60
10.09 LOW PRESSURE AIR TEST 3-60
10.10 PROTECTIVE COVERING IN LOW COVER AREAS 3-61
10.11 TRENCHING 3-61
10.12 CLEANING SEWER MAINS 3-61
10.13 WATER INFILTRATION TEST 3-61
10.14 VERTICAL GRADE STANDING WATER ALLOWANCE 3-61
10.15 INSPECTION AND DEFLECTION TESTING 3-62

SECTION 11: STORM DRAINAGE SYSTEM 3-63

11.01 DESCRIPTION 3-63
11.02 CONCRETE PIPE MATERIALS 3-63
11.03 CAST-IN-PLACE CONCRETE PIPE (CIPCP) 3-63
11.04 PAVEMENT SUBSURFACE DRAINS 3-63

11.05 LINE AND GRADE 3-63
11.06 INSTALLING CONCRETE PIPE 3-63
11.07 TRENCHING 3-64
11.08 MANHOLES, GENERAL 3-64
11.09 MANHOLE CASTINGS 3-64
11.10 CAST-IN-PLACE MANHOLES 3-65
11.11 PRECAST MANHOLES 3-65
11.12 CATCH BASINS 3-65
11.13 VERTICAL GRADE/STANDING WATER ALLOWANCE 3-65
11.14 CAPS/STOPPERS 3-65
11.15 INSPECTION 3-65

SECTION 12: WATER DISTRIBUTION SYSTEM 3-67

12.01 WATER PIPE 3-67
12.02 MATERIALS 3-67
12.03 REACTION BACKING 3-84
12.04 CONNECTIONS TO EXISTING MAINS 3-85
12.05 TRENCH EXCAVATION AND BACKFILL 3-85
12.06 CUTTING PIPE 3-85
12.07 PROCESS WATER 3-85
12.08 TESTING OF MAINS 3-86
12.09 DISINFECTION OF WATER LINES AND ACCEPTANCE SAMPLING 3-87
12.10 MARKER POSTS 3-89
12.11 WATER WELL ABANDONEMENT AND DESTRUCTION 3-90

SECTION 13: ELECTRICAL AND TRAFFIC SIGNALS 3-91

13.01 GENERAL 3-91
13.02 RULES AND REGULATIONS 3-91
13.03 MAINTAINING EXISTING ELECTRICAL FACILITIES 3-91
13.04 FOUNDATIONS 3-92
13.05 EXCAVATING AND BACKFILLING 3-92
13.06 CONDUITS 3-93
13.07 PULL BOXES 3-96

13.08 CONDUCTORS 3-97
13.09 PULLING WIRES 3-97
13.10 BONDING AND GROUNDING 3-98
13.11 ELECTRIC SERVICE AND TRAFFIC SIGNAL CONTROLLER 3-98
13.12 SERVICE PANELS **3-99**
13.13 STANDARDS 3-100
13.14 TRAFFIC SIGNAL CONTROLLER 3-100
13.15 TRAFFIC SIGNAL EQUIPMENT FUNCTIONAL TEST 3-100
13.16 SIGNAL CONTROLLER INSTALLATION AND INTERSECTION TURN-ON 3-101
13.17 INSPECTION 3-102
13.18 SALVAGE 3-102
13.19 LED SIGNAL INDICATIONS 3-103
13.20 MICROLOOP DETECTORS 3-103
13.21 STREET LIGHTS 3-103

SECTION 14: UNIFORM STANDARD FOR INSTALLATION OF SIGNS 3-105

14.01 DESCRIPTION 3-105
14.02 MATERIALS 3-105
14.03 INSTALLATION 3-106
14.04 INSTALLATION OF TYPE G-7 MASTARM MOUNTED STREET NAME SIGNS 3-107

SECTION 15: BUS SHELTERS 3-109

15.01 GENERAL 3-109

SECTION 16: TRAFFIC STRIPING, MARKINGS, LEGENDS AND ADDRESS NUMBERS 3-111

16.01 DESCRIPTION 3-111
16.02 THERMOPLASTIC 3-111
16.03 PAINT 3-111
16.04 PAVEMENT MARKERS 3-112
16.05 REMOVAL OF STRIPING, LEGENDS AND MARKINGS 3-113

16.06 ADDRESS NUMBERS 3-113

SECTION 17: FENCING 3-115

17.01 GENERAL 3-115
17.02 CONSTRUCTING FENCE 3-116
17.03 REDWOOD SLATS 3-117
17.04 TEMPORARY CONSTRUCTION FENCING 3-117

SECTION 18: CLEANING AND CLOSED-CIRCUIT TELEVISION INSPECTION OF SANITARY SEWER AND STORM DRAIN PIPELINES 3-119

18.01 OBJECTIVE 3-119
18.02 GENERAL 3-119
18.03 ACCESSIBILITY 3-120
18.04 SOUND CONTROL 3-120
18.05 SAFETY 3-120
18.06 PREPARATORY CLEANING 3-120
18.07 FLOW CONTROL 3-122
18.08 TELEVISION INSPECTION 3-124

SECTION 19: GRADING AND STORM WATER QUALITY MANAGEMENT 3-131

19.01 GENERAL 3-131
19.02 CONSTRUCTION STAKING 3-131
19.03 GRADING WORK 3-131
19.04 GRADING AT TREES 3-133
19.05 STORM WATER QUALITY MANAGEMENT 3-135

SECTION 20: LANDSCAPE AND PLANTING 3-141

20.01 GENERAL 3-141
20.02 CERTIFICATE OF COMPLIANCE 3-141
20.03 MEASUREMENT OF QUANTITIES 3-141
20.04 MATERIALS 3-141
20.05 CONDITIONS 3-141

20.06 SUBMITTALS 3-144
20.07 INSPECTIONS 3-145
20.08 SCHEDULING 3-145
20.09 SUBSTITUTIONS 3-145
20.10 PREPARING PLANTING AREAS 3-146
20.11 SOIL AMENDMENT 3-147
20.12 COMMERCIAL FERTILIZER 3-147
20.13 PLANTING - GENERAL 3-147
20.14 PLANTING – SHRUBS, VINES AND GROUNDCOVER 3-149
20.15 PLANTING - TREES 3-150
20.16 PLANTING – TURF FROM SOD 3-151
20.17 PLANTING – TURF FROM SEED 3-152
20.18 PLANT ESTABLISHMENT 3-152
20.19 WEED CONTROL 3-153
20.20 WATERING 3-153
20.21 START OF MAINTENANCE PERIOD INSPECTION 3-154
20.22 PRE-FINAL INSPECTION 3-154
20.23 REPLACEMENT 3-154
20.24 MAINTENANCE AND WARRANTY PERIOD 3-155
20.25 FINAL INSPECTION 3-156

SECTION 21: IRRIGATION SYSTEM 3-157

21.01 GENERAL 3-157
21.02 MANUFACTURER'S WARRANTIES 3-157
21.03 GUARANTEE 3-157
21.04 RECORD DRAWINGS 3-157
21.05 WATER TAPS ON CITY MAINS 3-157
21.06 CONNECTIONS TO EXISTING LANDSCAPE MAINS 3-158
21.07 SALVAGE 3-158
21.08 CONDUIT 3-158
21.09 BACKFLOW PROTECTION ASSEMBLIES 3-158
21.10 IRRIGATION CONTROL VALVES AND VALVE BOXES 3-158

21.11 VALVE MANIFOLDS 3-159
21.12 SWING JOINT ASSEMBLIES 3-159
21.13 SPRINKLERS 3-159
21.14 TRENCHES 3-160
21.15 INSTALLATION OF IRRIGATION PIPE 3-160
21.16 TESTING OF IRRIGATION SYSTEM 3-162
21.17 BACKFILL OF IRRIGATION PIPELINES 3-162
21.18 RE-PAVING 3-163
21.19 PLASTIC IRRIGATION PIPE 3-163
21.20 PLASTIC IRRIGATION PIPE FITTINGS 3-164
21.21 ELECTRIC AUTOMATIC CONTROLLER 3-164
21.22 ELECTRIC CONTROL WIRES 3-165
21.23 IRRIGATION CONTROL WIRES 3-166
21.24 ELECTRIC REMOTE CONTROL VALVES - SIZES 3/4" TO 2" 3-166
21.25 MANUAL CONTROL VALVES 3-166
21.26 IRRIGATION VALVE BOXES 3-166
21.27 QUICK COUPLING VALVES 3-167
21.28 RECORD DRAWINGS AND IRRIGATION STATION CHART 3-167

SECTION 22: PARK IMPROVEMENTS 3-169

22.01 GENERAL 3-169
22.02 MANUFACTURER'S WARRANTIES 3-169
22.03 GUARANTEES 3-169
22.04 MEASUREMENT OF QUANTITIES 3-169
22.05 CONDITIONS 3-169
22.06 SUBMITTALS 3-170
22.07 SUBSTITUTIONS 3-171
22.08 WARRANTY 3-171
22.09 MATERIALS 3-171
22.10 LAYOUT 3-172
22.11 SITE FURNISHINGS 3-172
22.12 PLAY EQUIPMENT 3-173

22.13 CONCRETE FOOTINGS 3-174
22.14 PARK WATER SYSTEMS 3-175
22.15 PARK IRRIGATION SYSTEMS 3-175
22.16 PARK SANITARY SEWERS 3-176
22.17 PARK STORM DRAINAGE 3-176
22.18 PARK ELECTRICAL AND LIGHTING 3-176
22.19 ENCLOSURES 3-177
22.20 CLEANING 3-177

SECTION 23: TREE PRUNING 3-179

23.01 GENERAL 3-179
23.02 STANDARDS 3-179
23.03 QUALITY CONTROL 3-179
23.04 PRUNING PLANS 3-179
23.05 PRUNING PRACTICES 3-180
23.06 PRUNING MATURE TREES 3-182
23.07 PRUNING YOUNG AND JUVENILE TREES 3-182
23.08 PALM PRUNING 3-182
23.09 ROOT PRUNING 3-183

SECTION 24: LED STREET LIGHTS 3-185

24.01 DEFINITIONS 3-185
24.02 REQUIREMENTS 3-187
24.03 SUBMITTALS 3-187
24.04 QUALITY CONTROL AND ASSURANCE 3-188
24.05 LUMINAIRE IDENTIFICATION 3-189
24.06 COMPATIBILITY 3-189
24.07 WARRANTY 3-189
24.08 PHOTOMETRIC REQUIREMENTS 3-189
24.09 MATERIALS 3-190
24.10 LED DRIVER 3-190
24.11 LAMP 3-191
24.12 SURGE PROTECTION 3-191

24.13 ELECTRICAL 3-191
24.14 APPROVED LED STREET LIGHTS 3-191

{BLANK PAGE}

PART 1. ENGINEERING DESIGN STANDARDS

{Blank Page}

SECTION 1: GENERAL

1.01 PURPOSE

The City of Woodland presents these Engineering Standards in an effort to improve clarity and consistency in the development, design, construction and operation of public facilities. These Standards establish minimum requirements and serve as mandatory guidance, ensuring equitable application of ordinances, rules and regulations as they impact city-wide infrastructure. Developers and designers need to review applicable sections on Design Standards, Standard Details, and Construction Specifications to ensure City requirements are addressed and incorporated in all applicable projects. As you utilize this guidance, we would greatly appreciate your comments as we strive to continuously improve its clarity and functionality. Thank you for your contribution to our community through your project endeavors.

At the City's professional discretion, these minimum standards may be modified anytime these criteria or methods do not appear to be in the best interest of the City or as new techniques are developed. On a case-by-case basis, and for sound engineering reasons, designers and consulting engineers may request minor modifications to these standards by completing the City's Design Exception Form. The decision of the City Engineer shall in all cases be final.

Situations not covered by these Standards shall be based on the following (listed in order of preference):

1. Woodland General Plan and any applicable Specific Plans (Springlake, East Street Corridor, Downtown), including adopted EIRs,
2. Project Conditions of Approval and/or Development Agreement (may supersede or modify certain requirements of these standards), including adopted EIRs,
3. Woodland Master Plans for infrastructure systems, such as, Streets, Water System, Sewer Collection System, Storm Drain System, Parks, etc.,
4. State Regulatory and/or Reference Manuals, such as, Caltrans Highway Design Manual and CA-MUTCD (Traffic Manual), Department of Health (Water), Regional Water Quality Control Board (Sewer & Storm), etc.,
5. Industry reference documents, such as, AASHTO Geometric Design of Highways and Streets, ASCE Design Manuals, AWWA Manuals and Standards, etc.,
6. Other Agency standards, such as, **Caltrans** Standard Specifications and Plans, Standard Specifications for Public Works Construction ("Green Book") and the accompanying Standard Plans for Public Works Construction.

1.02 DEFINITIONS

A. APPROVALS BY THE CITY ENGINEER: All approvals by the City Engineer referenced in these Standard Specifications shall be in writing.

B. CITY: The City of Woodland, a municipal corporation.

C. CITY ENGINEER: The City Engineer of the City of Woodland, California, acting directly or through an authorized representative.

D. CONSTRUCTION PLANS: Plans for the construction of street alignment, grade, geometric section, structural section; sanitary sewer alignment, grade, size; water system alignment, size, valve locations, fire hydrants; storm drain alignment, grade, size and other improvements as required by the City Engineer.

E. CONSULTING ENGINEER: Any persons, firm, partnership, or corporation authorized to practice Civil Engineering in the State of California who prepares or submits improvement plans and specifications to the City Engineer for approval.

F. DEPARTMENT: Community Development Department, City of Woodland.

G. DEVELOPER: Any person, firm, corporation, partnership or association engaged in the development of property in part or in whole by the placing of any improvements thereon, whether the property was previously developed in whole, in part, or at all.

H. EASEMENT: An easement dedicated to the City or Public Utility which shall be continuing and irrevocable unless legally abandoned.

I. ELECTRONIC MEDIA: Refers to electronic files saved on Zip Disks, compact disks, tapes or other suitable media for transmitting to the City of Woodland compatible with current operating systems and software. To the extent possible or practical, all files shall be provided in non-proprietary formats. Preferred software programs include, MS Word, MS Excel, AutoCAD (dwg or dxf), and latest Corps of Engineers HEC formats. Contact City to determine other acceptable formats.

J. IMPROVEMENTS: Refers to street work, sidewalk, curb, gutter, driveways, water mains & laterals, sanitary sewer mains & laterals, storm drainage lines, fire hydrants, streetlights, traffic signals, public utilities, landscaping, and fences to be installed on land to be used for public right-of-way.

K. MANUAL ON UNIFORM TRAFFIC CONTROL DEVICES (MUTCD): The "Manual on Uniform Traffic Control Devices" Caltrans - current edition.

L. MATERIALS AND CONSTRUCTION METHODS: Wherever this phrase appears in these Engineering Standards it shall be interpreted to mean Construction Specifications.

M. PUE & TPM: A public utilities easement and tree planting and maintenance easement granted to the City of Woodland.

N. RECORD DRAWINGS: The final "as-built" plans as submitted to the City of Woodland by the developer upon completion of construction.

O. SOILS REPORT: A report as prepared by any person or persons, firm, partnership or corporation legally authorized and licensed to practice Soils Engineering in the State of California.

P. STANDARD SPECIFICATIONS FOR PUBLIC WORKS CONSTRUCTION: The "Green Book" Standard Specifications for Public Works Construction, latest edition.

Q. ENGINEERING STANDARDS: The Engineering Design Standards, Standard Details and Construction Specifications of the City of Woodland.

R. STANDARD PLANS FOR PUBLIC WORKS CONSTRUCTION: The "Green Book" companion Standard Plans for Public Works Construction, latest edition.

S. **CALTRANS** MATERIALS MANUAL: The **Caltrans** Materials Manual of Testing and Control Procedures, latest edition.

T. **CALTRANS** SPECIFICATIONS: The Standard Specifications of the California Department of Transportation, including **Caltrans** Standard Plans.

U. SUBDIVISION ORDINANCE: Ordinance No. 990 as adopted by the City Council of the City of Woodland, dated June 1, 1982, and as amended.

V. ZONING ORDINANCE: Ordinance No. 1024 as adopted by the City Council of the City of Woodland, dated February 1, 1983, and as amended.

1.03 ABBREVIATIONS

The following abbreviations may be used in these Standards:

AASHTO	American Association of State Highway/Transportation Officials
ABMA	American Boiler Manufacturer's Association
ACI	American Concrete Institute
AFBMA	Anti-Friction Bearing Manufacturers Association
AGA	American Gas Association
AGC	Associated General Contractors
AGMA	American Gear Manufacturer's Association
AI	Asphalt Institute
AIA	American Institute of Architects
AIEE	American Institute of Electrical Engineers
AISC	American Institute of Steel Construction
AISI	American Iron and Steel Institute
AMCA	Air Moving and Conditioning Association
ANSI	American National Standards Institute, Inc.
API	American Petroleum Institute
APWA	American Public Works Association
ARA	American Railway Association

AREA	American Railway Engineering Association
ASCE	American Society of Civil Engineers
ASHRAE	American Society of Heating, Refrigeration and Air Conditioning Engineers
ASME	American Society of Mechanical Engineers
ASTM	American Society for Testing and Materials
AWG	American Wire Gauge
AWPA	American Wood Preservers' Association
AWS	American Welding Society
AWWA	American Water Works Association
BHMA	Builders Hardware Manufacturers Association
BMP	Best Management Practices
Bureau	United States Bureau of Reclamation
Caltrans	State of California, Department of Transportation
CASQA	California Stormwater Quality Association
CBC	California Building Code (version adopted by City)
CEC	California Electrical Code (version adopted by City)
CCMTC	California Concrete Masonry Technical Committee
CEQA	California Environmental Quality Act
CMC	California Mechanical Code (version adopted by City)
CPC	California Plumbing Code (version adopted by City)
CRSI	Concrete Reinforcement Steel Institute
DFPA	Douglas Fir Plywood Association
DWR	Department of Water Resources (State)
EIR	Environmental Impact Report (CEQA)
EIS	Environmental Impact Statement (NEPA)
ETL	Electrical Testing Laboratory
FS	Federal Specification
HDD	Horizontal Directional Drilling
ICBO	International Conference of Building Officials
IEEE	The Institute of Electrical and Electronics Engineers
IES	Illuminating Engineering Society
IPCEA	Insulated Power Cable Engineers Association
JICS	Joint Industry Conference Standards
LED	Light Emitting Diode
MBMA	Metal Building Manufacturer's Association
MSS	Manufacturers Standardization Society of the Valve and Fitting Industry Standards
NBFU	National Board of Fire Underwriters
NBS	National Buildings Standards
NEMA	National Electrical Manufacturers Association
NEPA	National Environmental Quality Act (Federal Law)
NFPA	National Fire Protection Association
OSHA	Occupational Safety and Health Act of 1970

PCA	Portland Cement Association
PCC	Public Contract Code of the State of California
PUE	Public Utility Easement
RWQCB	Regional (Central Valley) Water Quality Control Board
SMACNA	Sheet Metal and Air Conditioning Contractor's National Association
SWRCB	State Water Resources Control Board
SSPC	Steel Structures Painting Council
State	State of California
UL	Underwriter's Laboratory
USAS	The United States of America Standard Institute
USBR	United States Bureau of Reclamation
USPHS	United States Public Health Service
WCLIB	West Coast Lumber Inspection Bureau
WIC	Woodwork Institute of California

{Blank Page}

SECTION 2: DEVELOPMENT MAPS AND CONSTRUCTION PLANS

2.01 GENERAL

Complete plans and specifications for all proposed improvements, including any necessary dedications and easements, shall be submitted to the Engineering Division of the Community Development Department. They must receive approval by the City Engineer prior to the beginning of construction of any portion of such improvements within the public right-of-way. Such plans shall be prepared by or certified by a Registered Civil Engineer in accordance with the provisions of "Civil Engineer's Act", Chapter 7 - Division 3 of the Business and Professions Code, relating to the practice of Civil Engineering.

Exceptions from approval are any features of the plans that are contrary to, in conflict with, or do not conform to any California State Law, City of Woodland Ordinance or Resolution, or generally accepted good engineering practice in keeping with the standards of the profession; even though such errors, omissions or conflicts may have been overlooked in the Community Development Department review of the plans.

2.02 PREPARATION OF MAPS

Final and Parcel Maps shall be prepared in conformance with the Subdivision Map Act, the City of Woodland Subdivision Ordinance, and as follows.

A. Dimensions: Maps shall be clearly and legibly drawn on 18-inch by 26-inch (18" x 26") sheets with a one-inch (1") margin on all sides.

B. Scale: The scale of the map shall be one inch equals 50 feet or 100 feet and enough sheets shall be used to accomplish this end. A graphical scale not less than three inches in length shall be shown in addition to a numerical scale.

C. Form: The statement sheet shall be drafted so that the statements (as applicable) will appear in the form and location as depicted in Section 2.05 and on Figure 2A. Statements shall be appropriately completed and signed in the following order:

1. Owner
2. Notary
3. Trustee (if applicable)
4. Trustee's Notary
5. Dedication
6. Engineer (or Surveyor)
7. City Consultant
8. City Engineer
9. Community Development Director
10. City Clerk

11. County Tax Collector
12. County Recorder

D. Closure: The maximum error of closure shall not exceed 0.010'.

E. Digital Files: The basis of bearings and coordinates shall be coincident with the current City of Woodland Geodetic Control Survey (tied into two existing control network monuments). Requirements for tie-in to two control monuments shall not apply to remodels of existing single family residences or as determined by the City Engineer. All other development with on site storm, sewer or water systems shall tie to two control monuments.

Digital files shall conform to the following:

1. Drawing shall be submitted in AutoCAD .dwg format.
2. Global Coordinate System for the drawing shall be California Coordinate System of 1983 (CCS83) (1999.51) California Zone 2 U.S. Survey Foot.
3. Electronic files to be submitted on Compact Disk.
4. Text files to be submitted in Microsoft Word.
5. Spread Sheets to be submitted in Microsoft Excel.

2.03 PREPARATION OF IMPROVEMENT PLANS

Construction plans and specifications shall be prepared in accordance with the following:

A. Dimensions: Construction plans shall be clearly and legibly drawn on 24 inch by 36 inch (24" x 36") sheets with a 1-1/2 inch (1½") clear margin on the left edge and 1/2 inch (½") margins on all other edges.

B. Scale: Horizontal scale shall be 1" = 40'; vertical scale shall be 1" = 4' or as approved. Numeric & graphic scale shall appear on each sheet.

C. Form:

1. *Title Sheet.*

a. Name and Number of Subdivision.

b. Plan view showing the entire street right-of-way layout (Scale: 1" = 100'), proposed water and sewer mains, storm drainage system, lot numbers and other miscellaneous improvements to be installed.

c. Index of Sheets.

d. Complete Legend. (See Figure 2B and 2C)

e. Typical Street Section.

f. Vicinity Map with North Arrow.

g. Title Block shall be the City of Woodland standard on all sheets (See Figure 2D). An electronic version of the standard Title Block in AutoCAD .DWG and .DXF formats is available from the City of Woodland Engineering Division.

h. Temporary and permanent bench marks and descriptions.

i. General and Construction Specification notes relating to project.

2. *Street Plan and Profile Sheets.*

a. Plan view of each street to be improved shall be shown on separate sheets indicating existing improvements, proposed improvements and future improvements, if known. Proposed improvements shall include sidewalk, curb, gutter, driveways, sewer mains, water mains, water service and sewer lateral locations, storm drains, manholes, valves, fire hydrants, fencing, barricades, monuments, survey stationing and other data as required by the City Engineer. Survey stationing shall normally read left to right with the north arrow pointing to the top or left edge of the sheet. All stationing shall be a continuation of existing improvements where possible.

b. A profile view of each street shall be shown immediately below its plan view. The profile shall include existing grade lines, sewer mains, storm drains, water mains, public utility mains, all utility crossings, and gutter flow line. Elevations shall be shown for the gutter flow line at grade break points, manhole and catch basin inverts, and water main crossings with other utilities.

c. All line work must be clean, sharp and heavy. Letters and numerals must be 1/8-inch minimum and well-formed. Numerals showing profile elevations shall not be bisected by station grid lines.

3. *Grading Plan.* Grading plans shall clearly show each lot, how each lot drains, pad elevation of each lot, street high and low points along with street slopes, and elevations of adjacent properties. The plan shall conform to Section 11 of these Engineering Design Standards.

4. *Erosion Control Plan.* An Erosion Control Plan shall be prepared in conformance with Section 11 of these Engineering Design Standards.

5. *Commercial or Industrial Site Development Plan.* Site development plans shall include building pad, finished floor and garage elevations, individual lot drainage pattern, adjacent land drainage, driveway locations, fencing, existing contours, existing trees, wells, ditches and other landmarks important in the construction of the improvements. In addition, adjacent lot grading shall be shown.

D. Digital Files: The basis of bearings and coordinates shall be coincident with the current City of Woodland Geodetic Control Survey (tied into two existing control network monuments). Requirements for tie-in to two control monuments shall not apply to remodels of existing single family residences or as determined by the City Engineer. All other development with on site storm, sewer or water systems shall tie to two control monuments.

Digital files shall conform to the following:

1. Drawing shall be submitted in AutoCAD *.dwg format.
2. Global Coordinate System for the drawing shall be California Coordinate System of 1983 (CCS83) (1999.51) California Zone 2 U.S. Survey Foot.
3. Electronic files to be submitted on Compact Disk.
4. Text files to be submitted in Microsoft Word.
5. Spread Sheets to be submitted in Microsoft Excel.

2.04 REVIEW AND APPROVAL PROCEDURE FOR FINAL MAPS AND IMPROVEMENT PLANS

A. The review and approval process will proceed in the order listed.

B. Prior to preparation of the final map or improvement plans, the Consulting Engineer shall submit a Street Site Plan showing any roadway improvements identified in the City Street Master Plan or the City Bikeway Master Plan, including traffic calming features. The submittal shall also include a Utility Site Plan showing any utility improvements identified in the current Storm Drainage Master Plan, Wastewater Facilities Master Plan, and Water System Master Plan, as applicable. The Site Plans may be included with an Initial Study, EIR, Tentative Map or Conditional Use Permit Application.

No work shall be started on any detailed Improvement Plan until the City Engineer has approved in writing any Street Site Plan or Utility Site Plan.

C. Consulting Engineer prepares and submits Final Map or Parcel Map, and Improvement Plans to the Community Development Department.

The following items must be presented with the original submittal:

1. All information required by California Subdivision Map Act, City Subdivision Ordinance, City Tentative Map Checklist, and City Engineering Design Standards.

2. Two (2) sets of Improvement Plans, including design calculations.

3. Final Map Application including:

   a. Two (2) copies of the map.

   b. Vesting Deed, Preliminary Title Report (dated within 90 days of Final Map application, copies of deeds referenced.

   c. Closure calculations with parcel acreage.

   d. Soils report except where an R-value of 5 is assumed.

   e. City of Woodland Planning Commission conditions of approval.

4. Fees for map checking and plan checking.

5. Cost estimate for Public Improvements.

In the event that the above items are not complete, or if a significant number of items listed on the "Final Map and Improvement Plan Checklist" are incomplete, the City Engineer may determine that the project is not suitable for review. The project will not be "Logged In" until such time as the Map, Plans and other required submittal items are at an acceptable stage of completion for City review.

D. City checks data in Step B and returns to Consulting Engineer for changes and/or corrections. Improvement Agreement is prepared and sent for Developer review.

E. Consulting Engineer makes all changes and/or corrections and submits corrected Final Map and Improvement Plans. Developer returns Agreement with any comments or a letter stating the Agreement is acceptable as is.

F. Steps “C” and “D” are repeated until Map, Plans, and Agreement are acceptable or upon the approval of the City Engineer, City may approve improvements plans prior to the final map if:

1. The developer executes an improvement agreement and posts security and insurance.

2. The map has been submitted, reviewed and been determined to be substantially complete by the City.

3. The following note is added to the front sheet of the plans: "Plans have been approved prior to the completion of the final map. Any discrepancies with the final map shall be resolved by the developer or his consulting engineer prior to the acceptance of public improvements."

G. The Consulting Engineer shall submit one set of original Improvement Plans and/or two sets of original Final Maps[1] on mylar and electronic media (AutoCAD .dwg format on Compact Disk) for Council approval of the Map and certification of plans by the City Engineer. Developer delivers executed agreement, and all items required by said agreement (i.e.; fees, insurance, securities, deeds, etc.) to the Community Development Department.

H. City Engineer signs the Improvement Plans and the Final Map.

I. Final Map and Subdivision Improvement Agreement are scheduled for City Council approval. At least 14 days lead-time is required for any City Council agenda. Council approves Map and Agreement.

J. City Clerk and Mayor sign the Improvement Agreement and City Clerk records Final Map and Agreement.

K. Signed Improvement Plans are released to the Consulting Engineer.

L. Prior to start of construction, Developer shall coordinate pre-construction meeting. At, or prior to this meeting, Consulting Engineer shall supply City with two full size 24" X 36" copies and two reduced size 11" X 17" paper copies of the complete set of approved Improvement Plans. The City will supply the Developer with a construction questionnaire to be completed and returned before construction shall be allowed to begin.

M. During construction, the Contractor shall maintain one set of record drawings readily available to the City Engineer. Upon request for final inspection, a set shall be supplied to the City for use by City personnel during final inspection.

1. Construction Changes

[1] The City will process both sets of Final Maps for signatures and keep one set as a conformed copy upon recordation.

a. During construction, if field conditions necessitate a change to the design, then the Engineer shall revise the Plan(s), indicate the changes on the plans and submit the revised Plan(s) to the City for review and approval prior to construction.

b. Indication of revisions on the Plan(s) shall use a method that distinctly indicates and numbers each such revision.

N. Prior to final acceptance of the improvements, the developer's engineer shall submit a complete set of Record Drawings on reproducible mylar and electronic media to the City as follows:

1. Contractor's Record Drawings.

a. All modifications as shown on the record drawings maintained by the Contractor shall be conveyed on the construction plans signed by the City Engineer.

b. Any features not built according to plan shall be lined out and the revised location and details shall be added in ink.

2. Engineer's Record Drawings.

a. The Engineer shall use the Contractor's Record Drawings to prepare and submit a review set of the draft Record Drawings to the City.

b. The City will review the draft Record Drawings and provide comments for further edits and re-submittals if required.

c. If the Engineer re-plots the drawings (plans) from CAD, then the final Record Drawings shall be stamped and signed by the design professionals. For this method, indicate in the city approval blocks: "Original Design Plans approved by City Engineer on date mon/day/year".

d. The Engineer may, instead of re-plotting the drawings, use the original (pre-construction) mylar plans to produce the Record Drawings. All deleted or moved features shall be lined out and revised locations and/or additional features inked on the originals.

e. The plans shall be stamped "Record Drawing" and dated.

f. The Final Record Drawings will be submitted on original mylar material when so directed by the City.

3. Final Inspection.

a. The City will use the Record Drawings as a basis for final inspection. It is the City's option to use the draft Record Drawings for the final inspection depending on completeness.

4. Electronic Media.

   a. At project completion, the Engineer shall submit a complete set of electronic record drawings complying with the specifications of sections 2.02 and 2.03 for digital files, including a set of files in Adobe Acrobat format (*.pdf) of the signed record drawings.

   b. Digital engineering seals may be removed from the CAD files.

O. Acceptance of the improvements shall be scheduled for City Council approval upon completion of construction to the satisfaction of the City Engineer.

P. Once the project is accepted by Council, the City Clerk will, within five (5) working days, prepare and file a Notice of Completion with the Yolo County Recorder. The date the Notice is recorded will begin a thirty-five (35) day lien period during which liens may be filed against the project.

Q. The Faithful Performance Bond (for 100% of the estimated cost of public improvements) will be released to the Developer at the time City Council accepts the project. The Labor and Materials Bond (for 50% of the estimated cost of public improvements) will be retained by the City for a period of sixty-five (65) days beyond the date of acceptance. The Certificate of Guaranty (for 10% of the estimated cost of public improvements) is held for a period of time as required by Section 21-13-2 of the City of Woodland Code.

2.05 MAP STATEMENTS

The following statements shall be used on all maps submitted to the City of Woodland.

NOTE: Language in brackets [ ] indicate optional or alternate wording when applicable.

OWNER'S STATEMENT

We, the undersigned, do hereby consent to the preparation and filing of this map of Subdivision No. _____ for record; and we do hereby state that in order to pass clear title to the land delineated within the exterior boundary of this map the consent of no other persons is necessary.

[We do hereby irrevocably offer for dedication, in fee, to the City of Woodland, a Municipal Corporation, for public use, the parcels shown hereon as Parcel "__" and Parcel "_____".]

[We do hereby irrevocably offer in fee to the City of Woodland those portions shown hereon as Parcel "_____" and Parcel "_____".]

[We do hereby irrevocably offer to dedicate, in fee, to the City of Woodland for public use (place names of thoroughfares or streets).]

[We do hereby irrevocably offer to dedicate for specific purposes in easement, to the City of Woodland for public use for access, maintenance and operation of drainage, water, sewer, gas pipes, power, lights, signs, telephone, communication and television cables; and any and all other utility services together with any and all necessary appurtenances in each case, in, over and across those strips of land shown or designated as Public Utility Easement (P.U.E.); and easements for _____.]

[We do hereby relinquish all abutters rights to ingress and egress as delineated hereon (////////) as non-access easements.]

BY: _____ _____
(Name) **(Title)**

NOTARY ACKNOWLEDGMENT

STATE OF CALIFORNIA)
)§.
COUNTY OF YOLO)

On _____, before me, the undersigned, a Notary Public in for said state, appeared _____

_____

proved to me on the basis of satisfactory evidence to be the person(s) whose name(s) is/are subscribed to the within instrument and acknowledged to me that he/she/they executed the same in his/her/their authorized capacity(ies), or the entity upon behalf of which the person(s) acted, executed the instrument.

Witness My Hand

Notary Signature _____

Printed Notary's Name

Notary's Principal Place of Business

Expiration of Notary's Commission

TRUSTEE'S STATEMENT

_____, as trustee under deed of trust recorded _____, instrument number _____, of Official Records, Yolo County Records, hereby consents to the preparation and filing of this map.

By:

Print Name: _____

Title: _____

DEDICATION STATEMENT

Pursuant to Section 66477.5 of the Subdivision Map Act the name and address of the grantor of the dedicated property is as follows:

_____

_____

The legal description of the property dedicated is as follows:

1. All roads, avenues, drives, ways, courts and _____ shown hereon.

2. Parcels _____ as shown hereon. The City of Woodland shall reconvey the property to the grantor, or the successor(s) in interest, if it determines pursuant to Section 66477.5 of the Subdivision Map Act that the same public purpose for which the property was dedicated does not exist except for all or any portion of the property that is required for that same public purpose or for public utilities.

ENGINEER'S OR SURVEYOR'S STATEMENT (Final Maps Only)

I do hereby state that I am the Registered Civil Engineer [Land Surveyor] responsible for the survey of the lands, and preparation of the final map and that the said survey was made by me or under my direction on _____ and the same is true and complete as shown. All monuments are of the character and occupy the positions indicated or will be set in such position on or before _____ and that the monuments are, or will be, sufficient to enable the survey to be retraced.

_____	_____	_____
Date	Name	RCE (LS) Number

ENGINEER'S OR SURVEYOR'S STATEMENT (Parcel Maps Only)

This map was prepared by me or under my direction [and was compiled from record data] [and is based upon a field survey] in conformance with the requirements of the Subdivision Map Act and local ordinance at the request of _____ on _____. I hereby state that this parcel map substantially conforms to the approved or conditionally approved tentative map, if any. [All monuments are of the character and occupy the positions indicated or will be set in such position on or before _____ and that the monuments are, or will be, sufficient to enable the survey to be retraced.]

(Signed) _____

R.C.E. (or L.S.) No. _____

CITY CONSULTANT'S STATEMENT

I hereby state that I have examined this Plat of [Final Map] [Parcel Map] entitled "[Subdivision No. _____] [Parcel Map No. _____]" and I am satisfied that said Plat is technically correct in accordance with Section 66442 of the Subdivision Map Act.

Dated: _____

License: _____

Expires: _____

CITY ENGINEER'S STATEMENT

I hereby state that I have examined this Plat of [Final Map] [Parcel Map] entitled "[Subdivision No. _____] [Parcel Map No. _____]" and find it to be substantially the same as the Tentative Map submitted to the Planning Commission of the City of Woodland, and that all provisions of the Subdivision Map Act and all applicable City ordinances have been complied with.

Dated: _____

_____

BRENT MEYER, City Engineer
LICENSE: R.C.E. #52587
EXPIRES:

COMMUNITY DEVELOPMENT DIRECTOR'S STATEMENT

I hereby state that I have examined this map and have found it to be substantially the same as it appeared on the tentative map, and any approved alterations thereof, and that it complies with all applicable City ordinances and conditions of approval.

_____ _____

Date Community Development Director, City of Woodland

CITY CLERK'S STATEMENT (Final Maps Only)

I hereby state that at its regularly scheduled meeting of _____, the City Council of the City of Woodland approved this Final Map of Subdivision No. _____ and has accepted on behalf of the public all land, rights of way and easements hereon offered for dedication.

Dated: _____ _____

City Clerk, City of Woodland

CITY CLERK'S STATEMENT (Parcel Maps that include dedications only)

The undersigned City Clerk of the City of Woodland does hereby state that the rights-of-way and easements hereon offered for dedication are accepted on behalf of the City of Woodland, pursuant to the City Council Resolution 1457, recorded October 15, 1959, in the Recorder's Office of Yolo County, State of California.

In witness thereof, I have hereunto set my hand this ___ day of _____, 20___.

Dated: _____ _____

City Clerk, City of Woodland

COUNTY TAX COLLECTOR'S STATEMENT

I, the undersigned, Tax Collector and Redemption officer of Yolo County, do hereby state that according to the records of this office there are no liens against this subdivision or any part thereof for unpaid State, County, Municipal, or local taxes or special assessments collected as taxes, except taxes or special assessments not yet payable.

Furthermore, pursuant to the Yolo County Board of Supervisors Resolution No. 89-168 I do hereby certify on behalf of the Clerk of the Board of Supervisors that Chapter 4, Article 8, of the Subdivision Map Act has been complied with regarding deposits.

IN WITNESS WHEREOF, the undersigned has caused his name to be subscribed on this _ _____ day of _____, 20_____.

_____

County Tax Collector

COUNTY RECORDER'S STATEMENT

Filed this _____ day of _____, 20_____ at _____,

in Book _____ of _____, at page _____ at the request of _____.

_____

County Recorder - County of Yolo

By: _____

2.06 CONTROL NETWORK REQUIREMENTS

A. Data shall be submitted both in U.S. Survey Foot and in Meters.

B. Observation data shall be submitted digital format. Data shall include GPS observation files in both native and RINEX format and digital level observation files. Other observation data, such as field notes and station occupation sheets, may be submitted as *.jpg, *.tiff, *.bmp, *.pdf or *.doc (or *.docx).

C. Vertical Control (Leveling) shall be NAVD 88.

D. Leveling of Second Order Class II shall be used for Vertical accuracy. Level data shall be subject to minimally constrained least-squares adjustment. YSN (Yolo Subsidence Network) station values shall then be introduced gradually as constraints, with the intermediate results monitored to detect outliers that might result from a disturbed YSN station mark. Barring the discovery of outliers, all YSN monuments shall be used to constrain the final adjustment after converting their positions to epoch 1999.51 via the Horizontal Time Dependent Positioning (HTDP) software available from the National Geodetic Survey.

E. Horizontal Control (static or rapid-static GPS observations) shall be California Coordinate System of 1983 (CCS83) (1999.51) California Zone 2 U.S. Survey Foot.

F. Horizontal accuracy, following a minimally constrained least-squares adjustment shall be within 1 cm at the 95% confidence level. YSN station values shall then be introduced gradually as constraints, with the intermediate results monitored to detect outliers that might result from a disturbed YSN station mark. Barring the discovery of outliers, all YSN monuments shall be used to constrain the final adjustment after converting their positions to epoch 1999.51 via the Horizontal Time Dependent Positioning (HTDP) software available from the National Geodetic Survey.

G. The locations of monuments used for the Geodetic Control Network, whether new or existing, shall be approved in writing by the city engineer or his designate prior to use in the network.

H. Monuments shall be visible from an aircraft and as close as possible to section corners and quarter corners.

I. Existing monuments may be used if they meet or exceed City of Woodland Control Network Monument Details (346, 347 and 348), or if the monument is approved by city engineering. Other types of new monuments may be used with written approval of the city engineer or his designate prior to installation. If the monument is to be located in traffic areas, a G5 box and cover is to be used.

J. The new or replaced monuments shall be tied to the existing City of Woodland Geodetic Control Network.

K. A Surveyor's Report shall be submitted (including discussions of the network adjustment processes, issues that arose during the project and their resolutions and a certification of the results).

L. A Record of Survey shall be submitted to the Yolo County Surveyor (Mylar and Electronic (AutoCAD, version determined by the city engineer), copies are to be submitted to the City.

2.07 FIGURE 2A – TYPICAL MAP STATEMENT SHEET LAYOUT

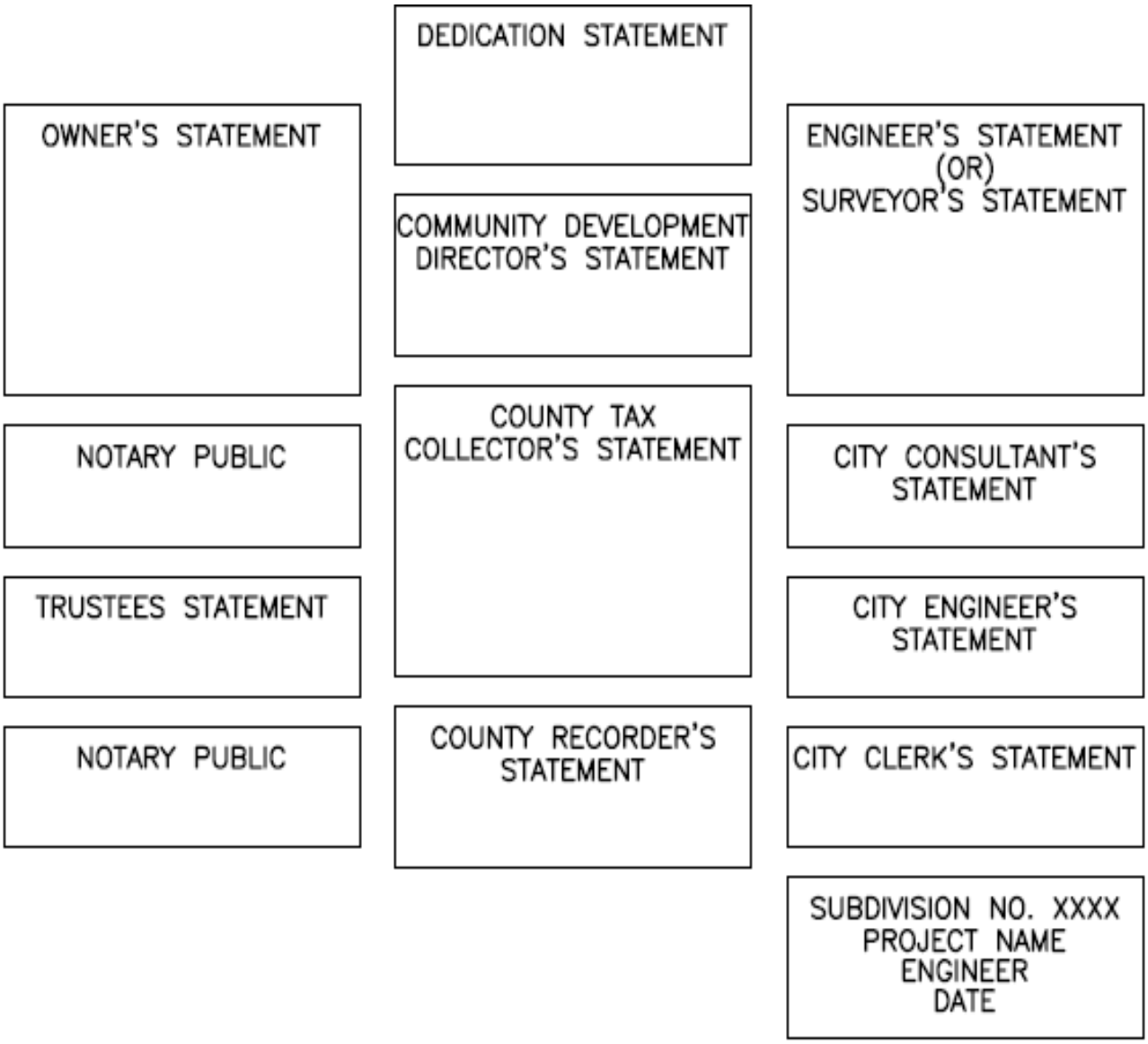

2.08 FIGURE 2B – STREET LEGEND

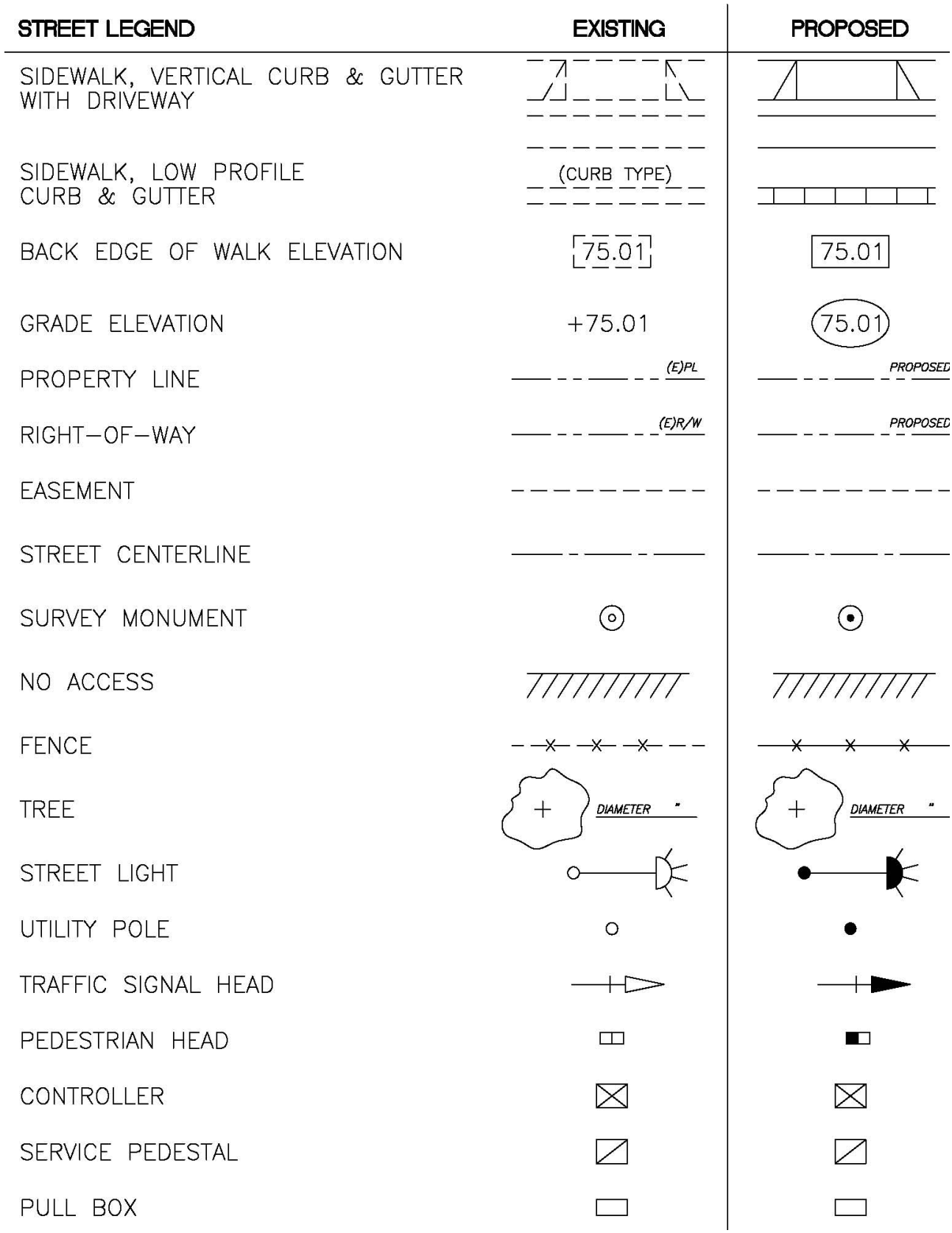

2.09 FIGURE 2C – SEWER, WATER, STORM SYSTEMS LEGEND

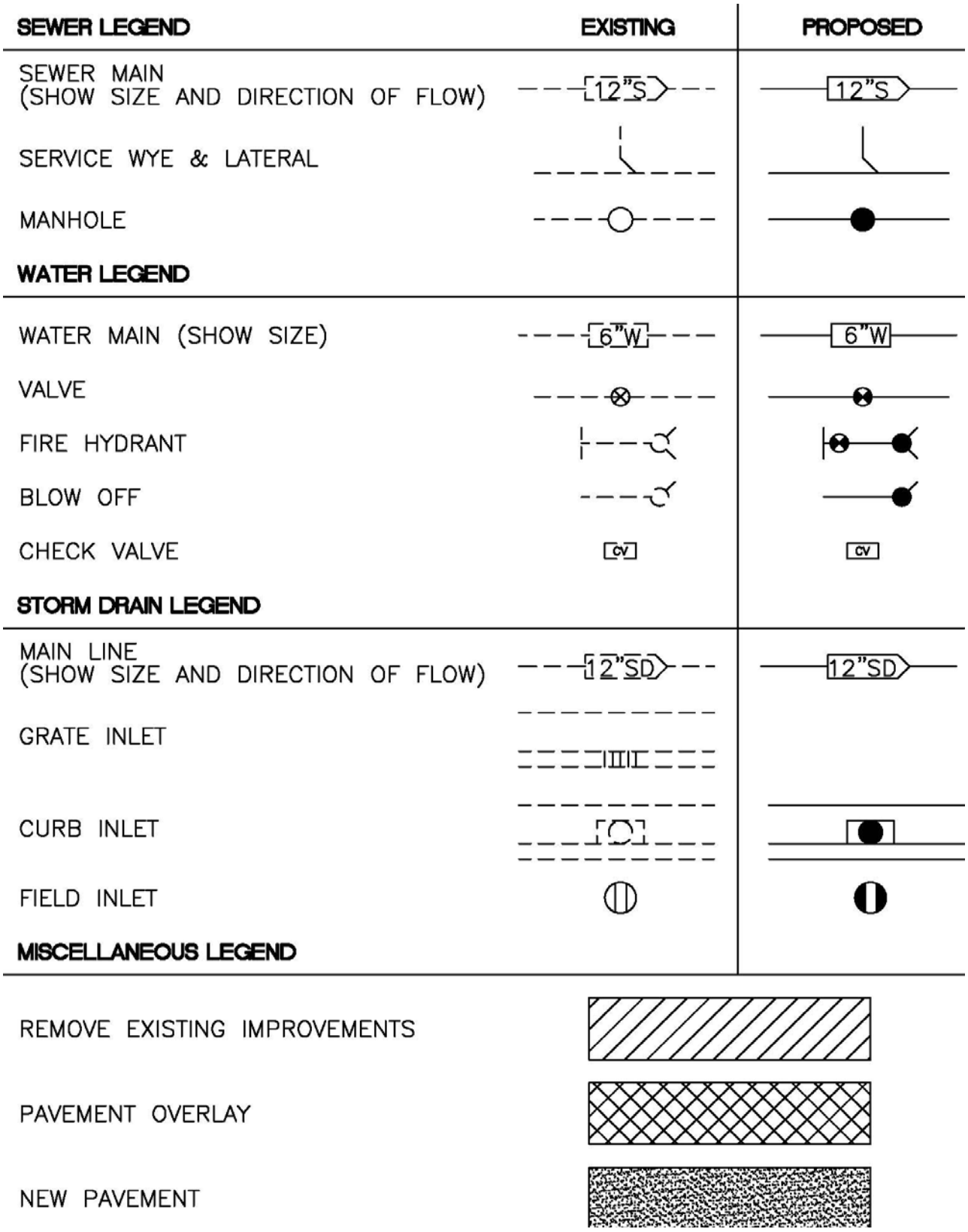

2.10 FIGURE 2D – VERTICAL TITLE BLOCK

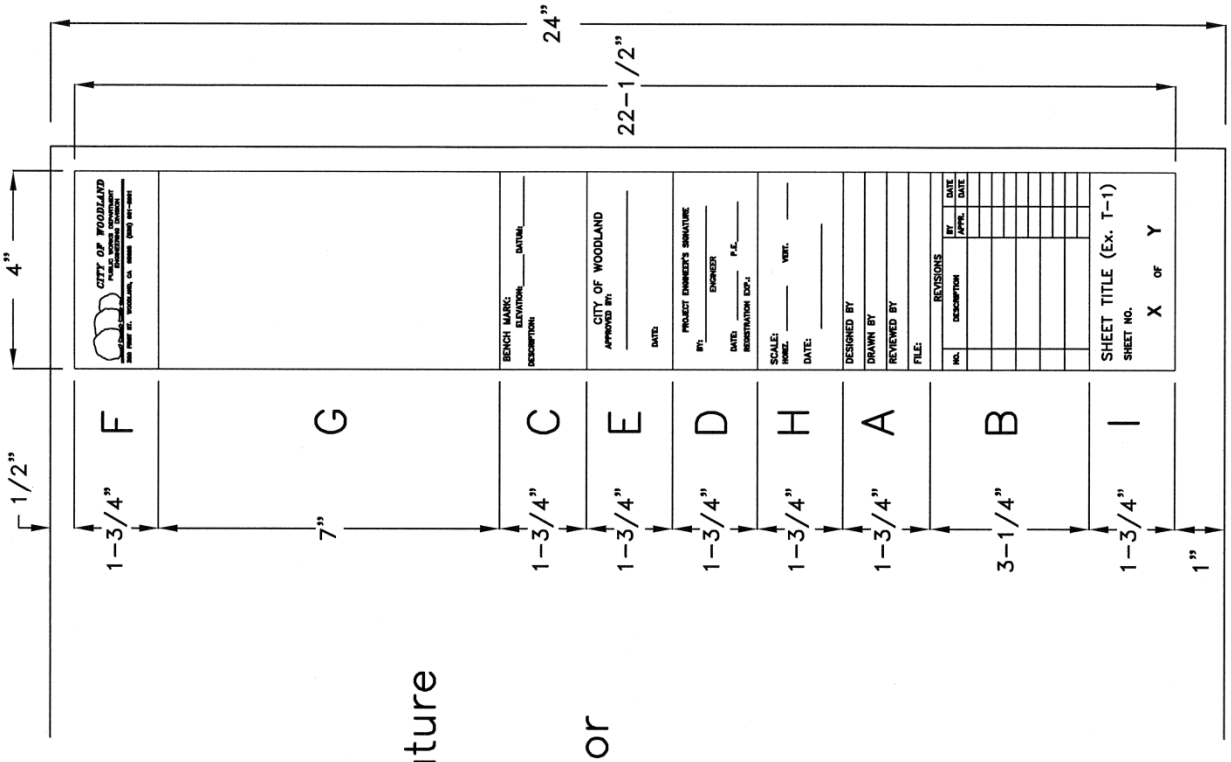

A. Designed by
B. Revision Box
C. Bench Mark Info.
D. Project Engineer's Signature
E. Approved by
F. Project Engineers Logo or City of Woodland Logo
G. Project Title
H. Scale, Date
I. Sheet Number

TITLE BLOCK

{Blank Page}

SECTION 3: TRANSPORTATION SYSTEM DESIGN

3.01 GENERAL

Street improvements shall be designed to serve the ultimate level of development as defined in the current edition of the City Standard Specifications, City General Plan, the City Bikeway Master Plan, and the City Street Master Plan.

All transportation features shall be reviewed by the City's Traffic Engineer or designated traffic engineering staff for compliance with this section. All deviations and variances will be subject to review, comment and approval by the City Traffic Engineer or designee.

3.02 PLAN REQUIREMENTS

The street improvement plans shall show geometric design including cross-section, street width, traffic lanes, curb and gutter, sidewalk, driveways, existing and proposed right-of-way and easements, grades, existing and proposed utilities, signing and striping, and any supplementary information and data necessary to assist in properly reviewing and approving the street design.

Design shall avoid underground utility trenching in streets subject to moratorium under the provisions of Construction Specifications Section 8.14, Special Considerations for Streets Under Moratorium.

3.03 SOILS TESTING REQUIREMENTS

At least three (3) soil sample analyses shall be performed for any project site less than 50 acres. For each 25 acres over the initial 50 acres, one (1) additional test shall be made. Tests shall be performed at the estimated elevation of the subgrade and at locations selected for adequate representation of the quality of the basement soil. An R-value shall be determined for each test using California Test Method 301 procedures.

The Geotechnical Engineering Report shall be bound in 8½ x 11 inch folders and shall include a map of the project area showing proposed and existing streets, contours, locations of the test samples, R-value results and proposed structural pavement sections.

3.04 PAVEMENT DESIGN

Street pavement structural design thickness shall be calculated for all roadway types using the Caltrans Highway Design Manual, including all structural safety factors. Traffic indexes for use in these calculations are listed in Table 3-1, Street Cross Sections and Design Parameters. If soils tests are not available, an R-value of 5 shall be used for pavement design. In all cases, the minimum allowable structural pavement section shall be four inches (4") of HMA and twelve inches (12") of aggregate base.

3.05 CENTERLINE MONUMENTATION

Standard monuments shall be placed at all street centerline intersections, at the center of all standard cul-de-sacs, and at any intermediate points necessary for maintaining line-of-sight from one monument to the next.

3.06 STREET CROSS SECTION

A. Street Widths: Curb-to-curb street widths and right-of-way requirements behind curb will vary depending on planter strip widths and landscape architecture features, for the types of streets used. Streets shall be classified as follows:

1. *Residential.* A residential street shall have a face-of-curb to face-of-curb width of 35 feet.

2. *Primary Residential.* Primary residential streets shall have a face-of-curb to face-of-curb width of 40 feet. A residential street along which schools or parks are proposed to front shall be classified as a primary residential street. Additional primary residential streets may be designated based on the City's review of the traffic circulation system.

3. *Collector.* A street identified in the General Plan, Streets Master Plan, or projected to carry more than 3,000 vehicles per day (vpd) shall be classified as a collector street. Collector streets shall have a face-of-curb to face-of-curb width of 40 feet. In cases where the projected traffic volume is more than 5,000 vpd, the City Engineer may require that the face-of-curb to face-of-curb width be increased to 52 feet. Residential units fronting onto collector streets require approval of the City Engineer.

4. *Industrial.* A street servicing an industrial/commercial subdivision where a high proportion of truck traffic is expected shall be classified as an industrial street. Industrial streets shall have face-of-curb to face-of-curb width of 48 feet. Additional right of way and pavement shall be provided at intersections for acceleration, deceleration, bus turnouts, and turn lanes, as specified by the City Engineer.

5. *Minor Arterial.* Those roads specified in the City's Streets Master Plan or General Plan as requiring a four lane roadway shall be classified as minor arterials. Minor arterials shall have a minimum face-of-curb to face-of-curb width of 72 feet with a 16-foot wide raised median, as specified by the City Engineer. Additional right-of-way and pavement may be required for bus turnouts and at intersections and driveways for acceleration lanes, deceleration lanes, and additional turn lanes (left or right), as specified by the City Engineer. Additional right-of-way shall also be provided if sidewalks are not part of a landscape corridor adjacent to the back of curb.

Residential units fronting onto minor arterial streets require approval of the City Engineer.

6. *Major Arterial.* Those roads specified in the City's Streets Master Plan or General Plan as requiring a six lane roadway shall be classified as major arterials. Major arterials shall have a minimum face-of-curb to face-of-curb width of 96 feet. Additional right-of-way and/or pavement may be required for bus turnouts and at intersections and driveways for acceleration lanes, deceleration lanes, and additional turn lanes (left or right), as specified by the City Engineer. Residential units fronting onto major arterial streets require approval of the City Engineer.

TABLE 3-1
STREET CROSS SECTIONS and DESIGN PARAMETERS[1,2]

The minimum width of right-of-way and pavement for streets shall be per the following table:

	Minimum Width of Right-of-Way[3]	Minimum Curb to Curb[3]	Planter Width	Sidewalk Width	Traffic Index[4]	Centerline Radius
LOCAL (RESIDENTIAL)	57	35	6	4.5	6	300
LOCAL (PRIMARY RESIDENTIAL)	62	40	6	4.5	6	300
COLLECTOR	66	40	8	4.5/7.5[(6)]	8	500
MINOR ARTERIAL	82	72	[(5)]	4.5/7.5[(6)]	[(7)]	800
MAJOR ARTERIAL	106	96	[(5)]	4.5/7.5[(6)]	[(7)]	800
INDUSTRIAL	58	48	0	4.5	[(7)]	350

Notes:

1. These are minimums which may be increased at the discretion of the City Engineer if traffic warrants a higher value.
2. All dimensions shown in the table are in feet (ft).
3. Widths for bike lanes not included.
4. If soils tests are not available, an R-value of 5 shall be used for pavement design.
5. Planter strips may be required.
6. 4.5' in residential areas, 7.5' in commercial zoning.
7. A classification count shall be conducted and a 20 year TI calculated and approved by the City Engineer. The minimum TI shall be 11.

B. Bikeways: Bike lanes or off-street bike paths may be required on any street based on the adopted Bikeway Master Plan, Community Design Guidelines, a specific plan or the General Plan. Typically all arterial road and collector road corridors will include either on or off street bicycle facilities. When on-street bike lanes are required an additional eight to ten feet (8' to 10') of right-of-way and pavement shall be required. Where an off-street bike path is required, additional right-of-way and pavement requirements shall be determined by the City Engineer.

1. *General.* Bikeways shall be designed in accordance with Chapter 1000, Bikeway Planning and Design, of the Highway Design Manual, as specified in the most recent edition of the Bikeway Master Plan.

2. *Bikeway Locations.* Bikeways shall be planned and constructed only where locations are designated in the City's current Bikeway Master Plan, or as part of a Specific Plan approved by the City.

3. *Bikeway Description.* Bikeways include all facilities provided primarily for bicycle travel. Specific types are defined as follows:

   a. Bike Path (Class I Bikeway). A Class I Bikeway is for the exclusive use of bicycle and pedestrian travel on a right-of-way completely separated from any street with motorized vehicular crossings minimized. The minimum paved width for a bike path shall be eight (8) feet. A minimum two (2) foot wide graded shoulder shall be provided along both sides of the finished bike path for Class 1 Bikeways.

   b. Bike Lane (Class II Bikeway). A Class II Bikeway provides for a striped lane for one-way bicycle travel on each side of a street or roadway. The minimum paved width for a bike lane shall be five (5) feet when there is no curb and gutter and six (6) feet when curb and gutter are present (4' paved and 2' curb and gutter). Bike lane striping shall be discontinuous at all street intersections.

   c. Bike Route (Class III Bikeway). A Class III Bikeway provides shared use with pedestrians on sidewalks and motor vehicle traffic on streets along with bicycles. These routes are established along streets in areas not served by Class I or II bikeways. They provide connectivity to other bicycle facilities. Bike Routes designate preferred routes through high traffic corridors with appropriate signage.

4. *Bikeway Access.* For all Class I Bikeways, access ramps must be a minimum of ten (10) feet wide and shall be designed in all areas to allow two bikes with trailers to pass at any point. Bollards shall be used at all locations where a bikeway (or multi-use path) intersects with or has access to a roadway and at other locations as designated by the City Engineer.

C. Lane Widths (Non-Residential): All areas of new construction shall have a minimum of twelve foot (12') lane widths. In areas of reconstruction of existing streets less than twelve foot (12'), reduced widths may be used when approved by the City Engineer. When travel lanes are adjacent to a median curb, minimum width shall be twelve feet (12'). When travel lanes are adjacent to curb and gutter (without bike lanes), minimum width shall be fourteen feet (14') to the face of curb. All lanes adjacent to bike lanes shall be a minimum of twelve feet (12').

D. Turn Lanes (Lengths and Widths): Right turn lanes shall be required when projected right turn movements are 300 vehicles per hour (vph) or more in the peak hour.

Left turn lanes shall be required at signalized intersections and at intersections of Collectors and Arterial Streets. If the projected left turn movements are 300 vph or more in the peak hour, dual left turn lanes shall be required. The storage length of the turn lane at an intersection shall be a minimum 200 feet (200'). This may be increased or decreased based on a traffic study, but in no case shall it be less than 50 feet (50'). All turn lanes shall have a minimum width of twelve feet (12').

In the case of two-way left turn lanes, the width may be increased due to high speed or to conform to other raised roadway medians.

E. Medians: The standard cross section width for a raised median shall be sixteen feet (16') and shall accommodate a four feet (4') wide median nose with a left turn lane. In areas of high pedestrian use or curb-to-curb street widths (including turn lanes) greater than 80' the median shall be widened to accommodate a six (6') feet wide median nose width for pedestrian refuge, and the adjacent twelve feet (12') wide turn lanes.

Medians that are less than six (6) feet wide and not intended as pedestrian refuge areas shall terminate before the crosswalk. The medians that allow pedestrian refuge shall end just past the crosswalk and provide access through the median.

Median installations when not landscaped shall consist of colored stamped concrete. The color of the stamped concrete shall be approved by the City.

The design and associated patterns imprinted in the surface of the concrete shall be shown on the plans.

Stamped concrete in medians shall be a minimum of four inches (4") thick.

In areas subject to vehicular traffic, stamped concrete shall be a minimum of eight inches (8") thick, and steel reinforced. The required thickness of Class 2 AB under the concrete shall be designed to accommodate the expected loading.

F. Partial Streets: Partial completion of residential streets is not permitted (curb, gutter and sidewalk may be allowed only on one side as an interim measure). On

collectors and arterials, the developer shall, as a minimum, dedicate sufficient right-of-way and construct a 32 foot wide section of pavement with full frontage improvements along the developing property and a two foot (2') wide gravel shoulder on the opposite side with appropriate drainage to meet or exceed requirements. Crown shall be located at the ultimate centerline.

3.07 INTERSECTION ANGLE

Street intersections shall be as near right angles as possible and shall be on tangents not less than 100 feet in length from the intersecting centerlines.

3.08 INTERSECTION SPACING

A. Local Streets: The distance between street intersections on local streets shall not be less than 240 feet or greater than 1,320 feet measured between centerlines.

B. Collector and Arterial Streets: The distance between intersections on collector and arterial streets shall not be less than 660 feet or greater than 1,320 feet measured between centerlines.

C. Signalized Intersections: For new intersections, traffic signal spacing shall not be less than 1,320 feet as measured between centerlines. When intersections are designated by a master plan or traffic study to possibly require a signal, then intersection spacing shall be adjusted to achieve a 1,320 feet spacing.

The spacing between new and existing signalized intersections or a set of existing intersections proposed to be signalized may be reduced based upon submittal and approval of an engineering study. The engineering study shall present the alternative methods of complying with the spacing requirement and compare and contrast the costs, benefits and operational issues associated with a lesser spacing. The study shall be submitted concurrently with the Street Site Plan submittal required by Engineering Design Standards Section 2.04.A.

3.09 RIGHT-OF-WAY AT INTERSECTIONS

The right-of-way line at all intersections shall be along a diagonal cord perpendicular to the centerline of the curb ramp and located so as to provide a four foot (4') sidewalk behind the curb ramp.

3.10 INTERSECTION CURB RADII

The minimum radius at the face-of-curb, based on the classes of the intersecting streets, shall be as specified in the table below. The radii must also meet the turning constraints of the standard B-40 vehicle and other local traffic as applicable subject to approval of the City Engineer.

INTERSECTION TYPE	RADIUS AT FACE OF CURB
Local at Local	25
Local at Collector	30
Local at Arterial	30
Collector at Collector	35
Collector at Arterial	35
Arterial at Arterial	35
Truck Route	50
Industrial at Industrial	50
Industrial at Collector	50
Industrial at Arterial	50

NOTE: Depending on the number of receiving lanes, parking lanes, bike lanes, expected truck volumes, pedestrian volumes, and the use of turning vehicle templates; the City may require increased curb radii, the use of three-centered compound curves, or intersection tapers.

3.11 EXPANDED CORNER GEOMETRICS

See Figure 3A for standard widths and radii of expanded corners.

3.12 CUL-DE-SAC GEOMETRICS

See Figures 3A and 3B for standard widths and radii of cul-de-sacs.

3.13 CUL-DE-SAC LENGTH

Cul-de-sac streets shall not be more than 500 feet in length measured from the center of the connecting street to the radius point of the cul-de-sac.

3.14 SLOPES

Minimum longitudinal gutter slopes shall be 0.5% through all curb returns and cul-de-sac bulbs, and 0.3% in all other areas. The maximum gutter slope shall be 6.0%. Street cross slopes shall be a minimum of 2.0% and a maximum of 4.0%.

3.15 VERTICAL CURVE

Where the change in grade exceeds 2.0%, a vertical curve with a length of 50 feet or more shall be designed.

3.16 CURB, GUTTER AND SIDEWALK

Vertical curb, gutter and sidewalk with driveways shall be used on all streets. Low Profile Curb, Gutter, and Sidewalk may be used in residential areas with monolithic curb. (These typically are in fill areas and will require approval of the City Engineer).

Sidewalks shall be four foot, six inches (4'-6") in all residential and industrial areas and seven foot, six inches (7'-6") in commercial areas. Two feet (2') of width shall be added to any sidewalk that abuts a solid object (i.e., building, soundwall or fence).

Sidewalk barricades shall be required where satisfactory provisions cannot be made for pedestrians to safely continue beyond the terminus of the sidewalk. Where sidewalks end in fill areas, the fill shall be extended beyond the end of the sidewalk at a 6:1 slope and paved with a minimum of 2" AC.

Projects located in the downtown area or other specific plan areas may require enhanced sidewalk treatment in accordance with the Downtown Specific Plan.

3.17 ADA ACCESSIBILITY REQUIREMENTS

A curb ramp shall be installed on all corners of intersecting streets. **All ADA access improvements shall comply with Federal and State laws, rules and regulations.**

The City Engineer will determine ADA upgrade requirements for projects adjacent to existing public roadways. The goal is to achieve ADA accessibility for the length of the frontage on all adjacent public roadways. Reconstruction or repair projects that damage existing pedestrian facilities will be required to reconstruct to current ADA standards.

For intersecting local streets, ramp design shall be as shown in City Detail 0355 or 0357.

For T-intersections of local streets, at least one receiving ramp shall be installed on the far side of the through street. For all T-intersections with a collector or arterial street, ramps shall be installed as directed by the City Engineer.

All ramp designs shall **comply** with the**se standards and the Caltrans** Standard Plans.

3.18 DRIVEWAYS, SITE ACCESS

Backing of vehicles out of driveways onto the roadway shall only be permitted for single family residential or duplex land uses. Other land uses shall be designed so both entering and exiting vehicles are traveling forward.

Driveways shall be located to provide at least five feet (5') clearance between the edge of the driveway and appurtenances such as fire hydrants, poles, utility structures and curb inlets.

A. Location and Spacing: Driveway cuts in vertical curb shall have a minimum separation of five feet (5') at face of curb.

New driveways shall be a minimum of 75 feet from the intersection measured from the projected gutter flow line of the parallel street to driveway center line, two feet (2') from any property line at face of curb, and five feet (5') from any fire hydrant curb inlet or other facility. An exception may be made where a local street intersects a local or collector street. In this case, the minimum distance from the intersection shall be 36 feet measured from projected gutter flow line of the parallel street.

On streets intersecting arterial or collector streets, the driveway shall be located as far from the intersection as practical, subject to City Engineer approval.

In residential districts, driveways shall be located to allow at least 25 feet of curb frontage per lot.

In non-residential areas, driveways shall be separated by a minimum of 100 feet on local streets, 150 feet on collector streets, and 250 feet on arterial streets.

Driveways shall not be located on roadway corners for all uses or on expanded corners in commercial or industrial uses. Exceptions will be considered on a case by case basis.

B. Width: Single-family residential and duplex driveways shall have a minimum throat width of 12 feet and maximum throat width of 24 feet at back-of-walk.

Multiple-family and commercial/industrial driveways shall have a maximum throat width of 40 feet at back-of-walk.

Apartments, condominiums, schools, churches, commercial or industrial properties shall require City Standard "Commercial" or "Industrial" driveways.

C. Number of Driveways: For single family residential land uses, only one driveway per parcel will be permitted, except where circular drives are proposed and approved by City Engineer. Two driveways will be permitted for duplex parcels.

The maximum number of driveways for a non-residential parcel shall be:

STREET FRONTAGE LENGTH (FT)	MAXIMUM NO. OF DRIVEWAYS*
up to 100	One
101 to 400	Two
over 400	>two shall require City Engineer approval

** For corner lots, the maximum number of driveways to the site shall be reduced by one if corner distance standards cannot be met.*

The maximum number of driveways indicated above may be reduced by requiring that driveways be located at the common property line of adjacent parcels.

Consolidation of driveways with adjacent parcels shall occur whenever possible. Where driveway location standards cannot be met for a parcel, the City may require access to that parcel is achieved via cross-access over an adjacent parcel.

D. Right Turn Deceleration/Acceleration Lanes for Driveways: A right turn deceleration lane shall be provided for driveways under the following conditions:

1. The driveway is located on an arterial or expressway.

2. Right turn ingress volume is expected to exceed fifty during peak hour flows on the roadway. For right turn ingress volumes between ten and fifty, a right turn curb taper shall be required.

3. There is ample room and frontage to fit a deceleration lane as determined by the City Engineer.

4. The travel speed of the roadway, as determined by the City Engineer, equals or exceeds 45 mph.

There may be cases where some of the above criteria are not met, whereupon the City Engineer may still require a deceleration lane in the interest of safety.

There may be cases where it will be necessary to merge a deceleration lane with an existing acceleration lane. Where the beginning of a deceleration taper will be within 100 feet of the end of an acceleration taper, then the deceleration and acceleration shall be merged to form a continuous auxiliary lane.

In cases where it is desirable to provide room for right turn deceleration, but an entirely separate deceleration lane is infeasible due to design constraints, a right turn curb taper shall be provided.

E. Left Turn Deceleration/Acceleration Lanes for Driveways: Left turn deceleration lanes (left turn pockets) are not required on collector or residential streets.

On arterials and where left turns in will be permitted, a left turn deceleration lane shall be provided. This may be in the form of a separate left turn pocket on a four (4) or six (6) lane road. Depending on land use, traffic volumes, and driveways, a continuous two-way-left-turn-lane may be considered on a four (4) lane road with approval of the City Engineer. In the absence of a traffic study, or if one is determined not to be necessary, the pocket shall be 200 feet in length with a 90 foot bay taper. The length of the left turn pocket may be increased or decreased based on a traffic study. However, in no case shall it be less than 50 feet.

F. Restricted Turning Movements for Driveways: Turning movement restrictions shall apply to unsignalized driveways off of arterials and expressways and may be restricted for any driveway where deemed a safety concern by the City Engineer.

G. Signalized Driveways: The need for signalized driveways shall be based on warrants contained in the latest edition of the California MUTCD. Any such evaluation shall be performed by the consultant as part of the project traffic study.

H. Minimum Required Throat Depth: Driveways shall meet the minimum required throat depth (MRTD) requirements as defined in Table 3-2. In the case of "drive-thru" facilities, attention is directed to Table 3-2 for minimum on-site storage distances for entering vehicles. Distance shall be measured starting at the back of walk in the public right of way.

On-site parking shall not be permitted within the MRTD area. The MRTD requirement does not apply to single family residential or duplex land uses.

Table 3-2 shall be used to determine MRTD for access points for a site, unless by determination of the City Engineer a traffic study is required to determine the MRTD. The distances shown in Table 3-2 chart represent vehicle storage equivalents, which means the total required distance may be achieved by summing the throat depths for several access points if more than one access point is to serve the site. In these cases, the distance shown in Table 3-2 shall be prorated to each access point to the nearest 25 feet based on the estimated relative percent usage of each. However, the MRTD for any location shall be 25 feet.

TABLE 3-2
MINIMUM THROAT DEPTH

LAND USE	SIZE	STREET RIGHT-OF-WAY		
		<60'	60'	>60'
Apartment, Condos, Mobile Homes, Planned Unit Development	0 - 80 units	25'	50'	50'
	81 - 160 units	50'	50'	50'
	>160 units	50'	50'	100'
Restaurants	0 - 15,000 SF	25'	25'	25'
	>15,000	25'	25'	50'
High Turnover / Sit Down Restaurant	0 - 8,000 SF	25'	25'	25'
Drive-Thru Restaurant	0 - 2,000 SF	25'	25'	25'
	2,001 - 3,000	25'	50'	100'
	3,001 - 5,000	50'	75'	150'
	>5,000	75'	100'	225'
Motel	0 - 150 rooms	25'	25'	25'
	151 - 400	25'	75'	125'
	>400	25'	125'	175'

TABLE 3-2 MINIMUM THROAT DEPTH				
LAND USE	**SIZE**	**STREET RIGHT-OF-WAY**		
		<60'	**60'**	**>60'**
Convention Hotel	0 - 150 rooms	50'	50'	100'
	151 - 400	50'	150'	250'
	>400	50'	250'	350'
Office Park	0 - 20,000 SF	25'	25'	25'
	20,001 - 50,000	25'	50'	75'
	50,001 - 100,000	25'	75'	175'
	100,001 - 150,000	75'	125'	250'
	150,001 - 300,000	125'	250'	500'
	>300,000	200'	400'	825'
General Office	0 - 50,000 SF	25'	25'	50'
	50,001 - 100,000	25'	50'	100'
	100,001 - 150,000	50'	75'	175'
	150,001 - 200,000	50'	100'	225'
	200,001 - 300,000	75'	175'	350'
	300,001 - 400,000	125'	225'	450'
	>400,000	150'	275'	575'
Light Industrial	0 - 100,000 SF	25'	25'	50'
	100,001 - 200,000	25'	50'	100'
	200,001 - 300,000	50'	75'	150'
	300,001 - 400,000	50'	100'	200'
	>400,000	75'	125'	250'
Industrial Park	0 - 500,000 SF	25'	25'	50'
Big Box Retailer	0 - 30,000 SF	25'	25'	25'
	30,001 - 50,000	25'	50'	75'
	50,001 - 75,000	25'	50'	125'
	>75,000	50'	75'	175'

TABLE 3-2 MINIMUM THROAT DEPTH				
LAND USE	**SIZE**	**STREET RIGHT-OF-WAY**		
		<60'	**60'**	**>60'**
Shopping Center	0 - 10,000 SF	25'	25'	50'
	10,001 - 2 0,000	25'	50'	125'
	20,001 - 30,000	50'	100'	175'
	30,001 - 40,000	75'	125'	225'
Shopping Center (cont.)	40,001 - 100,000	75'	150'	250'
	100,001 - 150,000	100'	175'	375'
	150,001 - 200,000	125'	250'	500'
	200,001 - 250,000	150'	300'	625'
	250,001 - 600,000	175'	375'	750'
	600,001 - 700,000	200'	375'	750'
	700,001 - 800,000	225'	425'	875'
	800,001 - 900,000	250'	500'	975'
	900,001 - 1 million	275'	550'	1075
	>1 million	425'	825'	1625'
Drive-in Bank	0 - 10,000 SF	25'	25'	50'
	10,001 - 20,000	50'	50'	200'
	20,001 - 30,000	75'	150'	300'
	30,001 - 40,000	100'	200'	400'
	>40,000	150'	250'	500'
Supermarket	0 - 20,000 SF	25'	25'	50'
	20,001 - 30,000	25'	50'	75'
	30,001 - 40,000	25'	50'	100'
	>40,000	25'	75'	150'
Medical Clinic	0 - 100 employees	25'	25'	50'

3.19 LATERAL CLEARANCE

A lateral clearance of two (2) feet from face-of-curb to any fixed object (except sign posts of an approved breakaway or yielding design) shall be maintained at all times.

3.20 EASEMENTS

PUE's shall be in accordance with the subdivision ordinances and as determined by the City Engineer.

3.21 SIGNING AND STRIPING

Signing and striping plans shall include all pavement markings and markers and roadway signing, as required by these Engineering Standards and the California MUTCD. All pavement markings and striping shall conform to Section 16, Construction Specifications.

A. Pavement lines: Details to be used are: 4, 7, 10, 13, 17, 20, 23, 25, 25A, 30, 33, 38, 39, 39A, 40, and 40A from Caltrans Standard Plans. The use of other details will be allowed or as directed by the City Engineer.

B. A current copy of the City of Woodland signing and striping uniform practices can be obtained at no cost from the Community Development Department.

3.22 VALLEY GUTTERS

Valley gutters will not be allowed within the public right-of-way or public easement unless otherwise approved by the City Engineer.

3.23 BUS TURNOUTS

Bus turnouts shall be provided at all bus stops on arterial streets, and at all other locations as directed by the City Engineer. Bus Stop locations will be approved by Yolo County Transportation District. Space for bus turnouts shall be provided outside of the travel lane, bike lane and shoulder of the road. The design of the bus turnouts shall comply with Detail 0343 of these standards

The shelter and pad shall be located within the last 60 feet of the bus turnout. Bus shelters and shelter pads shall comply with Detail 1200 of these standards.

3.24 STREET NAME SIGNS

Street name signs shall be High Intensity Prismatic Type III sheeting with green background and white lettering. Sign height shall be 9". Sign lengths will vary between the minimum 24" and the maximum 48" with lengths increasing in increments of 6" based upon the length of the street name.

Lettering shall be 6" uppercase and 4½" lowercase and street suffix lettering shall be 3" uppercase. Minimum spacing of the lettering shall not be less than ½". Lettering shall be Series D, except when the length of the name is too long for a 48" sign plate. In this case, with City approval, the lettering may be narrowed to accommodate the sign length.

Street name signs shall be detailed on the plans.

A. Location and Number Required: The required number of street name signs and location depends on the street right-of-way width and shall be as follows:

Case 1 – Arterial or Collector Streets: At each intersection where one or both of the intersecting streets are a collector or arterial, two (2) street name sign assemblies, with four (4) sign plates on each post, are required.

At four-way intersections, the signs shall be located on both far right hand corners of the intersection relative to the direction of travel on the street having the greater right-of-way width or on the major street if right-of-way widths are equal.

At "T" intersections, one sign shall be installed on the far right hand corner of the intersection relative to the direction of travel on the through street, and the other shall be installed along the left side of the through street relative to the direction of travel at a point directly opposite the centerline of the intersecting street. One sign plate should be omitted from the standard four-plate installation at the "T" intersection sign locations where an approach street does not exist.

At new "T" intersections with no stop control, existing light poles shall be utilized for the installation of signs where possible.

Signs shall be located adjacent to the major street at the end of the curb return.

Case 2 – Residential Streets: At each intersection where both of the intersecting streets are residential streets, one (1) street name sign assembly (with four sign plates on each post) is required.

At a four-way intersection, the installation shall be located at one of the far right hand corners of the intersection relative to the direction of travel on the street having the greater right-of-way width or on the major street if the right-of-way widths are equal.

At a "T" intersection, the installation shall be located on the far right hand corner relative to the direction of travel on the through street.

At new "T" intersections with no stop control, existing light poles shall be utilized for the installation of signs where possible.

Signs shall be located at the midpoint of the curb return.

Case 3 – Street Name Changes at Intersections: At intersections where the street name or suffix changes at the intersection, additional signage is required. Where possible, signs shall be flag mounted on one pole indicating the name or suffix change by orienting the flagged sign in the direction of the corresponding street. Alternatively, additional sign posts may be required.

B. Advance Street Name Signs: On arterial streets, advance street name signs shall be mounted in advance of intersections with arterial or collector streets. On collector streets, they may be required at the discretion of the City Engineer in advance of intersections with arterial streets, or signalized intersections.

Whenever possible, advance street name signs shall be mounted in advance of intersections per the table below. However, advance signs shall not be posted where any street will intersect the main street prior to the street named on the advance sign:

SPEED LIMIT IN MPH	DISTANCE IN ADVANCE OF INTERSECTION IN FEET
25	150 - 200
30	200 - 250
35	250 - 275
40	300 - 350
45	375 - 425
50	450 - 500

Exceptions to the distance requirements may be approved by the City Engineer.

No advance street name signs shall be placed between intersections that are spaced at a distance of 200 feet or less when measured curbline to curbline unless approved by the City Engineer.

C. Signalized Intersections: Mast-arm street name signs shall be required for all approaches. These signs shall have a minimum lettering size of eight inches (8") uppercase and 6" lowercase with type D stroke-width. The signs shall be double sided. The signs shall have a visual reflectivity equal to V.I.P. diamond grade.

3.25 NO PARKING SIGNS

Along new streets where parking is prohibited, the following table shall be used to determine size, type and maximum spacing for No Parking Signs.

SPEED LIMIT (MPH)	MAXIMUM SPACING	SIZE	TYPE
≤ 30[1]	100'	12" x 18"	R26 R28
	200'	18" x 24" [2]	R26 R28
35, 40	500'	24" x 30"	R26A[3] R28A
≥ 45	600'	24" x 30"	R26A[3] R28A

(1) Large signage is not permitted in residential areas with homes fronting the street.

(2) May be used only with prior written approval from the City Engineer
(3) Where two or more lanes of travel are in the same direction, use R26A at appropriate spacing.

Other No Parking sign situations will be approved by the City Engineer.

3.26 ROUNDABOUT SIGNS

All signs placed in the center island or on splitter islands of roundabouts must be mounted on breakaway posts. All signs and sign placement for roundabouts will be as directed by the City Engineer.

3.27 TRAFFIC CALMING FEATURES

Traffic calming features shall be included on the plans.

3.28 FIGURE 3A – GEOMETRICS OF EXPANDED CORNERS AND CUL-DE-SACS

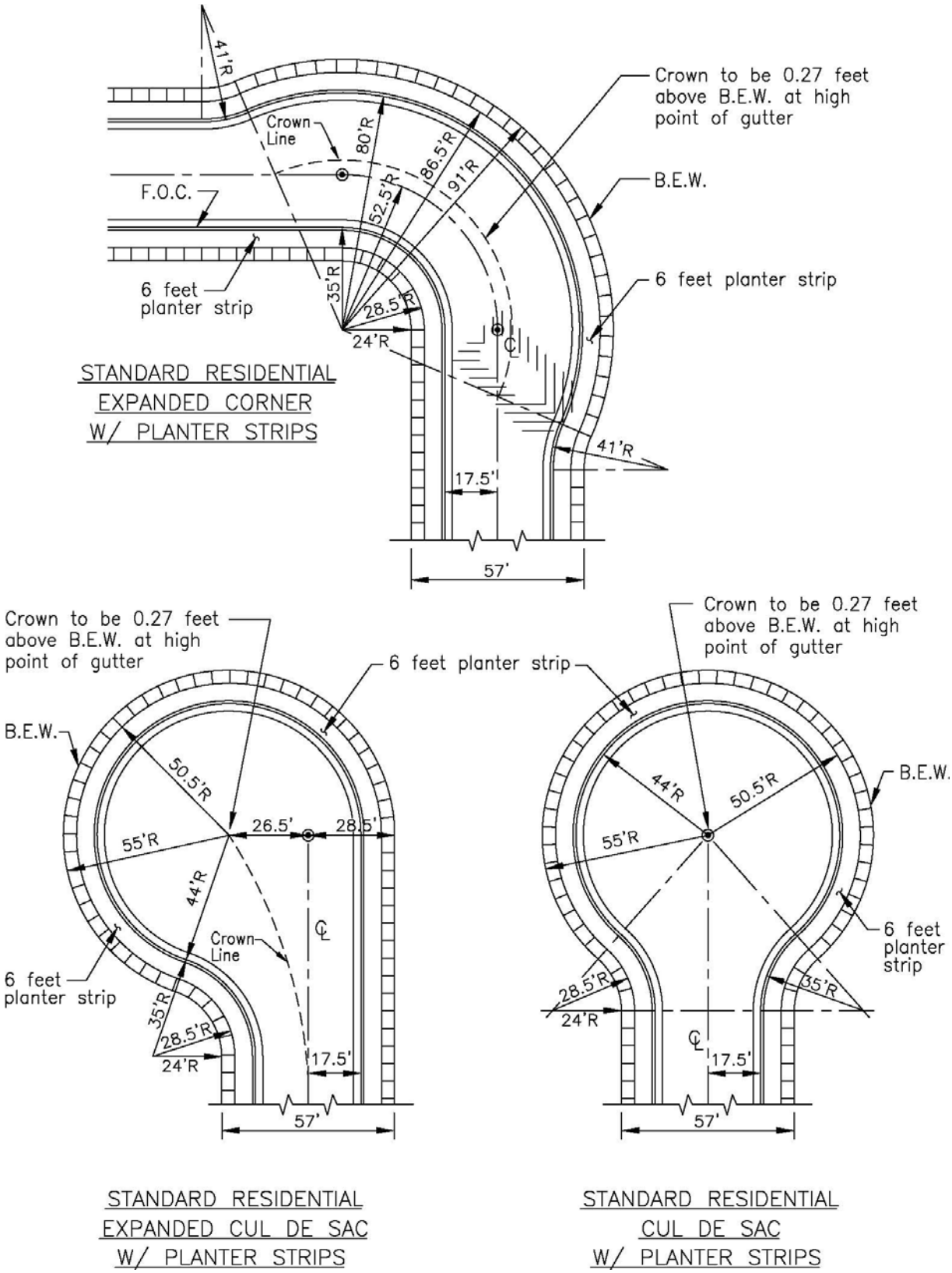

3.29 FIGURE 3B – SQUARE CUL-DE-SACS

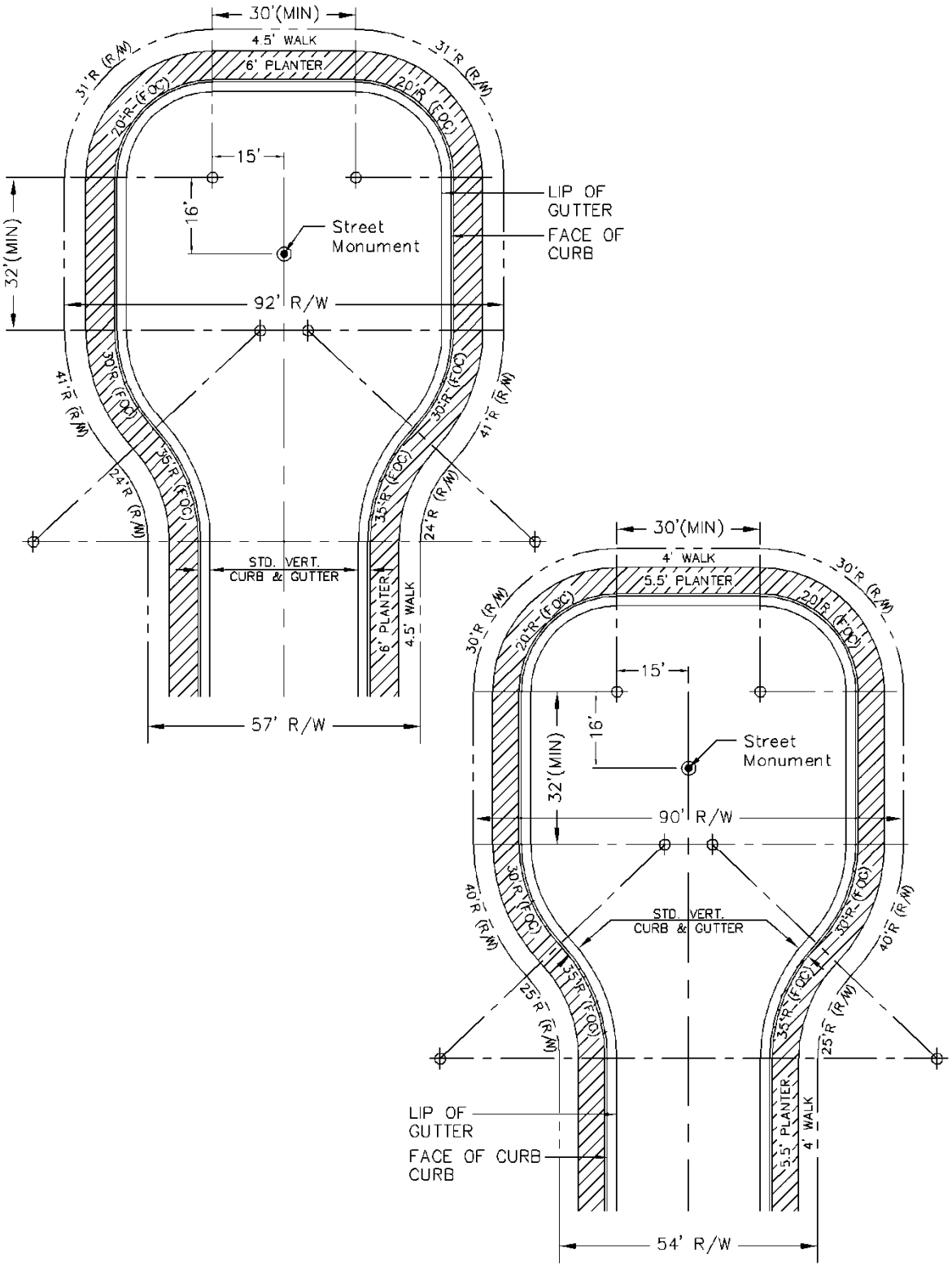

{Blank Page}

SECTION 4: STORM DRAINAGE SYSTEM DESIGN

4.01 GENERAL

Storm drainage improvements shall be designed to serve the ultimate development level as defined in the current City General Plan and the current Storm Drainage Master Plan. Comply with the Yolo County City/County Drainage Manual, April 2009, for situations not covered by this section.

Although these standards are intended to apply to physical development within the City, the standards will not apply for all situations. Compliance with these standards does not relieve the Developer of the responsibility to apply conservative and sound professional judgment. These are minimum standards and are intended to assist, but not substitute for competent work by design professionals. The Utility may, at its sole discretion due to special conditions and/or environmental constraints, require more stringent requirements than would normally be required under these standards.

A drainage system which includes unreasonable and intensive maintenance or operational requirements as determined by the City shall be rejected in favor of a drainage system which does not place an excessive burden on the owner/operators of such system.

The Applicant may propose a deviation from the Standards. A non-standard system may take longer to review. The Applicant acknowledges these risks when submitting a non-standard system for review.

The City's decision to grant, deny, or modify the proposed deviation shall be based upon evidence that the deviation request meets the following criteria:

A. The change will achieve the intended result through a comparable or even superior design; and
B. The change will not adversely affect safety and/or operation; and
C. The change will not adversely affect maintainability.

4.02 PLAN REQUIREMENTS

All storm drainage improvement plans shall show geometric designs including plan and profile views, utility crossings, catch basins, laterals, manholes and invert elevations at all structures. In addition, the hydraulic grade line shall be shown on the storm drain profile

In addition to the above, design computations for all drainage system projects shall include the following information:

A. Topographic Drainage Shed Map:

1. Topographic map showing existing and proposed ground elevations and total and sub-shed areas in acres.

2. Quantity of flow in cubic feet per second (cfs) to each structure with corresponding area that generates the quantity.

3. Quantity of flow (cfs) in each pipe.

4. Flow line elevation of manhole or structure.

5. Average groundwater elevations.

6. Top of structure elevation.

7. Hydraulic grade line elevation at each structure.

8. Hydraulic gradient.

9. Pipe size, class, length and slope.

(Items 6 & 7 are not required when design is based on hydraulic grade line inside conduit).

B. HEC 1 and HEC 2 Data:

All HEC 1 and HEC 2 support data for major pipe and channel locations.

C. Table of Values:

A Table of Values, with neat and legible calculations, demonstrating all required information in sections 4.02A and 4.02B have been considered.

4.03 FACILITIES CLASSIFICATIONS

For the purpose of presentation and design, the following classifications will be used in defining storm drainage facilities:

A. Minor: Drainage facilities receiving runoff from an area of less than 30 acres shall be called a minor system.

B. Trunk: Drainage facilities receiving runoff from an area of 30 acres or larger shall be called a trunk system.

C. On-Site Drainage: Drainage facilities needed to carry runoff within the development, excluding trunk drainage conduits, facilities draining public streets, and facilities draining concentrated flow from other properties shall be called on-site drainage.

4.04 DESIGN CAPACITIES

Drainage facilities shall be designed to accommodate the future development of the entire upstream watershed. The future development shall be defined as full build-out of the General Plan Land Use Designations.

The capacity design criteria for storm drainage facilities are as follows:

A. Storm Drain: Closed conduit storm drain systems shall be designed to convey the ten (10) year storm event while maintaining the hydraulic grade line at least one (1) foot below the elevation of inlet grates and manhole covers.

B. Open Channel: Open channels shall be designed to convey the 100-year storm event while maintaining at least one (1) foot of freeboard in cut sections and three (3) feet of freeboard in levied sections.

C. Bridges: Bridges shall be designed to pass the 100-year storm while maintaining a minimum of one (1) foot of freeboard to the low chord.

D. Culverts: Culverts shall be designed to pass the channel design capacity while meeting freeboard requirements.

E. Regional Storage Facilities: Regional storage facilities shall be designed to contain or attenuate the appropriate long duration 100-year storm event and to comply with State Division of Safety of Dams requirements. The storm duration shall be greater than the lag time of time of concentration for the entire watershed utilizing the regional storage facility. Long duration storms (i.e., 3-, 5-, and 10-day 100-year events) shall be evaluated and compared to the 24 hour 100-year storm event, to determine whether runoff volume or peak discharge is of the most importance, while maintaining at least three (3) feet of freeboard in the facility and without creating excessive backwater effects on the tributary storm drainage system. Storage facilities shall be designed according to Figure 4A.

For planning purposes, the surface areas for regional storage facilities will include a 20-foot buffer containing a 15-foot perimeter road and minimum side slopes of 4:1. The storage facilities shall be configured to provide the necessary storage while maintaining at least three (3) feet of freeboard in the facility and without creating excessive backwater effects on the tributary storm drainage system. Storage facility inlets and outlets shall have galvanized steel grates with vertically slanted bars at six-inch (6") spacing. Target outflows from the storage facilities will be established based upon an economic analysis of the cost for a pump station at the storage facility, the main pumping plants and the cost of detention.

F. Roof, Footing and Yard Drains: Roof and footing drain pipes shall be separate lines which may only be joined as a non-perforated pipeline at an elevation at least one (1) foot below the lowest footing drain invert elevation. The minimum cover over the storm drain stub at the property line shall be two (2) feet. Clean-outs (4-inch minimum diameter) with factory manufactured fittings shall be provided at all junctions and bends greater than 45 degrees. The maximum spacing between clean-outs shall not exceed 100 feet. Roof, footing and yard drains shall not be connected to the sanitary sewer system. Roof, footing and yard drains shall not be located within the public right-of-way except where connecting to the municipal drainage system. Roof, footing and yard drain systems serving more than one parcel shall be within private utility easements. Corrugated polyethylene tubing (CPT) may not be used in the Right-of-way, or for any other purpose except as a privately owned and maintained overbank drain.

Maintenance: Roof, footing and yard drainage systems, drainage systems on commercial and multifamily properties, drainage facilities within private easements, and drainage facilities otherwise denoted as private, shall be designed to provide access for maintenance and operation by the owners of such facilities.

4.05 STORM DRAINAGE CALCULATIONS

Three methods of estimating design storm drainage flows are allowable. Methods, applications and locations of additional information are summarized in Figure 4A.

Storm drainage system design calculations are to be submitted to the City in bound form and in electronic form (Microsoft Excel format). Submittals are to be signed by an appropriately registered engineer. Calculations using the Rational Method shall be submitted on standard forms (see Figure 4F) and on computer disk in Excel format, for all storm drainage improvements including trunk lines, laterals, curb inlets and open channels proposed in connection with new development projects.

The calculations based on the Rational Method for infill development areas limited up to 640 acres shall be as follows:

The Rational Method equation has the form: $Q = CiA$

Where:

Q = rate of runoff, acre-inches per hour or cubic feet per second (acre-inch per hour = 1.008 cubic feet per second, a negligible difference);

C = runoff coefficient, which is the ratio of peak runoff to average rainfall intensity;

i = average rainfall intensity, inches per hour; and

A = drainage area, acres.

The Rational Method shall be applied using the procedure outlined below.

A. Basic Information Preparation: Layout the proposed storm sewer system and delineate the sub-basins tributary to points of concentration for the design of inlets, junctions, pipelines, etc. Delineate the land uses and hydrologic soil groups within each sub-basin.

B. Runoff Coefficient Determination: The runoff coefficients, C, for a storm having a 10-year recurrence interval are presented in Figure 4G by land use designation and hydrologic soil group. The 10-year runoff coefficients are used with the frequency factors presented in Figure 4H for design storm frequencies other than the 10-year. The frequency factor adjusts the 10-year C for changes in infiltration and other losses with a change in storm frequency. The C value in Figure 4F is the weighted average of the C values for the sub-areas within the system being designed. Figure 4I shows a sample calculation form for weighted average C computations for a basin.

C. Time of Concentration Determination: The time of concentration or the travel time is the time required for runoff to flow from the most upstream point of the drainage area through the conveyance system to the point of interest. The travel time is calculated by dividing the length of the conveyance system component by the corresponding velocity of flow. The travel time, T_c, is computed as follows:

$$T_c = T_o + T_g + T_p + T_{ch}$$

Where:

T_o = overland flow time of concentration;
T_g = gutter flow travel time;
T_p = pipe flow travel time; and
T_{ch} = channel flow travel time.

The equation used to compute the travel time for each conveyance component is described below.

D. Overland Flow: The recently developed Kinematic wave empirical equation based upon available SCS, COE, and FAA overland flow data (Papadakis, 1987) is:

$$T_o = \frac{0.66\ L^{0.50}\ n^{0.52}}{S^{0.31}\ i^{0.38}}$$

Where:

T_o = overland flow time of concentration, minute;

L = overland flow length, ft, should generally be in the range of those specified in Figure 4J;

n = roughness coefficient for overland flow (Figure 4J);

S = average slope of flow path, ft/ft; and

i = intensity of precipitation, in/hr (Figure 4K).

Use of the overland time of concentration equation requires an iterative approach: an initial estimate of the time of concentration updated by successive estimates of precipitation intensity.

To assure consistent and reasonable values are used to calculate the total time of concentration, Figure 4L presents maximum times of concentration for commercial and residential areas and a range of times of concentration for open space. Land use applies only to the most upstream reach of the basin, prior to entering the street.

E. Gutter Flow: Manning's equation for a triangular channel cross section is used to determine the flow velocity and travel times for street gutter flow. The average distance from the overland flow surface to the nearest inlet is divided by flow velocity to obtain street gutter flow time. The gutter flow equation was derived using the following assumptions:

- The cross slope of the street is 0.02 ft/ft.
- The flow in the gutter is six inches deep and contained by the curb.
- The street surface is smooth asphalt or concrete.

The velocity of flow in the gutter is computed by the equation:

$$V_g = \frac{1.12}{n} S_x^{0.67} S^{0.50} T^{0.67}$$

Where:

V_g = velocity of flow in the gutter, ft/s;

S_x = street cross slope, ft/ft, design value = 0.02;

S = street longitudinal slope, ft/ft;

T = spread of flow in gutter = d/S_x, ft;

d = depth of flow in the gutter, ft, design value = 0.5 ft;, and

n = Manning's "n" for pavement, design value = 0.02.

F. Pipe Flow: Manning's equation can also be used to determine travel time of flow through pipes. Travel time is usually calculated by assuming full pipe flow. Flow velocity is calculated with the equation:

$$V = \frac{1.49}{n} R^{0.67} S^{0.50}$$

Where:

V = velocity in pipe, ft/s;

R = hydraulic radius, D/4 for full pipe flow, ft;

D = diameter of pipe, ft;

S = slope, ft/ft; and

n = Manning's "n", design value = 0.015.

G. Trapezoidal Channels: A modified Manning's equation is used for open channel flow to derive the velocity for trapezoidal grass-lined channels. The following assumptions were made in the derivation of the modified equation:

- Channel side slopes are 1:3.
- Channel bottom width equals the depth.
- Top width is seven times the bottom width.

$$V = \frac{0.995}{n} b^{0.67} S^{0.5}$$

Where:

V = velocity, in ft/s;

b = bottom width, ft;

n = Manning's "n" for channel flow (Figure 4B); and

S = slope, ft/ft.

H. Intensity Determination: The rainfall intensity shall be determined from Figure 4N using the computed time of concentration.

4.06 NON-REGIONAL DETENTION PONDS

These ponds are required in order to reduce peak flows in certain areas and may be considered or required on a case-by-case basis by the City Engineer for sites which cannot be adequately served by existing storm drains. Temporary detention ponds may be designed for use while permanent storm drainage facilities are being completed. Figure 4M lists standards for non-regional detention ponds.

The specific design elements for the detention ponds shall be established on a case-by-case basis. The design will vary depending upon whether or not the particular pond is permanent or temporary, or is a dual or multi-purpose facility, with drainage, water quality, and possibly recreational components. Detention ponds shall be designed according to Figure 4M and State Division of Safety of Dams.

Ponds shall be designed with spillway features to conduct excess flows into streets. Overland flow through streets shall not adversely impact areas downstream.

4.07 STORM DRAINAGE PUMP STATIONS

To the extent practicable, storm drainage pump stations shall be avoided. In unavoidable cases, a pump station may be considered for ownership by the City after submission of a detailed engineering report documenting reasons for proposing a pump station. This report shall establish that there is significant benefit to the City in building a pump station to serve the proposed tributary area. This report shall be submitted to the Public Works Department for a final decision whether to accept the need for a pump station. Public ownership of approved pump stations shall be at the discretion of the Public Works Director or an authorized representative. Where inlets and outlets are separate, water to be conveyed through the ponds in closed conduits or channels to minimize maintenance and nuisances.

A. Regional Storage Facility Pump Stations:

Each storage facility pump station shall be designed to discharge the design capacity (target outflows) using two mixed flow vertical or axial pump and motor units. A third pump and motor unit of equal size will be included as a backup to provide an installed pumping capacity of one and one-half times the design capacity of the drainage system.

A minimum ten horsepower pump and motor will be incorporated into the pump station to discharge runoff during the summer months. The summer flow pump will be omitted where the design pump rating is less than 20 horsepower.

The sump for each pump station shall be sized according to the most recent edition of the Hydraulic Institute Standards for Centrifugal, Rotary & Reciprocating Pumps. Stormwater shall be conveyed from storage facility(ies) into the sump through an open inlet section. Before entering the pump vault, stormwater shall pass through a power-driven catenary trash rack system. As required, the invert of each sump shall be lower than the invert of the permanent (water quality) pool for the respective pond, so storage facility(ies) can be completely drained through the pump stations to facilitate maintenance.

Typically, each pump shall discharge into a separate discharge pipe that includes a combined siphon breaker, air relief valve and vault at the high point on the discharge pipe, and a flap gate with headwall at the terminal structure in the drain. Where discharge lines tend to be long (over 200 feet) or where the discharge line must cross under existing drains, roads, or railroads, the discharge line will be manifolded for discharge through a single pipeline.

Electrical control equipment shall be enclosed in a waterproof masonry or prefabricated metal building on a concrete foundation. The electrical equipment shall include pump controls, a water-level detection system, a float switch for sump high-water alarm and low-water automatic shutoff, a solenoid-controlled automatic pump motor oiler, and a telemetry system. In addition, the building shall be equipped with

two doors, wall louvers, a rotary turbine roof vent, interior and exterior lighting, and a space heater.

Backup power for each pump station shall be provided by on-site diesel generators. Each generator shall be sized to supply power to the drainage pumps running at design capacity, as well as to the electrical control equipment, lighting, and electrical building space heater. The generators shall be radiator-cooled and skid-mounted, and shall include a heater, batteries, battery charger, control panel with auto-start, critical silencer, and generator circuit breaker. Both the diesel generator and fuel storage tank shall be placed on a concrete pad. The fuel tank shall also be provided with a secondary containment structure. In-lieu of a separate storage tank, the fuel supply may be provided in a sub-base tank as part of diesel/generator unit. Storage volume shall be greater than or equal to that required for a 24 hour run time.

The pump station sites shall be enclosed by a six-foot (6') high chain link fence topped with three strands of barbed wire. The fencing shall include a 20-foot wide double-driven gate and a 3-foot (3') wide pedestrian gate. The pump station lot shall be sized and the sump, electrical control building, diesel generator, and PG&E transformer arranged for adequate operating space for vehicles and pump and motor removal equipment. The paved access yard shall be elevated approximately one foot (1') above the high point of the natural ground surface at the site, and shall be sloped to provide adequate on-site drainage.

4.08 MAIN DRAINAGE SYSTEM PUMP STATIONS

A main drainage system pump station is defined as a pump station located on a storm drainage trunk line or channel. The basis for the preliminary design and layout of the main drainage system pump stations, including the sump, outlet works, electrical controls, backup power, and site improvements is similar to that used in Section 4.07 and 4.07A with the exception that additional pumps shall be included as backup to provide an installed pumping capacity of one and one-quarter times the design capacity.

4.09 SEEPAGE IN TO/OUT OF DETENTION PONDS AND OPEN CHANNELS

The seepage of groundwater into or out of the detention ponds and open channels shall be evaluated based upon available groundwater information and driller logs to determine if inflow of groundwater into drainage facilities would affect design capacities or operations.

4.10 HORIZONTAL ALIGNMENT

Storm drainage lines shall be parallel with the centerline of streets, with the centerline of the pipe 1.25 feet from the face-of-curb away from the street. Large angular changes over five degrees (5°) in the alignment of storm drains are not allowed.

4.11 HYDRAULIC GRADE LINE

Hydraulic grade lines shall be a minimum of one-foot (1') below the elevation of inlet grates and manhole covers and shall be shown on improvement drawings.

4.12 CURB INLETS

The spacing of storm drain inlets shall not exceed a maximum of 500 feet. Drainage inlets shall be located to prevent surface flow through street intersections. Stormwater inlets in a roadway shall be located in the curb line and shall be fitted with bolt locking vane grates. For any roadway drainage structure located out of the curb line and in a travel lane, a 24-inch, bolt locking ring and cover shall be installed. A through-curb inlet frame shall be used where conditions limit the effectiveness of a flat grate inlet. Examples of such conditions limit the effectiveness of a flat grate inlet. Examples of such conditions are where a high likelihood of clogging from leaf fall or other debris exists, in sag vertical curves, intersection curb returns, and when the structure is a surface drainage end point, such as in a cul-de-sac. Bi-directional vane grates shall be used in sag vertical curves.

4.13 STORM DRAINAGE PIPE

Storm drainage pipe shall be reinforced concrete pipe or non-reinforced concrete pipe as specified in Section 11.02, Construction Specifications. Other types of conduit (arch culvert, box culvert, etc.) will be considered upon submittal to City Engineer.

CIPCP is not an allowable pipe material.

4.14 COVER

All pipes shall be constructed with a minimum cover of two feet (2'). In any instance where the distance from the paving surface to the top of pipe is less than 24 inches, a six-inch (6") thick reinforced concrete slab shall be placed over pipe for protection (slab to overlap pipe on each side by 12 inches min.)

4.15 MANHOLES

Maximum spacing between manholes shall be 500 feet for pipe sizes of 48 inches and under and 800 feet for pipes of 54 inches and larger. When a catch basin, manhole, or concrete inlet is located off the traveled portion of the roadway or under other conditions of limited surveillance, the grate or cover shall be bolt locking. Vertical ladders or steps shall be installed immediately under the cover or grate opening to a walkable surface on all structures exceeding four feet deep in the pipe invert.

Manholes shall be located at all changes in pipe sizes or slopes, at angles greater than twenty degrees (20°) and at all lateral connections. A curb inlet shall be sufficient as a manhole when the connecting upstream lateral serves only one additional curb inlet. Manholes shall be required at the junction of all lines, except at curb inlets as described.

Upon approval by City Engineer, site drainage laterals under eighteen inches (18") in diameter may be directly connected into mains thirty inches (30") or larger in diameter. Details for storm drainage lateral connections to a main storm drain line without a manhole design shall be provided to the City Engineer for approval.

Crowns of pipe shall match in elevations at manholes. Curb inlets may be considered as manholes if provided with a forty-eight inch (48") diameter or larger riser barrels. See Standard Details for a curb inlet manhole design.

On curved pipes with a radius of 200 feet to 400 feet, manholes shall be placed at the beginning of curve (B.C.) and ending of curve (E.C.) and at 300 foot maximum intervals along the curve. On curves with a radius exceeding 400 feet, manholes shall be placed at the B.C. and E.C. and at 400 foot maximum intervals along the curve for pipes 24 inches and less in diameter; and 500 foot maximum intervals along the curve for pipes greater than 24 inches in diameter.

4.16 MINIMUM SIZE OF STORM DRAINS

Storm drain mains and laterals connecting inlets to mains shall not be less than eighteen inches (18") in diameter. Exceptions are subject to approval by the City Engineer.

4.17 VELOCITY

All storm drain lines shall be designed to flow with a minimum velocity of two feet (2') per second.

4.18 EASEMENTS

General: Drainage facilities that are constructed to serve predominantly public property or public right-of-way shall be publicly owned and shall be dedicated to the City.

Whenever possible, public conveyance systems shall be constructed within the public right-of-way. When site conditions make this infeasible, public utility easements or dedicated tracts shall be provided. Private drainage facilities shall be constructed outside of the public right-of-way, on private property.

Easement Documentation Requirements: All easements shall be shown on the project plans and shall be designated with either "private" or "public". All property documentation shall be properly executed. Easement/tract documents shall include a map, the Yolo County Assessor number of affected properties and owners' names.

Easements shall be dedicated to and approved by the City prior to acceptance of a public drainage system. Grantee shall be the "City of Woodland, a municipal corporation, its heirs, successors, or assignees." Indemnification and hold-harmless agreements to hold the

City harmless shall be included in recorded documents where maintenance access across private property and/or pumping of storm drainage is deemed necessary by the City.

Bills of sale for all drainage facilities appurtenant to public easements or tracts shall be given to the City with the executed real property documents that transfer property rights to the City. Grantor shall pay all title policy and recording fees necessary to transfer rights to the City.

A. Drainage Facilities: All drainage facilities other than on-site systems shall be located in one of the following:

1. Public street or alley.
2. Public utility easement, specifically dedicated to include drainage facilities.
3. Dedicated drainage easement.

B. Closed Conduits: closed conduit Easements shall meet the following requirements:

1. For pipes under 24 inches in diameter, minimum width of ten feet with the centerline of the pipe at quarter point; pipe may reverse sides at angle points.

2. For pipes exceeding 24 inches in diameter or trenches exceeding five feet in depth, the easement width shall be based upon the following formula:

WIDTH = Trench Depth + Pipe Diameter + Two Feet

3. Minimum width of fifteen feet for side and backlot drains in a subdivision.

C. Open Channels: Easements for open channels shall have sufficient width to contain the channel, fencing where required, and a fifteen-foot service road.

4.19 TRENCH DRAINS

Trench drains shall not be utilized for public or private drainage systems. Private developments shall be connected directly to the City underground storm drain system or graded to drain into street side surface drainage system.

4.20 STUB END PIPES

All stub end pipes shall be plugged with a pre-fabricated water tight plug.

4.21 OPEN CHANNELS

Requirements for open channels are as follows:

A. Drainage: Drainage may be conveyed through an open channel with prior written approval of the City Engineer.

B. Construction: Channels shall be constructed to a typical cross section. Fully lined channels shall be designed with maximum side slopes of 1:1; channels with unlined sides shall be designed with maximum side slopes of 3:1. Lined channels shall have a minimum bottom width of six feet (6') and shall have adequate access ramps for maintenance equipment.

C. Design: Channels shall be designed to convey the design flow with a minimum velocity of two feet per second (2 fps). The maximum velocities shall be as follows:

1. Earth channels, six (6) fps.

2. Fully lined channels, ten (10) fps.

3. Bottom only lined channels, eight (8) fps.

D. Curve Radius: The centerline curve radius of an open channel shall be equal to or greater than twice the bottom width (35-foot minimum).

4.22 RETENTION PONDS AND PERVIOUS PAVEMENT

A. Retention ponds are generally prohibited due to limited availability of pond capacity for multi-sequential rain events. The City Engineer may consider retention pond**(s) on a** case-by-case.

B. Pervious Pavement may be allowed on site to meet Storm Water Quality Requirements only; not as a method of reducing public infrastructure requirements. As a minimum porous pavement designs shall:

i. Be constructed of porous portland cement concrete only in trafficked areas; with approval of the City Engineer other materials may be used in non trafficked areas.

ii. Design shall be in accordance with the principals of the May 2007 Storm water Quality Design Manual for the Sacramento and South Placer Regions, or updated document as approved by the City Engineer.

iii. Soil shall be tested to determine permeability. If permeability is inadequate to absorb the 2 year-24 hour storm; porous pavement design shall include the installation of under drains.

iv. Pervious Pavement design, inspection and maintenance reference: http://www.pervious pavement.org by the National Ready Mixed Concrete Association.

4.23 LEVEES

Where new levees are constructed, the land side levee slope will be 2:1. The water side slope of the new levee embankment will be constructed at 3:1. The top width of the levee berm will be fifteen feet and will also function as a patrol road. The limits of the right-of-way will extend ten feet beyond the toe of the land side slope of the new levee embankment to provide access for levee maintenance.

4.24 SLOPE PROTECTION

Where channel slope protection is required, stone riprap protection shall be designed in accordance with EM 1110-02-1601, "Hydraulic Design of Flood Control Channels".

4.25 STRUCTURE OPERATION CRITERIA

All structures such as ponds, control gates, weirs, flap gates, temporary facilities, etc., shall be shown in detail on design and construction drawings. Their purpose, functional operation parameters and settings shall be described on the drawings. Pond ownership and maintenance responsibilities shall also be included.

4.26 DRAIN INLETS

Storm drain inlets located in non-paved areas shall utilize 24" x 24" minimum galvanized steel grate set horizontally and be surrounded by six inch (6") cobble one-foot (1') in depth and six feet (6') in radius. Cobble may be sloped no steeper than 3:1.

4.27 FIGURE 4A – METHODS FOR ESTIMATING DESIGN FLOW

APPLICATION	METHOD	MAXIMUM BASIN SIZE	DESIGN PARAMETER	REFERENCE
Design of: ▪ Street Drainage ▪ Storm Drains ▪ Culverts not Associated With Channels	Rational	640 ac	Flow	Hydrology Standards, Section 5, City of Woodland Phase A Storm Drainage Facilities Master Plan – Technical Memo No. 1
Master Plans or Designs of: ▪ Storm Drains ▪ Open Channels ▪ Bridges and Culverts ▪ Detention Basins	HEC-1, Runoff Block of SWMM	No Limit	Flow and Volume	Hydrology Standards, Section 6 and Section 7, City of Woodland Phase A Storm Drainage Facilities Master Plan – Technical Memo No. 1
Water Quality Detention Basins	HEC-1, Runoff Block of SWMM	No Limit	Volume	City of Woodland Phase A Storm Drainage Facilities Master Plan, Storm Water Quality Regulations, and Control Measures, prepared by Larry Walker Associates

4.28 FIGURE 4B – MANNING'S 'N' FOR CHANNEL FLOW

LAND USE DESCRIPTION	MANNING'S "n"
Concrete Pipe	0.015
Corrugated Metal Pipe	0.024
Concrete-Lined Channels	0.015
Earth Channel – Straight/Smooth	0.022
Earth Channel – Dredged	0.028
Mowed Grass Lined Channel	0.035
Natural Channel – Clean/Some Pools	0.040
Natural Channel – Winding/Some Vegetation	0.048
Natural Channel – Winding/Stony/Partial Vegetation	0.048
Natural Channel – Debris/Pools/Rocks/Full Vegetation	0.070
Floodplain – Isolated Trees/Mowed Grass	0.040
Floodplain – Isolated Trees/High Grass	0.050
Floodplain – Few Trees/Shrubs/Weeds	0.080
Floodplain – Scattered Trees/Shrubs	0.120
Floodplain – Numerous Trees/Dense Vines	0.200

Source: Draft "Sacramento City/County Drainage Manual, Hydrology Standards Volume II," December 1996.

4.29 FIGURE 4C – LAND USE DESIGNATION AND EFFECTIVE PERCENT IMPERVIOUS

Land Use from Aerial Photography[3]	Summary of Density/Intensity Assumptions by General Plan Land Use Designation[2]				Eff% Imper-vious[2]
	General Plan Land Use Designation	Maximum Allowable Density/ Intensity	Assumed Average Density/ Intensity	Land Use Category (units or employees)	
		DUs Per Gross Acre	DUs per Gross Acre	Type of Units	
Highways, Parking	Central Commercial (CC)	4.00	1.00	Retail, office, government	95
Commercial, Office	General Commercial (GC) Neighborhood Commercial (NC) Service Commercial (SC) Highway Commercial (HC) Business Park (BP)	0.40 0.50 0.50 0.50	0.25 0.25 0.25 0.35	Retail, office, medical office Retail, service Retail Office	90
Industrial	Industrial (I)	0.60	0.40	Industrial	85
Apartments	N/A	N/A	N/A	N/A	80
Mobile Home Park	N/A	N/A	N/A	N/A	75
Condominiums	Medium Density Residential (MDR)	8.0 to 25.0	20.0	Multi-family DUs	70
Residential: 8-10 du/acre (20-25du/ha)	Medium/Low Density Residential (MLDR)	5.0 to 12.0	8.0	Single Family DUs	60
Residential: 6-8 du/acre (15-20 du/ha)	Neighborhood Preservation (NP) Planned Neighborhood (PN) Public Service (PS)	3.0 to 8.0 1.0 to 25.0	7.0 6.5	Single Family DUs Single Family DU, Multi-Family DUs, Retail, Schools	50
Residential: 4-6 du/acre (10-15du/ha)	Low Density Residential (LDR)	3.0 to 8.0	5.0	Single Family DUs	40
Residential: 3-4 du/acre (7.5-10 du/ha)	N/A	N/A	N/A	N/A	30
Residential: 2-3 du/acre (5-7.5 du/ha)	Very-Low Density Residential (VLDR)	1.0 to 4.0	3.0	Single Family DUs	25
Residential: 2-3 du/acre (5-7.5 du/ha)	Very-Low Density Residential (VLDR)	1.0 to 4.0	3.0	Single Family DUs	25

[2] J. Laurence Mintier & Associates, 1995.
[3] Draft "Sacramento City/County Drainage Manual, Hydrology Standards Volume II," December 1996

4.29 FIGURE 4C – LAND USE DESIGNATION AND EFFECTIVE PERCENT IMPERVIOUS

Land Use from Aerial Photography[3]	Summary of Density/Intensity Assumptions by General Plan Land Use Designation[2]				Eff% Imper-vious[2]
		Maximum Allowable Density/ Intensity	Assumed Average Density/ Intensity	Land Use Category (units or employees)	
	General Plan Land Use Designation	**DUs Per Gross Acre**	**DUs per Gross Acre**	**Type of Units**	
Residential: 1-2 du/acre (2.5-5 du/ha)	**N/A**	**N/A**	**N/A**	**N/A**	**20**
Residential: 0.5-1 du/acre (1-2.5 du/ha)	Rural Residential (RR)	0.0 to 2.0	1.0	Single Family DUs	15
Residential: 0.2-.5 du/acre (0.5-1 du/ha)	N/A	N/A	N/A	N/A	10
Residential: <.2 du/acre (.05 du/ha)	N/A	N/A	N/A	N/A	5
Open Space, Grassland	Open Space (OS)	N/A	N/A	N/A	2
Agriculture	Agriculture (A) Urban Reserve (UR)	N/A	N/A	N/A	2

4.30 FIGURE 4D - MEAN ANNUAL PRECIPITATION VS. RAINFALL DEPTH-DURATION-FREQUENCY (INCHES)

Dur	Recurrence Interval																	
	2-Year Storm			5-Year Storm			10-Year Storm			25-Year Storm			50-Year Storm			100-Year Storm		
	17	18	19	17	18	19	17	18	19	17	18	19	17	18	19	17	18	19
5M	0.17	0.18	0.19	0.21	0.23	0.24	0.25	0.26	0.28	0.29	0.31	0.33	0.32	0.34	0.36	0.35	0.37	0.40
10M	0.23	0.24	0.26	0.29	0.31	0.32	0.33	0.36	0.38	0.39	0.42	0.44	0.43	0.46	0.49	0.47	0.51	0.54
15M	0.27	0.29	0.30	0.34	0.36	0.39	0.40	0.43	0.45	0.47	0.50	0.53	0.52	0.55	0.59	0.57	0.60	0.64
30M	0.37	0.39	0.41	0.46	0.49	0.52	0.54	0.58	0.61	0.63	0.68	0.72	0.70	0.75	0.79	0.77	0.82	0.87
1H	0.49	0.53	0.56	0.63	0.67	0.71	0.73	0.78	0.83	0.86	0.92	0.97	0.95	1.01	1.07	1.04	1.11	1.17
2H	0.67	0.71	0.76	0.85	0.91	0.96	0.99	1.06	1.12	1.16	1.24	1.32	1.29	1.37	1.46	1.41	1.50	1.59
3H	0.80	0.85	0.90	1.02	1.08	1.15	1.18	1.26	1.34	1.39	1.48	1.57	1.54	1.64	1.74	1.68	1.79	1.90
6H	0.99	1.05	1.12	1.38	1.47	1.56	1.47	1.56	1.66	1.72	1.83	1.94	1.90	2.03	2.15	2.08	2.21	2.35
12H	1.33	1.42	1.51	1.86	1.98	2.11	1.97	2.10	2.23	2.32	2.47	2.62	2.56	2.73	2.89	2.80	2.98	3.16
24H	1.99	2.12	2.24	2.52	2.69	2.85	2.94	3.13	3.33	3.45	3.68	3.90	3.82	4.07	4.32	4.17	4.44	4.71
2D	2.51	2.67	2.83	3.16	3.37	3.58	3.69	3.93	4.17	4.33	4.61	4.90	4.79	5.10	5.41	5.23	5.57	5.91
3D	2.94	3.14	3.33	3.72	3.96	4.20	4.33	4.62	4.90	5.08	5.42	5.75	5.62	5.99	6.36	6.14	6.54	6.94
4D	3.26	3.48	3.69	4.12	4.39	4.66	4.80	5.12	5.43	5.63	6.00	6.37	6.23	6.64	7.04	6.81	7.25	7.70
5D	3.57	3.80	4.03	4.50	4.80	5.09	5.25	5.60	5.94	6.16	6.57	6.97	6.82	7.26	7.71	7.45	7.93	8.42
6D	3.82	4.07	4.32	4.82	5.13	5.45	5.62	5.99	6.35	6.59	7.03	7.46	7.29	7.77	8.24	7.97	8.49	9.01
8D	4.30	4.58	4.86	5.43	5.78	6.14	6.33	6.74	7.16	7.43	7.91	8.40	8.21	8.75	9.28	8.97	9.56	10.14
10D	4.62	4.92	5.23	5.83	6.21	6.60	6.80	7.25	7.69	7.98	8.50	9.03	8.83	9.40	9.98	9.64	10.27	10.90
15D	5.29	5.64	5.98	6.68	7.12	7.55	7.79	8.30	8.81	9.14	9.74	10.34	10.11	10.77	11.43	11.04	11.76	12.49
20D	5.92	6.30	6.69	7.47	7.96	8.44	8.71	9.28	9.85	10.22	10.89	11.56	11.30	12.04	12.78	12.35	13.15	13.96
30D	6.97	7.43	7.88	8.80	9.37	9.95	10.26	10.93	11.60	12.04	12.83	13.61	13.32	14.19	45.06	14.55	15.50	16.45
60D	10.27	10.94	11.61	12.96	13.81	14.65	15.12	16.10	17.09	17.74	18.89	20.05	19.61	20.89	22.17	21.43	22.83	24.22
Year	17.24	18.37	19.49	21.76	23.18	24.60	25.38	27.04	28.69	29.78	31.72	33.67	32.93	35.08	37.23	35.98	38.33	40.67

Source: "Solano and Yolo County Design Rainfall," prepared by James D. Goodridge, Consulting Engineer, Revised

4.31 FIGURE 4E – MEAN ANNUAL PRECIPITATION VS. RAINFALL DEPTH-DURATION-FREQUENCY (INCHES/HOUR)

Dur	Recurrence Interval																	
	2-Year Storm			5-Year Storm			10-Year Storm			25-Year Storm			50-Year Storm			100-Year Storm		
	17	18	19	17	18	19	17	18	19	17	18	19	17	18	19	17	18	19
5M	2.04	2.16	2.28	2.52	2.76	2.28	3.00	3.12	3.36	3.48	3.72	3.96	3.84	4.08	4.32	4.20	4.44	4.80
10M	1.38	1.44	1.56	1.74	1.86	1.92	1.98	2.16	2.28	2.34	2.52	2.64	2.58	2.76	2.94	2.82	3.06	3.24
15M	1.08	1.16	1.20	1.36	1.44	1.56	1.60	1.72	1.80	1.88	2.00	2.12	2.08	2.20	2.36	2.28	2.40	2.56
30M	0.74	0.78	0.82	0.92	0.98	1.04	1.08	1.16	1.22	1.26	1.36	1.44	1.40	1.50	1.58	1.54	1.64	1.74
1H	0.49	0.53	0.56	0.63	0.67	0.1	0.73	0.78	0.83	0.86	0.92	0.97	0.95	1.01	1.07	1.04	1.11	1.17
2H	0.34	0.36	0.38	0.43	0.46	0.48	0.50	0.53	0.56	0.58	0.62	0.66	0.65	0.69	0.73	0.71	0.75	0.80
3H	0.27	0.28	0.30	0.34	0.36	0.38	0.39	0.42	0.45	0.46	0.49	0.52	0.51	0.55	0.58	0.56	0.60	0.63
6H	0.17	0.18	0.19	0.23	0.25	0.26	0.25	0.26	0.28	0.29	0.31	0.32	0.32	0.34	0.36	0.35	0.37	0.39
12H	0.11	0.12	0.13	0.02	0.17	0.18	0.16	0.18	0.19	0.19	0.21	0.22	0.21	0.23	0.24	0.23	0.25	0.26
24H	0.08	0.09	0.09	0.16	0.11	0.12	0.12	0.13	0.14	0.14	0.15	0.16	0.16	0.17	0.18	0.17	0.19	0.20
2D	0.05	0.06	0.06	0.07	0.07	0.07	0.08	0.08	0.09	0.09	0.10	0.10	0.10	0.11	0.11	0.11	0.12	0.12
3D	0.04	0.04	0.05	0.05	0.06	0.06	0.06	0.06	0.07	0.07	0.08	0.08	0.08	0.08	0.09	0.09	0.09	0.10
4D	0.03	0.04	0.04	0.04	0.05	0.05	0.05	0.05	0.06	0.06	0.06	0.07	0.06	0.07	0.07	0.07	0.08	0.08
5D	0.03	0.03	0.03	0.04	0.04	0.04	0.04	0.05	0.05	0.05	0.05	0.06	0.06	0.06	0.06	0.06	0.07	0.07
6D	0.03	0.03	0.03	0.03	0.04	0.04	0.04	0.04	0.04	0.05	0.05	0.05	0.05	0.05	0.06	0.06	0.06	0.06
8D	0.02	0.02	0.03	0.03	0.03	0.03	0.03	0.04	0.04	0.04	0.04	0.04	0.04	0.05	0.05	0.05	0.05	0.05
10D	0.02	0.02	0.02	0.02	0.03	0.03	0.03	0.03	0.03	0.03	0.04	0.04	0.04	0.04	0.04	0.04	0.04	0.05
15D	0.01	0.02	0.02	0.02	0.02	0.02	0.02	0.02	0.02	0.03	0.03	0.03	0.03	0.03	0.03	0.03	0.03	0.03
20D	0.01	0.01	0.01	0.02	0.02	0.02	0.02	0.02	0.02	0.02	0.02	0.02	0.02	0.03	0.03	0.03	0.03	0.03
30D	0.01	0.01	0.01	0.01	0.01	0.01	0.01	0.02	0.02	0.02	0.02	0.02	0.02	0.02	0.02	0.02	0.02	0.02
60D	0.01	0.01	0.01	0.01	0.01	0.01	0.01	0.01	0.01	0.01	0.01	0.01	0.01	0.01	0.02	0.01	0.02	0.02
Year	0.00	0.00	0.00	0.00	0.00	0.00	0.00	0.00	0.00	0.00	0.00	0.00	0.00	0.00	0.00	0.00	0.00	0.00

Source: "Solano and Yolo County Design Rainfall," prepared by James D. Goodridge, Consulting Engineer, Revised June 26, 1992.

4.32 FIGURE 4F – SAMPLE RATIONAL METHOD CALCULATION SHEET

RATIONAL METHOD CALCULATION SHEET

Inlet		Area A	C	CA	Sum CA	Time of Concentration																		Total T_c	i	CiA	Q_{DESIGN}	Pipe	Remarks
						Overland Flow				Gutter Flow			Pipe Flow					Channel Flow											
From	To	(Acres)		(Acres)	(Acres)	L_O (ft)	S_O	Overland "n"	T_O (min)	L_g (ft)	S_g	T_g (min)	S_p	D (in)	V (fps)	L (ft)	T_p (min)	S_{ch}	Bottom Width	Manning's "n"	Velocity (fps)	L_{ch} (ft)	T_{ch} (min)	(min)	(in/hr)		(cfs)	Capacity (cfs)	

Note: This spreadsheet is electronically available for conducting storm drainage calculations from the City of Woodland Public Works Department Engineering Division upon request. Please include your e-mail address with your request.

4.33 FIGURE 4G – LAND USE VS. EFFECTIVE PERCENT IMPERVIOUS AND 10-YEAR RUNOFF COEFFICIENTS FOR THE RATIONAL METHOD

Land Use from Aerial Photography	General Plan Land Use Designation	Effective % Impervious	10-Year Runoff Coefficient by Hydrologic Soil Group		
			B	C	D
Highways, Parking	Central Commercial (CC)	95	0.86	0.87	0.87
Commercial, Office	General Commercial (GC); Service Commercial (SC); Highway Commercial (HC); Business Park (BP)	90	0.82	0.84	0.85
Industrial	Industrial (I)	85	0.78	0.80	0.82
Apartments	N/A	80	0.74	0.77	0.79
Mobile Home Park	N/A	75	0.70	0.74	0.76
Condominiums	Med. Density Residential (MDR)	70	0.66	0.71	0.74
Residential: 8-10 du/acre (20-25 du/ha)	Medium/Low Density Residential (MLDR)	60	0.58	0.64	0.68
Residential: 6-8 du/acre (15-20 du/ha)	Neighborhood Preservation (NP); Planned Neighborhood (PN)	50	0.50	0.58	0.63
Residential: 3-4 du/acre (7.5-10 du/ha)	N/A	30	0.34	0.45	0.52
Residential: 2-3 du/acre (5-7.5 du/ha)	Very-Low Density Residential (VLDR)	25	0.30	0.41	0.49
Residential: 1-2 du/acre (2.5-5 du/ha)	N/A	20	0.26	0.38	0.46
Residential: .5-1 du/acre (1-2.5 du/ha)	Rural Residential (RR)	15	0.22	0.35	0.43
Residential: .2-.5 du/acre (0.5-1 du/ha)	N/A	10	0.18	0.32	0.41
Residential: <.2 du/acre (.05 du/ha)	Agricultural Residential (AR)	5	0.14	0.28	0.38
Open Space, Grassland	N/A	2	0.12	0.26	0.36
Agriculture	N/A	2	0.26	0.41	0.51

4.34 FIGURE 4H – RATIONAL METHOD RUNOFF COEFFICIENT FREQ FACTORS

RETURN PERIOD, YEARS	FREQUENCY FACTOR "F"
2	0.83
5	0.90
10	1.00
25	1.08
50	1.15
100	1.24

4.35 FIGURE 4I – RATIONAL METHOD SUBBASIN RUNOFF COEFFICIENT CALC SHEET

Land Use	Effective Percent Impervious	Hydrologic Soil Group B			Hydrologic Soil Group C			Hydrologic Soil Group D		
		Runoff Coeff (C)	Area (acres)	F X C X Area[1]	Runoff Coeff (C)	Area (acres)	F X C X Area[1]	Runoff Coeff (C)	Area (acres)	F X C X Area[1]
Central Commercial (CC)	95	0.86			0.87			0.87		
General Commercial (GC)	90	0.82			0.84			0.85		
Service Commercial (SC)	90	0.82			0.84			0.85		
Highway Commercial (HC)	90	0.82			0.84			0.85		
Business Park (BP)	90	0.82			0.84			0.85		
Industrial (I)	85	0.78			0.80			0.82		
Apartments	80	0.74			0.77			0.79		
Mobile Home Park	75	0.70			0.74			0.76		
Medium Density Residential	70	0.66			0.71			0.74		
Medium/Low Density Residential (MLDR)	60	0.58			0.64			0.68		
Neighborhood Preservation	50	0.50			0.58			0.63		
Planned Neighborhood (PN)	50	0.50			0.58			0.63		
Low Density Residential	40	0.42			0.51			0.57		
Residential, 3-4 du/acre	30	0.34			0.45			0.52		
Very Low Density Resident	25	0.30			0.41			0.49		
Residential, 1-2 du/acre	20	0.26			0.38			0.46		
Rural Residential (RR)	15	0.22			0.35			0.43		
Residential, 0.2-.5 du/acre	10	0.18			0.32			0.41		
Agricultural Residential (AR)	5	0.14			0.28			0.38		
Open Space, Grassland	2	0.12			0.26			0.36		
Agriculture	2	0.26			0.41			0.51		
Totals			0.00	0.00		0.00	0.00		0.00	0.00

[1]Apply Runoff Coefficient Frequency F Factor of 0.83, 0.90, 1.00, 1.08, 1.15, and 1.24 to 10-Year Runoff Coefficient for design storm return periods of 2, 5, 10, 25, 50, and 100 years, respectively.

4.36 FIGURE 4J – PARAMETERS FOR OVERLAND FLOW WITH FLOW DEPTHS LESS THAN TWO INCHES (50MM)

Surface	Overland "n"	Distance, ft. (m)
Pavement – Smooth	0.02	50 (15)
Pavement – Rough/Cracked	0.05	50 (15)
Bare Soil – Newly Graded Areas	0.10	100 (30)
Range – Heavily Grazed	0.15	100 (30)
Turf – 1" to 2"/Lawns/Golf Course	0.20	100 (30)
Turf – 2" to 4"/Parks/Medians/Pasture	0.30	200 (60)
Turf – 4" to 6"/Natural Grassland	0.40	200 (60)
Few Trees – Grass Undergrowth	0.50	300 (90)
Scattered Trees – Weed/Shrub Undergrowth	0.60	300 (90)
Numerous Trees – Dense Undergrowth	0.80	300 (90)

Source: Draft "Sacramento City/County Drainage Manual, Hydrology Standards Volume II," December 1996

4.37 FIGURE 4K – OVERLAND FLOW PRECIPITATION INTENSITY

Design Frequency (yr)	Precipitation Intensity in/hr (mm/hr)	C	Initial Estimates	
			T_o = 5 min in/hr (mm/hr)	T_o = 10 min in/hr (mm/hr)
2	$i=CT_o^{-0.519}$	3.8 (96.5)	1.65 (41.9)	1.15 (29.2)
5	$i=CT_o^{-0.558}$	6.3 (160.0)	2.57 (65.3)	1.74 (44.5)
10	$i=CT_o^{-0.576}$	8.13 (206.5)	3.22 (81.8)	2.16 (54.9)
25	$i=CT_o^{-0.601}$	16 (279.4)	4.18 (106.2)	2.76 (70.1)
50	$i=CT_o^{-0.620}$	13.6 (345.0)	4.84 (122.9)	3.12 (79.2)
100	$i=CT_o^{-0.627}$	15.8 (401.0)	5.76 (146.3)	3.73 (94.7)
200	$i=CT_o^{-0.642}$	18.4 (467.0)	6.55 (166.4)	4.20 (106.7)
500	$i=CT_o^{-0.652}$	22.1 (561.0)	7.74 (196.5)	4.92 (125.0)

Source: Draft "Sacramento City/County Drainage Manual, Hydrology Standards Volume II," December 1996

4.38 FIGURE 4L – STANDARD OVERLAND FLOW PARAMETERS

Land Use	Overland Flow Time (min)	Slope ft/ft (m/m)	Overland "n"	Distance ft (m)
Commercial	3	~	~	~
Residential	9	~	~	~
Open Space	17-44[1]	.001-.01	0.30	200 (61)

[1]*Computed using overland flow equation depending on slope.*
Source: Draft "Sacramento City/County Drainage Manual, Hydrology Standards Volume II," December 1996

4.39 FIGURE 4M – STORM DRAINAGE POND STANDARDS FOR NON-REGIONAL DETENTION PONDS

DESCRIPTION OF DESIGN STANDARDS	PERMANENT DETENTION POND WITH PARK	PERMANENT DETENTION POND	TEMPORARY DETENTION POND
A. DESIGN CRITERIA			
1. Storage Capacity a. Residential Areas b. Commercial/Industrial Areas	Refer to Section 4.04	Refer to Section 4.04	Refer to Section 4.04
2. Depth			
a. Water (max.)	4 ft.	Variable	Variable
b. Freeboard (min.)	1 ft.	1 ft.	1 ft.
c. High Water Elevation	1' below low D.I.	1' below low D.I.	1' below low D.I.
3. Service Area Size – max/min	None	None	None
4. Pond Construction			
a. Inside Slope	6:1	6:1	6:1
b. Access Road with Slope	12' wide/12:1 max.	12' wide/12:1 max.	12' wide/12:1 max.
c. Perimeter Road/Maint. Access	6' wide	12' wide	12' wide
d. Inlet Pipe	18" min. w/grate	18" min. w/grate	18" min. w/grate
e. Outlet Pipe	18" min. w/grate	18" min. w/grate	18" min. w/grate
5. Perimeter Fencing	As required	Yes	Yes
a. Type	Chain link min.	Chain link min.	Chain link min.
b. Height	6 ft. w/barb wire	6 ft. w/barb wire	6 ft. w/barb wire
c. Red wood Slats	As required	As required	As required
d. Gate for Maintenance Access	Yes	Yes	Yes
e. Location	On property line	On property line	On property line
f. Gate Access to Private Property	No	No	No
B. DESIGN AMENITIES	Variable	Variable	Variable
1. Slope Protection	Grass	Variable	Variable
2. Automatic Irrigation System	As required	As required	As required
3. Dual Use/Recreational	Yes	Variable	Variable

4.39 FIGURE 4M – STORM DRAINAGE POND STANDARDS FOR NON-REGIONAL DETENTION PONDS

DESCRIPTION OF DESIGN STANDARDS	PERMANENT DETENTION POND WITH PARK	PERMANENT DETENTION POND	TEMPORARY DETENTION POND
C. OTHER ISSUES			
1. Maintenance By: *	As required	City, Private, Dist	Private or District
2. Pumping Required to Empty Pond	N/A	As required	As required
3. Excess Dirt Stored on site	N/A	N/A	Optional
a. Height of mound	N/A	N/A	8' max
b. Slope of mound		N/A	3:1
4. Signage (name, address, owner)	Yes	Yes	Yes
5. O & M Manual	As required	As required	As required
6. Owned by:	City or District	City, Private, Dist	Private

*Pond may be maintained by entity other than the owner.

4.40 FIGURE 4N – RAINFALL INTENSITY DURATION FREQUENCY

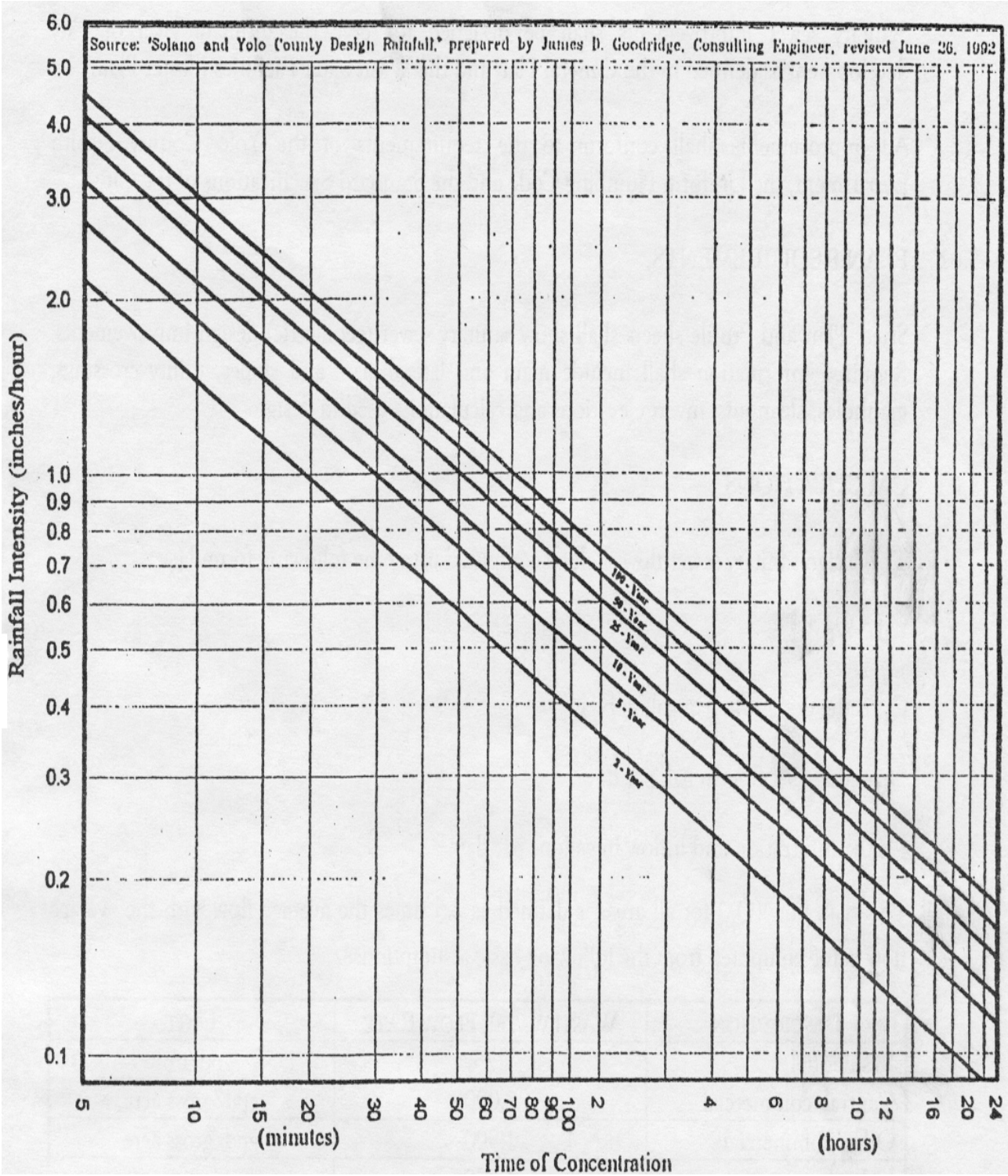

SECTION 5: SANITARY SEWER SYSTEM DESIGN

5.01 GENERAL

Sanitary sewer improvements shall be designed to serve the ultimate level of City development as defined in the General Plan and the Wastewater Facilities Master Plan.

All improvements shall conform to the requirements of the Yolo County Health Department, the California Plumbing Code and the Standard Specifications of the City.

5.02 PLAN REQUIREMENTS

Street Plan and Profile sheets shall show sanitary sewer (geometric) design improvements. Required information shall include main and lateral sizes and slopes, SDR or wall thickness value, utility crossings, manholes, cleanouts, invert elevations and calculations used in design.

5.03 DESIGN FLOW

The design sanitary sewer flow shall be computed using the following formula:

$Q_d = Q_p + I$

Q_d is the design flow in gal. per day

Q_p is the peak flow in gal. per day

I is the infiltration and inflow in gallons per day

The peak flow (Q_p) in all areas for 12" diameter pipes or greater is defined as 2.5 times the average flow, for 10" diameter pipes it is 3 times the average flow and for 8" diameter pipes or smaller it is 3.5 times the average flow, with the average flow being computed from the following basic assumptions:

DESCRIPTION	WASTEWATER FLOW RATE	UNIT
Residential	225	gpd/unit
Central commercial	8,000	gpd/gross acre
Other commercial	1,500	gpd/gross acre
Industry	1,800	gpd/gross acre
Business park	1,000	gpd/gross acre
Public facilities	2,000	gpd/gross acre
School	25	gpd/student

The infiltration and inflow (I+I) shall be 600 gallons per acre per day for all areas.

5.04 PIPE DESIGN CAPACITY

Sewer mains shall be sized so that the design flow (Q_d) results in a depth of flow (d) that does not exceed the following ratios.

Pipe Diameter (D)	Maximum Allowed
Less than or equal to 12 inch	$d/D \leq 0.50$
Larger than 12 inch	$d/D \leq 0.70$

Manning's Formula: $Q = A(1.49/n)R^{2/3}S^{1/2}$

Where:

Q = flow rate, (ft^3/sec);

A = cross-sectional area of flow, (ft^2);

n = coefficient of roughness;

R = hydraulic radius, (ft); and

S = slope of pipe, (ft/ft).

Should be used to compute the required size of sewer pipe flowing full. The "n" value shall be 0.013 for vitrified clay pipe (VCP) and ductile iron pipe (DIP) and shall be .011 for polyvinyl chloride pipe (PVC) pipe or the pipe manufacturer's recommendation; whichever is greater. Minimum sewer velocity, at maximum allowed depth, shall be two feet (2') per second.

5.05 PIPE SIZES AND SLOPES

	PIPE DIAMETER	MINIMUM SLOPE
LATERALS	4"	.020
	6"	.010
MAINS	8"	.0035
	10"	.0025
	12"	.0020

5.06 TYPE OF PIPE

Pipe used for sanitary sewer improvements shall be extra strength VCP or PVC pipe. **VCP shall not be used below the seasonal groundwater level.** Special designs such as less than minimum cover requirements will require the use of special pipe materials in accordance with the Construction Specifications Section 10.12.

Improvements using PVC pipe shall require a statement by a Geotechnical Engineer stating that the native soil on the project site within the pipe zone area will have a minimum soils reaction modulus (E') of 150 psi. A Geotechnical Investigation Report that includes test results, evaluation of conditions and recommendations for groundwater handling shall be required for all plans installing public sewer facilities or private sewer systems constructed in high groundwater areas. Recommendations acceptable to the City will be incorporated into the proposed work. PVC pipe shall conform to the provisions of the Construction Specifications Section 10, Sanitary Sewers.

Ductile iron or other high-strength pipe, approved by the City Engineer, shall be used whenever cover is greater than 20 feet (20') or extra support strength is required (such as to resist traffic loading). Ductile iron pipe or other high strength pipe shall be used whenever cover is less than four feet (4'). If insufficient clearance exists between the sewer pipe and rigid or load transmitting structures, DI or Class 200 (SDR-14) PVC pipe conforming to the requirements of AWWA C900 may be used.

5.07 PIPE COVER AND CLEARANCE

Sewer mains shall have six feet (6') minimum cover from top of pipe to finished grade. Whenever deviation from this requirement is proposed, the pipes designed with less than minimum cover shall be clearly identified as such on the plans.

All sanitary sewers shall be placed within City right of way dedicated for public streets unless the use of easements is specifically approved by the City Engineer. In some streets, dual collectors may be required.

Permanent sewer easements shall be a minimum of 15 feet (15') wide for sewers pipe up to 18 inches (18") and 20 feet (20') minimum for pipe larger than 18 inches (18"). A trench wall slope of 1.5:1 (Hor:Vert) shall be the basis on which the easement width is determined. The slope may be adjusted as required be existing soil conditions for adequate stability. Temporary construction easements of adequate dimensions shall be provided to allow the construction within the permanent easement to be completed in a safe and reasonable manner. If it is necessary to install a sewer main within a private road, the sewer easement shall be the width of the paving plus one foot each side.

In areas of high groundwater, design techniques shall be incorporated to minimize the depth of laterals and mains.

Sewer laterals shall have five feet (5') minimum and six feet (6') maximum cover from top of pipe to finished grade at the property line.

Sewer mains shall be located at least ten feet (10') horizontally (outside clearance) from and one foot (1') minimum (outside clearance) below water mains.

Vertical clearance between sewer mains and all other (non-potable water) utilities shall be a minimum of one foot (1').

5.08 HORIZONTAL AND VERTICAL ALIGNMENT

Mains and trunk sewers shall be located parallel with and six feet (6') off the centerline of streets, and on the opposite side of the centerline as the water main.

Curved alignments shall be designed based upon ASTM C425 maximum allowable deflection and NCPI Engineering Manual radius of curvature for VCP and the latest version of the Handbook of PVC Pipe Design and Construction for PVC pipe.

Vertical alignment shall provide a constant slope between manholes. If a change in grade is necessary, construction of a manhole shall be required unless if otherwise approved by the City Engineer. In such case, elevations shall be shown at ten-foot intervals throughout the length of the vertical curve. Joint deflections in excess of 66% of the pipe manufacture's recommended maximum will not be allowed. Only factory joints will be allowed.

5.09 SERVICE LATERAL

A separate service lateral shall be provided for each individual lot or parcel. Service laterals shall be located six (6") inches below and eighteen (18") inches away from the water lateral for residential lots. A cleanout shall be provided for all service laterals. Residential service laterals shall be four (4") inches minimum. Commercial and industrial service laterals shall be six (6") inches minimum. Six-inch (6") laterals may be required to tie into a manhole, depending on the proposed commercial or industrial land use. See also Standard Details 0505, 510 and 512.

In areas where the service lateral conflicts with the storm drain, double long sweep 45 degree bends are allowed for use as approved by the City Engineer. See also Standard Detail 0501.

5.10 MANHOLES

The spacing of manholes shall be:

PIPE SIZE, INCHES	MAXIMUM MANHOLE SPACING, FEET
8-10	500
12 & Larger	Anything greater than 500 must be approved by the City Engineer.

Manholes shall be located at the beginning and end of curved sewers, the end of cul-de-sacs, at any change in pipe size or slope, at the connection point of any service lateral where adjacent manhole spacing is greater than 500 feet, and at points of angular change of more than 20 degrees. Manholes with different pipe sizes shall be connected so that the crown of the smaller main is no lower than the crown of the larger main and channeled to allow for a smooth transition of flow. Provide 0.1 foot drop through the manhole if main flow changes directions by more than 30 degrees or side sewer mains are connected to the manhole. Maximum drop shall be 2 feet (2') without drop structure construction. Drop manholes shall not be used unless approved by City Engineer.

5.11 ONSITE CONNECTIONS

There shall be no design connections that introduce storm runoff into the sanitary sewer.

5.12 SPECIAL DESIGN

Special designs of sanitary sewer facilities or other unusual structures (clean-outs or manholes upstream of sewer lines) shall require a study and approval of City Engineer.

5.13 PUMP STATIONS

To the extent practicable, regional wastewater pump stations shall be avoided. In unavoidable cases, a regional pump station may be considered for ownership by the City after submission of a detailed engineering report documenting reasons for proposing a pump station. This report shall establish that there is no reasonable alternative other than a pump station to serve the proposed tributary area. This report will be reviewed by the Public Works Department and a decision will be made by the Public Works Director or authorized representative to accept City ownership of such a pump station. All publicly owned wastewater pump stations shall comply with the City of Woodland Wastewater Pump Station Design Standards. Single parcel pump stations for required detention facilities shall be owned and maintained privately by the parcel owner.

5.14 TRENCH LOADING CONDITIONS

Flexible Conduit Loading: On flexible conduits, Marston's formula for flexible conduits as shown in the ASCE Manual and Report of Engineering Practice No. 60 and in other similar handbooks shall be used to determine the load placed on the pipe by the backfill. The maximum load allowable shall be determined by pipe deflections computed by the Iowa Deflection Formula (or Spangler's Formula). The soils reaction modulus (E') shall be estimated using a method acceptable to the City Engineer, and shall consider the modulus values of both the native and the bedding materials (ATV method). The bedding soils reaction modulus (E') used in the deflection calculation shall be 1,000 psi for bedding utilizing imported material to twelve inches above the top of the pipe. Deflection lag factor shall be 1.5. If specific soil data are unavailable as determined by a Soil Engineer, a soil weight of 120 p.c.f., a bedding constant (k) of 0.110 shall be used. Placement of flexible

conduit within soils equivalent to Class IV and Class V of table 1, ASTM D2321 material will not be permitted unless approved by the City Engineer.

Allowable Deflection: On flexible conduits, the maximum allowable deflection shall be 5% of the nominal inside diameter.

SECTION 6: WASTEWATER PUMP STATION

6.01 SCOPE OF WORK

The work performance under this section shall consist of furnishing all labor, materials, tools, equipment and incidentals in constructing a complete and operational sanitary sewer lift station as shown on the design plans, including but not limited to the following: wet well, pumps, piping, electrical wiring and control systems, dry pit, force main, force main discharge manhole, generator for back-up electrical power and station facilities.

6.02 PLANS OF WASTEWATER PUMP STATIONS

A. General Layout:

1. Plot plan showing layout of site and building(s), including driveway and number of parking stalls, exterior piping and appurtenances, fencing, and utilities. Property ties shall also be shown.

2. Plans and details of grading, drainage, erosion control, landscaping, and sprinkler system.

3. Show FEMA flood elevations if area is in a 100-year flood plain.

B. Detail Plans: Detail plans shall consist of the following:

1. Architectural plans, elevations, and details.

2. Structural plans, elevations, sections, and details.

3. Utility plans (electrical, mechanical, etc.) showing exact location and elevation to prevent damage from future excavations.

4. Mechanical plans including pump, isometrics, plumbing, ventilation, air condition and other equipment installations, piping layout, and details.

5. Electrical and telemetering plans and details including conduit schedule and lighting fixture layouts, control equipment arrangement, and wiring diagrams (one line and elementary control diagrams) for power distribution and controls.

6. Wastewater level control arrangement for operating pumps and alarms.

7. Other plans, sections, elevations, schematics, details and notes, as required, to adequately show the proposed construction.

6.03 SPECIFICATIONS

All work shall be in accordance with these Standard Specifications. Special provisions may supplement the Standard Specifications and may specify in detail the construction of sewer, wastewater pump station, and all appurtenances.

6.04 OTHER REQUIREMENTS

A. Design Calculations: Calculations pertinent to the design shall be submitted to the Community Development Department. Such calculations shall be used by the City for determining the adequacy and feasibility of the proposed facilities under review. Any failure on the part of the applicant or authorized representatives to submit such calculations may lead to delay in review and approval of the desired project.

B. Revisions to Approved Plans and Specifications: Any deviations from these specifications shall be approved in writing before such changes are made. Any deviations shall be submitted well in advance of any construction work which will be affected by such changes to permit sufficient time for review and approval.

C. Operation During Construction: Existing facilities and pump station units shall be kept in operation during construction.

D. Equipment Manuals: Equipment manuals shall be provided for each pump station. The manuals shall contain sufficient information on the installation, operation, maintenance, and repair of the pump station equipment. Manuals shall be bound in loose-leaf "D" binders. Folders shall contain only the information in relation to the equipment furnished. Each binder shall be labeled on its front cover and spine with the name of the facility and subject matter.

E. Facilities Operations and Maintenance Manual: A detailed operations and maintenance manual for the facilities to be constructed shall be required for all pump station projects. The manual shall give the operations and maintenance personnel the proper understanding, techniques, and any other information necessary to efficiently operate and maintain their facilities. Operations and maintenance manuals shall comply with all applicable State and Federal statutes, ordinances, and regulations.

F. Initial Start-Up Procedure Training: Services of field engineers or qualified personnel for all equipment provided shall be required to assist and instruct the City's operating and maintenance personnel. Such services shall commence before final acceptance testing. Two sets of manuals shall be provided to the City.

G. Spill Prevention Plan and Emergency Response Plan: The facilities O&M manual shall include sufficient operating instructions in the form of a spill prevention plan to prevent spills. The emergency response plan shall also provide instructions to the operator on how emergencies are to be handled. Two sets of manuals shall be provided to the City.

H. One Year Certification: A certification shall be prepared after one year of facility operation documenting the performance of the facility. This certification is intended to confirm that the facility is operating as planned and there are no problems with the equipment. The certification should be prepared by the facility designer, construction manager, or other person approved by the City.

6.05 DESIGN FACTORS TO BE CONSIDERED

A. Type of Station (Built-In-Place Wastewater Pump Station): All pump stations shall be built-in-place and may be either dry or wet well type. Pre-manufactured pump station systems may be considered upon review by the City Engineer.

B. Wastewater Flows and Design Capacity:

1. *Wastewater Flows*. Wastewater flows shall be determined in accordance with Section 5, Design Standards.

2. *Design Capacity*. Wastewater pump stations shall be designed to discharge design flows.

C. Location: Wastewater pump stations shall be located where tributary areas will be most effectively serviced and where development, construction, and operational costs would be at a minimum. Pump stations should not be subject to flooding and shall be readily accessible.

Wastewater pump station sites shall be adequate to allow on-site parking of service trucks and equipment and to buffer adjoining properties from noise. Future modification and expansion requirements shall be given consideration.

6.06 SITE IMPROVEMENTS

A. Grading: Wastewater pump stations shall be located two feet (2') above 100-Year Flood Level and provided with adequate drainage facilities to carry away storm waters. Adjacent properties shall not be jeopardized by such provisions.

B. Driveways and Parking Areas: Paved driveways and parking areas shall be provided for service trucks. Width of driveways shall be 12 feet minimum. Pavement shall be asphalt or Portland cement concrete. Concrete curbs shall be required for all pump stations. Entrance gates shall be set inward, toward the station, at least 18-feet to provide safety for trucks entering or leaving the station.

C. Fencing: Pump station sites shall be fenced in with a six foot (6') high fence or wall. Masonry walls or other approved types of enclosures are required if pump station is located adjacent to a residential project.

Where chain link fences are used, wire fabric shall be nine gauge minimum. In corrosive areas, corrosion protection or additional thickness shall be provided. In isolated areas, three strands of barbed wire should be installed along the top of the fence on an arm projecting outward at an angle of 45 degrees.

Gates shall be provided with heavy duty padlock hasp fixtures and shall be designed for safe opening and closing during strong winds. At facilities where PG&E transformers and/or meters are installed within the station's perimeter, hasps shall be designed to accommodate two padlocks. Design shall allow access with either padlock removed.

A one foot (1') wide gravel strip shall be provided under fencing. Gravel strip shall be contained with redwood or other approved durable material headers.

D. Landscaping: Sites shall be landscaped to blend with the surrounding environment to render a pleasing overall appearance. Consideration shall be made to minimize grounds keeping maintenance. Chain link fencing shall be screened with landscaping.

In lieu of grass for ground landscaping, crushed rock such as coral chips, red cinder stone or blue stone shall be considered.

E. Sprinkler System: Automatic sprinkler systems shall be installed for lawn/foliage irrigation.

6.07 STRUCTURE AND APPURTENANCES

A. Architectural Design: Wastewater pump stations shall be architecturally designed to be in harmony with surrounding development. Materials shall be selected to keep construction and maintenance cost at a practical level. As much as possible, non-corrosive materials shall be used. All architectural design shall be prepared by a Registered Architect.

B. Substructure: Built-in-place pump station substructures shall be reinforced concrete construction. All substructures shall be waterproof and watertight. Test borings shall be made to determine the soil characteristics and ground water conditions at all pump station sites and foundations shall be suitably designed. Consideration shall be given to flotation during construction and/or flooding condition. Ensure that NPSH requirements of pump are met.

Structural backfill for the lift station shall be placed as engineered fill, in lifts not exceeding 12 inches in compacted thickness. Each layer being of uniform moisture conditioned to at least the optimum moisture condition and compacted to at least 90% of the maximum dry density per ASTM D1557-91 specifications. Where backfill will support pavements the upper 12 inches of backfill shall be compacted to at least 95% relative compaction.

Backfill around the lift station well shall consist of clean crushed rock with 100% passing through a one inch (1") sieve and appreciable amount passing through a #4 sieve. A minimum of 12 inches (12") of crushed rock shall be placed at the base of the sewer lift station footing for stabilization and extending a minimum of 12 inches (12") outside the edge of cast-in-place or pre-cast base. In all areas the crushed rock shall be separated from the native material with an approved non-woven geotextile fabric.

With approval of the City Engineer, excavated soils may be used for backfill, after required drying has occurred to allow the specified degree of compaction to be achieved. Imported soils must be free of organic concentrations, rubble or debris and must have approval of the City Engineer.

The contractor may find it necessary to use deep wells to lower the water table in lieu of using sump construction and pumping. If sheet piling is used the contractor shall extend the tips to a sufficient depth to prevent "quick" conditions or sand "boils" from occurring. The excavation for the sewer lift station may require the contractor to use special construction techniques, which may include but not limited to, sloped excavation, shoring and/or sheet piling, or a combination of methods. The contractor shall submit to the City Engineer for review and approval all shop drawings and proposed methods of construction.

1. *Dry Wells*. Dry wells shall be sized to meet space requirements for equipment, piping and ease of maintenance. Adequate working space, at least two feet (2') clear, shall be provided between and around pumps and other equipment. Provide three feet (3') clearance for electrical equipment to comply with the California Electrical Code. Space and provisions for planned future pumps and equipment shall also be provided.

2. *Wet Wells*. Wet wells shall be designed on the basis of minimizing deposits of solids, preventing wastewater from becoming septic, and avoiding frequent starting of pumps. Minimum pump cycle (period from start to start) for any one pump shall be 5 minutes. Maximum retention time of wastewater in wet wells shall be 30 minutes at average flow (total wet well wastewater volume shall be used in computing retention time).

   Wet wells shall have a minimum inside width of five feet (5') and shall be sized to keep wastewater levels within the following limits:

   a. High water level. Desired: invert of incoming sewer. Maximum: crown of incoming sewer.

   b. Low water level. Not lower than top of pump casing.

   c. Vertical distance between pump start and stop levels. Six inches (6") minimum.

Floors shall have a slope of 1:1 minimum, sloping towards a hopper bottom. The hopper bottom shall be designed for proper installation and function of pump suction inlets.

Influent lines shall be designed without vertical drops into the wet well to minimize release of entrained air/gases.

The wet well shall be divided into two or more sections, properly interconnected, to facilitate repairs and cleaning.

Wet wells shall have a PVC lining to protect against hydrogen sulfide corrosion.

3. *Access*. Reinforced concrete or structural steel stairways shall be provided for access to dry wells. Stairways shall have a clear passage of at least 30 inches. Stairs shall be provided with permanent non-slip treading.

   Access shall be provided to all wet well compartments by means of manholes and 316 stainless steel or other approved ladder rungs. Access manholes shall be located to best facilitate maintenance operations.

4. *Ventilation*. Dry well shall be ventilated by a mechanical air exhaust system providing at least one air change every three (3) minutes. Outlets of exhaust system should not be located less than 12 feet from any opening except when exhausting through the roof. Ventilation exhaust shall be located downwind of any inlet openings. Velocity in air ducts shall not exceed 1500 fpm. When required fan capacity is large, the use of two fans shall be considered.

   Switches for the operation of the ventilation equipment shall be interlocked with the dry well light switch.

   Ventilation shafts shall be provided for wet well compartments with only one access opening.

5. *Drainage*. Dry well floors shall be constructed to drain by gravity into trench drains channeled to a sump. The sump pump shall be submersible.

   Minimum sump pump capacity shall be 25 gpm with exception of stations equipped with water seal systems, hydraulic operated cone-check valves, or similar type equipment. These stations shall be provided with duplex submersible pumps, each capable of pumping at least 50 gpm. A switch for lead/lag operations shall be provided at the MCC.

   Sump pump discharge shall enter the wet well adjacent to and as high as possible to the ground floor level.

Trench drains shall be covered with corrosion resistant gratings. Floor framing and anchoring devices for gratings shall be 316L stainless steel.

C. Superstructure: All pump stations shall have a superstructure.

1. *Floor Elevation and Area*. The latest flood zone map shall be consulted. Floor areas shall be adequate for mechanical equipment, electrical equipment and controls, sanitary facilities, storage, and future expansion. Adequate working space, at least two feet (2') clear, shall be provided between and around all equipment. Provide three feet (3') clearance for electrical equipment to comply with the California Electrical Code.

2. *Height*. Height of superstructure shall provide adequate working height. Whenever possible, height of superstructures shall be adequate to permit the removal of motor rotor from its stator or the removal of other equipment of larger size with the installed hoisting equipment.

3. *Materials of Construction*. The following materials are acceptable for construction of superstructures:

   a. Beams and Columns: reinforced concrete or structural steel.

   b. Roof: reinforced concrete.

   c. Wall: masonry or reinforced concrete.

4. *Insect Screens*. All structure openings for ventilation or light, except doorways, shall be equipped with removable stainless steel insect screens.

5. *Doors*. Doors shall be of adequate size to permit removal of pumps, motors, and other equipment.

   Locks shall be keyable to the Department of Public Works master key.

6. *Roofing*. Unless otherwise submitted and approved, roofing shall be pitched, standing seam metal.

7. *Railings and Stairways*. Railings and stairways shall conform to OSHA regulations and City Building Codes.

8. *Outdoor Enclosures*. Gages, meters, and control devices installed outdoors shall be mounted within weather protected enclosures. Gages integral of other devices such as bearing thermometer on motors are excepted. PG&E meter location shall permit easy PG&E viewing.

D. Provision for Equipment Removal: Provisions shall be made to facilitate removing pumps and other equipment for repair and maintenance.

1. *Openings.* Openings shall be provided in ground and intermediate level floors of pump stations. Ground level floor openings shall be covered with removable grates and have removable pipe posts and guard chains around its periphery. Stationary posts with removable pipe railing sections shall be provided around intermediate floor openings. All openings shall be provided with portable peripheral curbing and shall be large enough to provide ample room to install or remove pumps and other equipment.

2. *Hoists.* Built-in-place pump stations shall be equipped with trolley type hoists traveling on steel beams or traveling bridge cranes. Traveling bridge cranes shall be provided for installations equipped with 6 mgd pumps and larger. Bridge cranes shall be electrically controlled.

   Hoists for station with a vertical lift of 25 feet or more (pump room floor to top floor) shall be electrically powered. Plug-in type hoists operating on single phase 120 volts may be allowed for small stations.

3. *Eye Bolts.* Eye bolts for block and tackle type hoist shall be provided over pumps, valves, header piping, and other locations to facilitate maintenance operations and equipment removal. The load rating of each eyebolt shall be shown on the plans.

4. *Headroom.* Sufficient headroom, including room for lifting device, shall be provided to allow pump rotating element to be removed without disturbing the pump volute.

E. Station Facilities: Depending on proximity of station to other available facilities, and on a case-by-case basis, built-in-place pump stations may be required by the City Engineer to incorporate any or all of the following:

1. *Sanitary Fixtures and Accessories.*

   a. Sanitary fixtures and accessories:

      (i) Service sink shall be acid resistant, white enameled, cast iron body, stainless steel rim.

      (ii) Water closet shall be vitreous china, wall hung, close-coupled closet combination with open front, black closet seat without cover.

      (iii) Paper towel dispenser shall be chromium plated.

      (iv) Toilet paper holder shall be chromium plated.

(v) Paper toilet seat cover dispenser shall be chromium plated.

(vi) Soap dish shall be chromium plated.

(vii) Waste paper basket shall be plastic or non-corrosive material.

(viii) Wall mirror shall be a minimum 12 in. x 24 in.

(ix) Small storage cabinet for janitorial supplies shall be a minimum 12 in. wide, 18 in. high and 8 in. deep.

2. *Light Fixtures and Receptacles.*

a. Light Fixtures. Light fixtures shall be provided to supply adequate illumination within pump stations and shall be mounted where relamping can be accomplished with reasonable ease. Light fixtures shall also be installed next to exterior doors on the outside and around the perimeter of the building with at least one light over the wet well cover manholes. Wet wells shall not require light fixtures. Light fixtures below ground level shall be vapor-tight. Fluorescent fixtures using 48 inch T-8 type tubes are preferred. LED fixtures shall be used where appropriate.

b. Night Lights. Night lights shall be provided above all building entrances and equipped with lamp shades to prevent glare beyond the perimeter fence line. Consideration shall be made for a night light at the perimeter entrance gate. Night lights shall be automatically controlled by photocells.

c. Emergency Lights. Battery powered emergency lights shall be provided at all floor levels of the pump station and emergency generator location or building. Emergency lights shall be connected to the normal service via a receptacle, mounted adjacent to the emergency light.

d. Receptacles. Weather-proof receptacles shall be installed at all floor levels of pump station and outside the building, adjacent to the wetwell.

e. Electrical Code. Electrical system shall conform to the National Electric Code, and the Building Code of the City

3. *Telephone*. Terminal cabinet and touch tone instrument shall be provided.

4. *Miscellaneous Equipment.*

   a. Fire Extinguishers. Fifteen lbs. CO_2 for MCC room and generator area. Ten lbs. dry chemical for lower floors. All fire extinguishers shall be wall mounted.

   b. First aid kit.

   c. Eight inch electric clock.

   d. Plastic trash receptacle, thirty gallons capacity with cover.

   e. Desk and chair.

   f. Storage cabinet for flammable materials.

   g. Legal size drawer file cabinet with lock.

6.08 PUMPS, MOTORS, AND CONTROLS

A. Sewage Pumps and Motors:

1. *General.* Major pump stations shall be equipped with a minimum of three pumps. Smaller pump stations may be equipped with two pumps. Pumps shall be capable of operating over the range of flows without excessive cycling and without long retention time.

   Variable speed drives shall be utilized for wastewater pump stations and whenever conditions such as long retention periods or short pumping cycles cannot be avoided. Dual speed motors may be considered where appropriate.

   All pump stations shall be equipped with a standby pump equal in capacity to the largest of the main pumping units. The main pumping units shall be capable of handling the station's design flow without the use of the standby unit.

   Pumps shall be capable of passing spheres of at least two inches (2") and shall have a minimum discharge opening of four inches (4") in diameter. Speed of pumps shall not exceed 1200 rpm.

   Pumps shall be capable of safely rotating in reverse direction at full runaway speed without damage to appurtenances under the shutoff head of the units. The brake horsepower required at full motor speed at any head along the curve shall not exceed the rated horsepower of the motors.

2. *System Head-Capacity Curves.* Pumps shall be selected so that the head-capacity characteristics correspond as nearly as possible to the overall station requirements. This shall be accomplished by the preparation of the

system head-capacity curves showing all conditions of head and capacity under which the pumps will be required to operate. The system head-capacity curves shall be developed using standard hydraulic methods for determining friction losses to show the minimum and maximum head losses that can be expected. The equivalent length method using the Hazen-Williams formula is preferred.

Minimum and maximum head losses shall be determined using "C" values.

The system head-capacity curves shall consist of the following:

a. System Curves. Curves showing total dynamic losses in the force main at varying pumping rates for minimum and maximum static heads.

b. Individual Pump Characteristic Curves. Curves furnished by pump manufacturer showing pump's head-capacity characteristics. Curves at minimum and maximum anticipated speeds shall be furnished for variable speed pumps.

c. Modified Pump Curves. Curves showing pump's head-capacity characteristics at the station header, obtained by deducting friction losses in the suction and discharge piping of each individual pump from their characteristic curves at corresponding pumping rates.

d. Combined Modified Curves. Curves showing multiple pump operation, obtained by adding capacities at points of equal heads on the modified pump curves.

e. NPSH Curves. Curves showing the available system net positive suction head (NPSHA) and the pump's required net positive suction head (NPSHR) shall also be evaluated to minimize the occurrence of cavitation. The NPSHA and NPSHR curves shall include the operating conditions of minimum static suction head and maximum frictional loss (C=100) over the entire operating range of each pump. For variable speed pumps where operation of a single pump at the maximum speed will result in cavitation, NPSHA and NPSHR curves shall also be evaluated at the highest variable speed that the pump will experience when it is operated alone or when operated simultaneously with other pumps.

3. *Types of Pumps*. All pumps shall be vertical units. Motors for stations with pump capacities greater than 2 mgd shall be installed on the ground level floor and connected to pumps with removable driveshafts, intermediate driveshafts, and equipped with removable and adjustable flexible couplings. For pumps of less than 2 mgd capacity, submersible pumps may be used for wet pit installation. Consideration for pump on/off cycling shall be made

to avoid high motor temperature. Motors for stations with pump capacities less than 2 mgd may be pedestal mounted.

4. *Pump Construction.*

a. Dry Pit Pump.

(i) Handholes shall be provided on the periphery of pump casings and suction elbows for purposes of inspection and removal of obstructions. Handhole covers shall be flanged and secured to bossed sections and shall have interior surfaces formed to match interior surfaces of casting to which attached. Pump casing handhole shall be located so that visual inspection can be made of the discharge end as well as the volute. Handholes shall be a minimum of four inches (4") or about half of the pump size.

(ii) Pumps shall have flanged suction and discharge nozzles, faced and drilled to conform to ANSI Class 125 lb. standard. Pumps of sizes greater than five inches (5") shall be furnished with suction elbows that are separate and not integrally cast with any other part of the pump. Suction elbows shall be designed to prevent cavitation. Guide vanes shall not be used in suction nozzles.

(iii) Pumps of sizes greater than five inches (5") shall be provided with either fabricated structural steel supports or cast iron ribbed supports. Cast iron supports shall be cast integral with the pump casing or suction nozzle.

(iv) Base or sole plates shall be provided. Plates shall be anchored by stainless steel bolts with stainless steel lock washers and grouted to reinforced concrete pedestals. Hardened steel jacking screws for leveling and for aligning of pumps shall be provided. Mating surfaces shall be machined and all holes drilled and not be burned.

(v) Intermediate drive shaft sections should be not more than 12 feet in length. Where more than one drive shaft is required, self-aligning steady bearings shall be provided at each intermediate location. Bearings shall be equipped with mechanism to allow alignment adjustments. Bearing and shaft guards shall be provided. Safe access to bearing and guards shall be provided. Grease fittings shall be equipped with extension tubing to facilitate lubrication.

(vi) Drain and air release lines shall be provided for all pumps. Drain lines shall be installed at the packing drip reservoir

and at the centerline of the suction pipe. Air release line shall be installed at high point of pump casings. Connecting points shall be bossed, drilled, and tapped. Minimum size shall be d inch. Air release lines from pump to the first valve shall be brass. Provisions shall be made for a sampling tap for wastewater unless waived by City.

(vii) Other features of pumps shall be as follows:

(a) Bearing Housing: Of single cast piece or fabricated structural steel.

(b) Bearings: Not less than two.

(c) Shaft Sleeve: Replaceable stainless steel sleeve, from the outside end of the seal gland to the impeller, and set screwed to the drive shaft.

(d) Sealing Gland: Double mechanical seal with suitable fluid sealing/lubrication system.

(e) Casing and Impeller Wearing Rings: Stainless steel and "Z" or "L" shaped.

(f) Suction Plate: Separate from suction elbow (pumps five inches (5") and smaller may be excepted).

(g) Taper Pins and Jacking Screws: On all machined joints and handholes.

(h) Eyebolts or Other Provisions For Lifting: On volute and bearing housing.

(i) Impeller Locknut: With smooth surface, no sharp corners and edges, and easily replaceable.

(j) Seals: On both the upper and lower sections of the bearing housing.

(k) Tapered Shaft: Tapered for the full length of fit and keyed to the impeller. Exception may be made for four inch pumps.

(viii) Stock bronze fitted pumps with cast iron casings and bronze impellers are permitted for temporary installations. Impeller rings and shaft sleeve shall be bronze.

b. Wet Well Submersible Pump.

(i) Handholes shall be provided on the periphery of pump casings and suction elbows for purposes of inspection and removal of obstructions. Handhole covers shall be flanged and secured to bossed sections and shall have interior surfaces formed to match interior surfaces of casting to which attached. Pump casing handhole shall be located so that visual inspection can be made of the discharge end as well as the volute. Handholes shall be a minimum of four inches (4") or about half of the pump size.

(ii) Pumps shall have flanged suction and discharge nozzles, faced and drilled to conform to ANSI Class 125 lb. standard. Pumps of sizes greater than five inches (5") shall be furnished with suction elbows that are separate and not integrally cast with any other part of the pump. Suction elbows shall be designed to prevent cavitation. Guide vanes shall not be used in suction nozzles.

(iii) Base sole plates shall be provided. Plates shall be anchored by stainless steel bolts with stainless steel lock washers and grouted to reinforced concrete pedestals. Hardened steel jacking screws for leveling and for aligning of pumps shall be provided. Mating surfaces shall be machined and all holes shall be drilled and shall not be burned.

(iv) Drain and air release lines shall be provided for all pumps. Drain lines shall be installed at the centerline of the suction pipe. Air release line shall be installed at high point of pump casings. Connecting points shall be bossed, drilled, and tapped. Minimum size shall be d inch. Air release lines from pump to the first valve shall be brass. Provisions shall be made for a sampling tap for wastewater unless waived by the City.

(v) Other features of pumps shall be as follows:

(a) Pump shaft shall be stainless steel.

(b) Bearings: Not less than two, sealed, and grease lubricated.

(c) Seal: Tandem, double mechanical seal running in an oil reservoir. It shall be composed of two separate lapped-face seals, each consisting of one stationary and one rotating tungsten-carbide ring; with each

pair held in contact by a separate springs. The compression spring shall be protected against exposure to the pump liquid.

(d) Casing and Impeller Wearing Rings: Stainless steel and "Z" or "L" shaped.

(e) Suction plate: Separate from suction elbow (pumps five inches (5") and smaller may be excepted).

(f) Taper Pins and Jacking Screws: On all machined joints and handholes.

(g) Eyebolts or Other Provisions for Lifting: On volute and bearing housing.

(h) Impeller Locknut: With smooth surface, no sharp corners and edges, and easily removable and replaceable.

(i) Tapered Shaft: Tapered for the full length of fit and keyed to the impeller. Exception may be made for four inch (4") pumps.

(j) Provide sensors and alarms for:
- High temperature
- Vibration
- Seal leakage

5. *Motor Construction.*

a. Dry Pit Motor.

(i) Motors shall conform to the latest standards of the NEMA and the IEEE. Motors shall have ample capacity to operate the pumps under all head and discharge conditions without overloading. Starting current taken by the motors shall not exceed the values as regulated by PG&E or as permitted by the emergency generator. Motors shall be capable of safely rotating in the reverse direction at runaway speed without damage to appurtenances under shutoff head. Motors shall operate pumps through flexible shafts and couplings. Vertical shaft motors mounted on floors shall be furnished with rugged cast iron or steel foundation rings. Motors shall be induction type, drip proof and suitable for operation from 230/460 volts, 3 phase, 60 cycle A.C. power systems. Motors shall have a service factor of 1.15. All pump motors

shall have running time meters installed at the starter. All pump motors above 20 HP shall have an ammeter installed at the starter.

Dry pit sump pump motor shall have running time meters installed at the starter.

(ii) Motors shall be grease lubricated. Motors 7 HP or larger shall be provided with space heaters. Variable speed motors shall be provided with a RPM measuring device with a 4 to 20 milliamp output and a panel mounted digital RPM indicator.

b. Submersible Motor.

(i) Motors shall conform to the latest standards of the NEMA and the IEEE. Motors shall have ample capacity to operate the pumps under all head and discharge conditions without overloading. Starting current taken by the motors shall not exceed the values as regulated by the PG&E or as permitted by the emergency generator. Motors shall be capable of safely rotating in the reverse direction at runaway speed without damage to appurtenances under shutoff head. Motors shall be suitable for operation from 230/460 volts, 3 phase, 60 cycle A.C. power systems. Motors shall have a service factor of 1.15. All pump motors shall have running time meters installed at the starter. All pump motors above 20 HP shall have an ammeter installed at the starter. The motor power wiring shall be brought up directly to the level of the MCC.

(ii) Pump motors shall be housed in a watertight casing and shall have moisture resistant insulated windings. Pump motors shall have cooling characteristics suitable to permit continuous operation in a non-submerged condition.

6. *Indicating Pressure Gauges*. Indicating pressure gauges shall be provided at discharge nozzle and suction plate of pumps. Indication shall be in feet. Isolation valves and stainless steel diaphragm seals shall be provided at gauges.

7. *Testing*. All wastewater pumps shall be factory tested in accordance with the ASME Power Test Codes or the Standards of the Hydraulic Institute. Five (5) certified copies of the pump curves and data shall be furnished with each pump requiring drive motors 40 HP or smaller. For pumps requiring drive motors greater than 40 HP, a witness shop test shall be required and five (5) certified copies of the pump curves, data and report shall be

furnished with each pump. Each pump casing shall be tested under a hydrostatic pressure of not less than 60 psi. All impellers, including spares, shall be statically and dynamically balanced.

All electric motors shall be tested by the motor manufacturer. Routine tests are required for motors rated at 40 HP or less and Witnessed Complete Tests shall be required for motors larger than 40 HP. Five (5) copies of the certified or witnessed test data shall be furnished for each motor.

All pumps shall be field tested to demonstrate satisfactory operations.

8. *Spare Parts*. All installations shall be furnished with the following minimum spare parts:

   a. For each pump:

      (i) One set renewable sleeve for the pump shaft.

      (ii) One set of gaskets for all pump casing joints.

      (iii) One set of wearing rings, complete, for both pump casing and impeller.

      (iv) All parts recommended in the manufacturer's O&M manual.

   b. In addition to the above, provide for each different size pump:

      (i) One complete pump, including suction plate.

      (ii) One set of each type of bearing used in the pump and shafting.

      (iii) One packing gland complete with rings, nuts, bolts, and one box of coil packing (if applicable)

      (iv) One mechanical seal assembly (if applicable).

   c. For submersible pump:

      (i) One complete pump unit with stand.

   d. For motor:

      (i) One set of bearings, complete for each size of motor 30 HP or larger.

(ii) One set of space heaters for each size of motor.

(iii) One set of brushes for each wound rotor motor.

(iv) One brush holder assembly (for each size of wound rotor motor).

e. For generator:

(i) All parts recommended in the manufacturer's O&M manual.

(ii) One circuit board for the voltage regulator.

f. For ventilation fan:

(i) One set of fan drive belts.

B. Starters and Controls:

1. *Liquid Level Controls.* The operation of wastewater pump motors shall be automatically controlled by liquid level sensing devices, actuated by wastewater level fluctuations in the wet well. Ultra Sonic/Transducer type with a 4-20 MA output should be provided. Automatic control settings shall be manually adjustable.

Duplicate control units shall be provided for all pump stations equipped with split wetwell chambers. Controlling devices should also be capable of alternating the lead pump and setting off high and low level alarm. The operating range of controlling devices shall conform to the requirements of minimum pump cycle and maximum detention time.

2. *Selector Switches.* HAND-OFF-AUTO selector switches shall be provided to operate pumps. Selector switches shall be located at the motor control center and watertight switches next to pumps. Both selector switch settings must be the same in order for the pump to operate (Example: HAND-HAND or AUTO-AUTO).

Automatic and manual control for variable speed pumps shall be capable of being adjusted over the effective speed range.

3. *Starters.* Unless otherwise restricted by PG&E, starters shall be of the combination, magnetic, across-the-line type. Starters shall be solid-state.

4. *Control Centers.* Starters shall be mounted and wired as an integral part of free standing, unitized, enclosed control centers. Control centers shall be designed and constructed in accordance with the latest standards of the

NEMA and the IEEE. Starters for temporary installations may be surface mounted. Control center cabinets shall be installed to permit full opening of doors without interference from adjoining cabinets, walls or other equipment. Split hinge doors may be used to prevent opening interference.

All major components of control centers shall be by one manufacturer. If more than one control center is to be installed it shall be of the same type and manufacturer who has a qualified electrical service engineer permanently assigned and residing in Northern California. All panel units, devices, indicating lights, and instrumentation shall be identified by engraved nameplates or metal collars. All starters shall be of the draw out type whereby all control wiring and power conductors are automatically disconnected upon removal of the starter.

5. *Indicating Lights and Elapsed Time Meters*. Appropriate indicating lights and elapsed time meters should be installed for each starter. The running time meters shall be non-resetting, digital display, including a one-tenth hour feature. Indicating lights should be of the push-to-test type or light emitting diode (LED).

C. Instrumentation and SCADA System:

SCADA software and PLC's shall conform to equipment as currently used by the City including General Electric Series 90-30 PLC's and Intellution FIX™ software, or city approved equal.

1. *Instrumentation*. Pump stations shall be provided with instrumentation and SCADA systems which include the following:

   a. Telemeter.

      (i) Discharge flow.

      (ii) Discharge pressure.

      (iii) Wet well level.

      (iv) Run-time pump hours.

   b. Report-back of operational status:

      (i) Sewage pumps.

      (ii) Sump pumps.

      (iii) Emergency generator.

      (iv) Other items of importance to operations.

c. Alarms:

(i) Normal power source failure (i.e. low voltage, high and low frequency, or phase reversal).

(ii) Alternate power source failure.

(iii) Generator operating.

(iv) Main buss power failure.

(v) Low level in wet well.

(vi) High level in wet well.

(vii) High level in pump room sump.

(viii) Other equipment failures which could endanger pump station operations.

(ix) Diesel Engine Supervision (i.e., starter failure, low speed, low oil pressure, high water temperature, etc.)

(x) Building intrusion.

2. *Remote Controls.* When conditions dictate that installations be remotely controlled from supervisory stations, the following additional functions shall be provided:

a. Report-back:

(i) Operational status of each pump (running or not running).

(ii) Operational status of any other item of importance to remote control operations.

b. Supervisory remote controls:

(i) Start and stop pumps.

(ii) Other functions of importance to remote control operations.

c. Alarms:

(i) Warning of transfer to supervisory remote control operations.

(ii) Other alarms of importance to remote control operations.

3. *Relay to Department of Public Works.* All readings, alarms, and indications, shall be relayed to supervisory stations designated by the City Engineer.

4. *Suppliers*. Instrumentation systems should be provided by one integrator with field and shop maintenance facilities and full time service engineers located in Northern California.

5. *Flow Meters*.

   a. Flow meter receiving instruments at the pump station shall be capable of totalizing, indicating, and recording of flows.

   b. Recorder shall be electronic type with month duration, four inch (4") wide circular paper chart and a visible face of approximately four inches (4").

   c. Indicator shall be four inches (4") long or shall be digital with approximately one inch high numerals.

   d. Flow meter pressure differential producers shall be of the standard venturi type. Insert type differential producers or Dall tubes shall not be permitted.

   e. Magnetic flow meters may not be used.

   f. All sensors for temperature, pressure, flow, and all other measurement outputs must have 4-20 mA outputs if possible.

6. *Level Meters*.

   a. Wet well level meter receiving instruments at the pump station shall be capable of indicating and recording wet well levels.

   b. Recorder shall be electronic type with month duration, four inch (4") wide circular paper chart and a visible face of approximately four inches (4").

   c. Indicator shall be four inches (4") long or shall be digital with approximately one inch high numerals.

   d. Fuel level (inventory) meter shall be installed in the generator room for diesel fuel tank systems.

7. *Pressure Meters*.

   a. Force main pressure meter receiving instruments at the pump station shall be capable of indicating and recording pressure.

   b. Recorder shall be electronic type with month duration, four inch (4") wide circular paper chart and a visible face of approximately four inches (4").

c. Indicator shall be four inches (4") long or shall be digital with approximately one inch high numerals.

d. Single recorder with three (3) inputs may be used.

8. *Instrumentation Panels.* All pertinent receiving instruments, devices, alarms, indicating lights, and remote controls shall be mounted on centralized instrument panels. All items shall be identified with engraved nameplates. Electrical power to the panel and all instruments shall be through an uninterruptible power supply unit.

9. *Indicating Lights.* Appropriate indicating lights shall be provided to show the status of equipment operation, alarms, controls, etc.

   Indicating lights shall be of the push-to-test type or light emitting diodes (LED).

10. *Amperage Meter.* Provide an amperage meter for each sewage pump motor. Amperage metering to monitor all legs.

6.09 PIPING AND VALVES

A. Wastewater Pump Piping:

1. Discharge and header (manifold) piping for wastewater pumps shall be not less than four inches (4") in diameter. Suction piping shall be not less than six inches (6") in diameter.

2. Velocities in wastewater pump piping shall be as follows:

a.	Suction from wet well	5 fps (desirable max.) 6 fps (absolute max.)
b.	Discharge to header	7 fps (desirable max.) 8 fps (absolute max.)
c.	Header (Manifold)	6 fps (desirable max.) 7 fps (absolute max.) 2 fps (desirable min.) 1.5 fps (absolute min.)
d.	Discharge risers	3 fps (absolute min.)

3. Pipe and fittings shall be cast iron or ductile iron, cement lined and coated on the inside. Cast iron pipes shall be Class 150 and fittings ANSI Class 250. Ductile iron pipe shall be Class 52-minimum. Buried pipe and fittings shall be protected on the outside with an approved corrosion protection

coating and cathodic protection. Zinc chromate primer shall be used on the outside for exposed piping to be painted with enamel. Joints shall be flanged with flanges faced and drilled to conform to ANSI Class 125 lb. standard with full face gaskets. Adequate braces and supports shall be provided for piping to ensure no undue strains are induced.

4. Piping shall be arranged so that all pumps discharge into a common header. In permanent pump stations, discharge lines shall not enter headers perpendicularly. Base bends, properly supported on concrete pedestals, shall be provided at the bottom of vertical risers. Headers shall be properly blocked to resist water hammer.

5. Suction lines shall have turned-down bellmouth inlets. Bottom of the bellmouth shall not be more than D/2 nor less than D/3 (in which D is the diameter of the suction bell) above the floor of the wet well. Reducers used on the suction side of pumps shall be of the eccentric type to prevent air pockets.

6. Gate valves in suction lines, except for temporary pump stations and pump stations with capacity 1 mgd or smaller, shall be provided with extension stems to floor stand operators on the ground level floor. Gate valves shall be solid wedge, rising stem type with iron body, bronze trimmed, outside screw and yoke, and flanged ends. Flanges shall conform to ANSI Class 125 lb. standard except where high pressures are encountered. Valve operators for valves 16 inches or larger shall be electrically motorized. All motorized actuators shall have manual operation back-up provisions.

7. Swing check valves shall be provided on the discharge side of pumps and shall be placed horizontally between the gate valves and the pumps. Where damaging effects of water hammer are anticipated, valves with controlled rate of closure shall be installed. Swing check valves shall be iron bodied, bronze trimmed with outside lever and weight, and flanged ends. Flanges shall conform to ANSI Class 125 lb. standard except where high pressures are encountered.

B. Sump Pump Piping: All sump pump fixed piping in wetwells shall be schedule 80 PVC and in dry wells shall be brass. A gate valve and check valve shall be installed on the discharge line. Flanged joints or unions shall be provided on the discharge line to facilitate dismantling of the piping. Minimum diameter of the discharge line shall be two inches (2"). Velocity in discharge risers shall not be less than 3 fps. The discharge point shall be installed at the highest elevation possible to prevent reverse flow when the wet well is filled to capacity. Typical discharge elevation shall be under and close to the ground floor.

The sump pump shall be fitted with a flexible PVC hose, minimum two inches (2") diameter. Camlock fittings shall be provided for the PVC hose connectors to the pump and fixed piping.

C. Waste, Drain, and Vent Lines: Pipe and fittings shall be extra heavy cast iron soil type, except piping installed above ground or inside pump stations and piping two and one-half inches (2 ½") in diameter or smaller, may be standard weight galvanized steel pipe with standard cast iron screwed, recessed drainage fittings. Clean-outs shall be provided as necessary and shall be solid cast brass, rough finish with square heads. Bronze access frames and covers shall be provided for finish floors and walls

Frames and covers for wall installation shall be square with polished finish. Those for floor installations shall be round with scoriated finish. Clean-outs shall be readily accessible.

D. Potable Water Piping: Water piping and fittings shall be copper except that water piping one inch (1") in diameter and smaller within structures shall be Type K copper pipe with standard brass fittings.

E. Sprinkler System Piping: Sprinkler system piping shall be solvent welded schedule 40 PVC. Lawn risers shall be PVC or polypropylene and shrubbery risers shall be galvanized steel.

F. Piping Between Flow Tube and Instruments: Piping between flow tube to flow transmitter shall be one inch (1") minimum diameter 316 stainless steel. Horizontal runs shall have a minimum declining slope of one-quarter inch (¼") per foot from the flow tube to the in-station equipment and shall be permanently supported and braced to prevent sediment traps and/or air pockets. Piping shall be connected to the flow tube on a horizontal axis. 316 stainless steel valves, unions and necessary fittings shall be installed close to the flow tube to facilitate maintenance. 316 stainless steel ball valves, gate valves, unions, tees and elbows shall be used on the entire system. Flow transmitters and diaphragm seals shall be installed inside the pump station and mounted for easy maintenance access.

G. Pipe Sleeves: Pipe sleeves shall be provided whenever small piping passes through concrete walls. Wall pipe shall be used for larger piping.

6.10 EMERGENCY PROVISIONS

Emergency facilities shall be provided to protect pump stations and the community from possible damages that may result from power failure, emergency maintenance shutdown, pumping capacity being exceeded, or other unforeseen circumstances.

A. Standby Electric Power Equipment: Stations shall be equipped with a diesel powered generator(s) to provide electric power to pump the design flow. The generator's synchronous speed shall be 1800 RPM. The engine-generator set shall be a new, standard, current model and in accordance with ANSI and NEMA standards. Provide vehicular access including a pad for a portable generator. Fuel

daytank if required, of approved capacity, shall be equipped with two fuel pumps with a manual feature for automatic primary and standby operations.

1. Operation of the emergency facilities shall be automatic upon power failure. Power failure monitors shall monitor all three phases. Monitoring of one phase of a three-phase system is not adequate.

2. Automatic load transfer switches shall conform to PG&E requirements. When possible, bypass of the automatic transfer switch and manual override of automatic functions shall be provided.

3. A plug for connection of a portable load bank shall be provided to fully load the generator periodically. The connection shall be made to the generator side of the transfer switch via a circuit breaker. This connection can also be used to connect a portable generator when the installed generator is not available for service.

4. Telemetry and SCADA systems shall be powered through an uninterruptible power supply unit. The uninterruptible power supply shall be sized to furnish emergency power for 8-hours minimum.

B. Fuel Storage System: The system shall comply with Federal, State and City regulations. The fuel tank capacity shall be based on two (2) days at design sewage flow and five (5) days at the daily average flow. However, the fuel tank shall not be smaller than 1,000 gallons.

Underground fuel tank installation shall be designed to prevent surface water infiltration into the fuel tank system.

A leak alert monitor shall be provided with capabilities to display fuel inventory, and with audio and visual leak alarms.

C. Portable Pump Facilities: Pump stations shall be equipped to pump wastewater from the wet well into the force main with a portable pump. This shall be accomplished by providing fixed discharge and suction piping for the portable pump with connections to the force main and the wet well. The portable pump discharge piping shall be connected to the downstream side of the flow meter tube and shall include a gate valve, 90° elbow, flanged reducer, and a blind flange. The suction piping shall be connected to the wet well and shall include piping with a 90° elbow and a blind flange. All piping for the portable pumps shall be sized with consideration to the capacity of the installed pumps and the operating characteristics of the available standby pumps. Portable pumps shall be located near the wet well to minimize the possible occurrence of cavitation. Provide vehicular access including a pad for a portable engine-driven Pump.

6.11 MISCELLANEOUS

A. Potable Water Supply: All pump stations shall be provided with a potable water supply system for sanitary fixtures, lawn sprinkling, washdown, and other maintenance purposes, as required.

Adequate and conveniently located water outlets shall be provided for flushing and washing purposes. Hose bibs shall be 3/4-inch with vacuum breakers at all floor levels and outside of pump station. Stop cock valves shall be provided immediately before each hose bibb located within the building.

Two conveniently located 1-1/2 inch diameter standpipes shall be provided adjacent to the wetwell. The standpipes shall have 1-1/2 inch angle globe valves for National Standard fire hose thread and end cap with chain. A 3/4-inch hose bib with vacuum breakers shall be installed on the standpipe directly below the ½ inch globe valve.

The main water supply line shall be two inches (2") in diameter, metered and equipped with a master valve located within the station's perimeter fence. A two inch (2") reduced pressure backflow preventer shall also be provided and located within the station's perimeter fence.

Under no circumstances shall potable water supply be directly connected to sewage pumps or piping. Seal water, positive air gap and/or pneumatic water tanks shall be provided as necessary. The potable water supply system shall conform to City, State, and Federal codes and regulations.

B. Painting: Pump stations shall have maintenance-free colored exterior finish, subject to City Engineer approval. City may, at its own discretion, approve a painted exterior finish. Painting shall be in accordance with the best practice and in strict compliance with the paint manufacturer's instructions and recommendations. No lead-base primer or paint shall be used. A minimum of two (2) finish coats over one prime coat shall be required.

C. Corrosion Protection: All materials and equipment exposed to corrosive conditions shall be either corrosion resistant or protected with appropriate protective coatings or linings.

D. Odor Control: All stations shall be provided with a 6-inch wetwell vent pipe to be used for treatment of foul odors. The vent pipe shall be schedule 40, 316 stainless steel, permanently installed through the wetwell slab and covered with a blind flange. A receptacle, at appropriate voltage, shall be installed near the vent pipe.

6.12 FORCE MAINS

A. Locations: Force mains shall be located in streets or along road rights-of-way.

In locating force mains, ease of installation and maintenance and elimination of high points shall be considered. Air release valves shall be installed at high points.

B. Sizing:

1. Force mains shall be sized not less than six inches (6") in diameter (four inches (4") upon approval).

2. Velocities in force mains shall be as follows:

   a. Minimum: 3.0 fps

   b. Maximum: 10.0 fps

3. Force mains shall be designed to carry the maximum rate of pumping without excessive frictional head loss. Total dynamic head should not exceed 100 feet.

C. Materials: The material selected shall be adapted to local conditions with special consideration given to the quality of wastewater, possible septic conditions, soil characteristics, internal pressure, abrasion, external loadings, foundations, necessity of reducing the number of joints and other similar problems. Corrosion resistant lining, coating, wrapping, and cathodic protection shall be used when corrosion protection is required. Insulating flanges or fittings may be required at entrance or exits from buildings. The following material is acceptable for force mains subject to the conditions indicated:

1. *Ductile Iron Pipe (Cement or other approved lining and Coated).* Ductile iron pipe shall be tape wrapped and have cathodic protection where the force main may be subjected to external corrosion.

D. Minimum and maximum Cover and Clearances: Shall conform to the requirements as set forth in Subsection 5.07 of these standards.

E. Alignment and Grade: Pipe shall be laid in a straight alignment and with constant grades. Force mains may be curved by deflecting the joints to eliminate the necessity for fittings. In no case shall the deflection exceed the maximum as set forth by the manufacturer for the type of pipe used. Fittings shall be used when alignment or grade changes cannot be accomplished by joint deflection.

F. Appurtenances:

1. *Air Bleeders*. Air bleeders and valves shall be provided at high points. A corporation stop shall be provided at the force main connection. Internal and external corrosion shall be considered.

2. *Blow Offs*. Blow off valves and vaults will not generally be required but may be required where sedimentation may occur.

3. *Emergency By-Pass*. Emergency by-pass facilities shall be provided.

G. Structural Considerations:

1. *Pipe Loads.* Force mains shall be designed to withstand all internal and external forces to which they may be subjected. Internal forces will be the pressure from the wastewater and the water hammer effect. External forces shall consider loads due to Trench backfilling and Superimposed uniform and concentrated loads.

2. *Foundation.* Soil conditions shall be determined by test borings. Beddings shall be designed to adequately support pipe and minimize settlement.

3. *Reaction Blocks and Anchorage*. Reaction blocks and anchorage shall be provided at bends and fittings and may be required at joint deflections.

H. Termination: Force main discharge outlets shall be designed to minimize turbulence and sulfide release and be submerged at all times. The interior surface of the outlet manhole and first downstream manhole shall be protected with plastic lining.

1. The severity of odor and its treatment shall be considered. A suitable odor control means shall be submitted to the City Engineer for approval.

2. Gravity connection to the force main discharge manhole and connection to the first leg of the gravity line exiting the discharge manhole will not be permitted.

SECTION 7: WATER DISTRIBUTION SYSTEM DESIGN

7.01 GENERAL

The purpose of water design standards are to protect the health, safety and welfare of the general public and to promote good public utility practices, to encourage efficiency and economy, and to establish minimum standards to be hereafter observed in the design, construction and operation of waterworks facilities by the City of Woodland.

Water system improvements shall be designed to serve the ultimate level of development as defined in the City of Woodland's General Plan. All improvements shall conform with, but not be limited to, the California Safe Drinking Water Act and Related Laws (commonly referred to as the "Drinking Water Law Book"), the California Building Code (CBC), the California Plumbing Code (CPC), the National Board of Fire Underwriters, the California Department of Health Services, the California Fire Code, these Engineering Standards, and the City's current Water System Master Plan documents.

7.02 DESIGN PLAN REQUIREMENTS

Plans shall be drafted to present plan and profile views and shall show existing and proposed water main sizes, fire hydrants, water valves, water main blow-off valves, trench details, crossings with other utilities, lateral distances to nearest sanitary and storm sewer lines, top of pipe elevations at all grade changes, and surveying coordinates (stationing) of water main intersections, points of direction change, water main taps, water main terminations, and service locations. If public water mains are to be located outside of public street sections, legal descriptions of proposed rights-of-way or easements shall be submitted with the plans. (Refer to Section 2.03, Design Standards).

7.03 FIRE FLOW

The following minimum fire flows shall be used for system design in accordance with City Fire Department and Insurance Services Office (ISO) requirements:

Design Fire Flow By Land Use Designation	
LAND USE DESIGNATION	FIRE FLOW, GPM
Single Family Residential, spacing > 10 ft.	1,000
Single Family Residential, spacing less than or equal to 10 ft.	1,500
Light Commercial	2,500
Planned Unit & Multiple Dwelling Areas	2,500
Principal Business Districts	3,500
Industrial Areas	4,000
Higher Value Buildings	4,000

7.04 DESIGN FLOW

Design flow for sizing public water distribution mains shall be based on the following:

$Q_1 = (2.2 \times A) + F$, and $Q_2 = 3.5 \times A$,

Where:

Q_1 = Maximum-day demand plus fire flow, gpm,
Q_2 = Peak-hour demand, gpm,
A = Average day water demand for service area, gpm,
F = Fire flow requirement, gpm.

The average day water demand, A, is calculated by multiplying service area acreage by a water demand coefficients as listed in the following table. NOTE: That "A" should be weighted for service areas with more than one land use classification.

Water Demand Coefficient By Land Use Classification		
LAND USE CODE	LAND USE CLASSIFICATION	GPM/GROSS-ACRE
RR	Rural Residential	0.4
VLDR	Very Low Density Residential	1.3
LDR	Low Density Residential	2.2
MDR	Medium Density Residential	4.5
NC	Neighborhood Commercial	1.1
GC	General Commercial	1.4
SC	Service Commercial	1.2
HC	Highway Commercial	1.4
BP	Business Park	1.0
I	Industrial	1.7
PS	Public Services (schools)	1.4
OS	Open Space (irrigated park)	1.5
PN[1]	Mixed Land Use	2.0

[1] *Calculated by weighting demand coefficients by land use acreages (Table 2-4, General Plan EIR, 1996).*

Estimates of water demands for new development areas must be specified in the design phase. The City will incorporate use of its computer model into the evaluation of water system designs. Hazen-Williams coefficient of 130 shall be assumed for cement lined ductile iron pipes and 140 for PVC pipe.

7.05 NORMAL OPERATING PRESSURES

Normal operating pressures in water distribution system mains of not less than 40 psig or more than 75 psig shall be provided at service connections. Pipeline headloss should be limited to approximately 5 feet/1,000 feet.

7.06 MINIMUM OPERATING PRESSURES

During periods of peak day demand plus fire flow, Q_1, or peak-hour demand conditions, Q_2, minimum allowable water system pressures shall be 20 psig and 35 psig, respectively.

7.07 PIPELINE VELOCITIES

Pipeline design velocities shall be limited to 8 fps and 10 fps for peak-hour and peak day plus fire flow conditions, respectively.

7.08 PIPELINE LAYOUT

Water mains shall be laid out in grids and loops. Dead-end water mains shall be installed only if:

A. Looping or gridding is impractical due to topography, geology, pressure zone boundaries, unavailability of easements or locations of users; or

B. The main is to be extended and the planned extension will eliminate the dead-end conditions.

Grids shall include minimum size 8 inch pipelines at one-quarter (1/4) mile intervals, and minimum 12 inch lines at one-half (1/2) mile intervals. All public water supply pipelines shall be located within the right-of-way of public streets or roads. Pipelines larger than 8 inch shall normally be located in collector or arterial streets.

If it is necessary to install a water distribution main within a private road, the water easement shall be the width of the paving plus one foot each side. Water easements over water distribution mains located on commercial, industrial, or apartment properties shall have a minimum width of 15 feet. The water main shall be centered in the easement.

If it is necessary to install a water distribution main within a landscape corridor, then no trees shall be planted within five feet (5') of the water main. The water distribution main shall be centered within a 15 foot wide water easement. The landscape plans for the corridor shall be submitted prior to approval of the improvement plans.

7.09 DISTANCES FROM SANITARY SEWER LINES

Water mains shall be installed:

A. At least ten feet horizontally (outside clearance) from and one foot higher than sanitary sewers located parallel to the main.

B. At least one foot higher (outside clearance) than sanitary sewers crossing the main. Sections of water mains crossing sewer lines shall be one continuous length of ductile iron pipe approximately 18'-20' in length centered on the sewer main.

C. Ten feet minimum from sewer lines joints where sanitary sewers cross a main.

D. In separate trenches.

E. The location of the water main in any street shall be six feet (6') from the centerline of the street, on the opposite side of the centerline in relation to the sanitary sewer line.

7.10 TYPE OF PIPE

Pipe used for public water distribution shall be ductile iron pipe material or PVC pipe conforming to the provisions of the Construction Specifications Section 12, Water Distribution System.

In areas where either (1) seasonal or permanent high groundwater or (2) drainage from road base during rainfall events will saturate proposed bedding material a licensed engineer who specializes in soil corrosion analysis will evaluate the conditions for the proposed work. The soils corrosion engineer will provide a Geotechnical Investigation Report to the City that includes test results, evaluation of conditions and recommendations for groundwater handling and corrosion protection for the metal pipe, fittings and appurtenances. Recommendations acceptable to the City will be incorporated into the proposed work.

7.11 MINIMUM SIZE OF PIPELINE

The typical minimum size of pipeline shall be eight inches (8") in diameter. A six-inch (6") pipeline may be used on dead end lines having no fire hydrants.

Where a new pipeline is connecting to an existing pipeline the new pipeline size shall be equal to or larger than the existing pipeline. New pipelines shall not use 10 inch pipe, fittings or valves except for the transitions fittings needed to connect to an existing 10 inch pipe.

7.12 VALVE LOCATIONS

The distribution system shall be equipped with a sufficient number of valves so that no single shutdown would result in the removal from service of a length of pipe greater than 500 feet in school, commercial, industrial, or multiple family dwelling areas, or greater than 800 feet in other areas, i.e. residential, or more than two fire hydrants in any area. Avoid locating valves on deep (>60") water line sections.

Fire service lines greater than or equal to six inch (6") diameter and services to hospitals, dialysis clinics, businesses with boilers and large 24-hour users require valves on the water main on both sides of service connections within 50 feet.

7.13 FIRE HYDRANTS

Hydrants shall have a maximum spacing of 300 feet in all areas and as required by the Fire Marshal.

All fire hydrants shall be painted in accordance with City specifications (Construction Specifications, Section 12.02). All fire hydrants which are privately owned and/or fed by water lines with boosted pressure shall be indicated as such on design plans.

Blue reflective markers shall be installed at all fire hydrant locations in accordance with Construction Specifications, Section 12.02). Fire hydrants at intersections or on divided streets shall have markers on each street in each direction.

All fire hydrants shall be suitably protected from vehicular damage using bollards when required by the City. The placement of bollards shall permit full access to hydrant nozzles and shall not interfere with the operation of the hydrant.

7.14 METERED WATER SERVICE

Meters shall be required for all service connections except connections that are for fire protection purposes only. Each single family dwelling unit shall have a separate service and meter. Meter shall be equipped with automatic meter reading equipment including absolute encoder systems.

7.15 WATER METER SIZING

Service meters shall be supplied and installed by the building or landscape contractor. Water service lines and meters shall be sized by the developer's engineer, using the design procedures outlined in American Water Works Association Manual M22, "Sizing Water Service Lines and Meters."

The selection of the class and size of meter shall be based on the flow requirement, type of use, pressure loss through the meter, and safety requirements. Irrigation demand shall be considered as a continuous type of flow for meter selection purposes. Internal building fire

flows are considered peak flows. All residential flow shall include fire sprinklers. Minimum service tap and line size for **all** services shall be 1 ½ inch.

The following tables list some examples of the use of different types of meters in different applications and the typical meter flow ranges. For accurate design specifications, consult the manufacturer's specifications. The designer shall submit required calculations for approval by the City Engineer.

METER TYPE	SUGGESTED USE
Positive Displacement	Single-family residential Apartment buildings with less than 100 units Small businesses (e.g., filling stations, restaurants, small hotels, motels, small office buildings and retail stores, etc.) Schools and other public buildings with small irrigation demands
Compound Meters	Schools with small irrigation system Laundries Large apartment buildings
Turbine Meters	Large hotels Factories Large irrigation systems Large office buildings Pump discharge

Positive-Displacement Meters Meeting AWWA Specifications			
SIZE IN.	MIN. FLOW RATE, GPM	MAX. FLOW RATE, GPM	RECOMMENDED CONTINUOUS FLOW, GPM
1	0.75	50	25
1½	1.5	100	50
2	2	160	80

Compound Meters Meeting AWWA Specifications			
SIZE IN.	MIN. FLOW RATE, GPM	MAX. FLOW RATE, GPM	RECOMMENDED CONTINUOUS FLOW, GPM
2	0.25	160	80
3	0.5	320	160
4	0.75	500	250
6	1.5	1000	500
8	2	1600	800

Class II Turbine Meters Meeting AWWA Specifications			
SIZE IN.	MIN. FLOW RATE, GPM	MAX. FLOW RATE, GPM	RECOMMENDED CONTINUOUS FLOW, GPM
2	4	160	100
3	8	350	240
4	15	630	420
6	30	1400	920
8	50	2400	1600

All meters supplied to the City shall accurately record and display 100 +/- 1.5 percent of the actual flow.

7.16 BACKFLOW PREVENTION

All non-residential domestic and irrigation water services and private water conveyance systems shall include backflow prevention assemblies. Backflow prevention assemblies are also required for residential water services which have access to water from private wells, or any other alternate water supplies such as reclaimed water, or graywater. Fire service lines will require backflow prevention assemblies where there are onsite private water storage facilities or booster pumps or as determined by the Fire Marshal. All backflow prevention assembly installations shall be located on the customer side of the water meter and within P.U.E. or public Right of Way.

Selection of the appropriate backflow prevention assembly shall be based on general level of hazard. The following table presents levels of hazard and associated acceptable backflow prevention assemblies:

BACKFLOW PREVENTION ASSEMBLY SELECTION	
APPLICATION	TYPE
Residential site w/ alternate water supply	Double Check Valve Assembly
All normal commercial & industrial sites	Double Check Valve Assembly
Special Hazard	Reduced Pressure Principle Assembly or Air Gap
Fire Service	Double Check Valve Detector Check Assembly

Only backflow prevention assemblies on the annually updated list approved by the State of California, Department of Health Services shall be considered for service installation. A list of approved backflow prevention assemblies is available upon request at the Public Works Department, Utilities Branch offices, 655 N. Pioneer Avenue, Woodland. The list is also available on the city website at Cityofwoodland.org, Public Works Dept, Backflow Information, Cross Connection Program.

7.17 SERVICE TRENCH

Water services in residential areas may be placed in a common trench with the sanitary sewer lateral per Detail 505. The location of the water service at back of walk shall be within an area five feet (5') maximum from the side property line.

7.18 WATER MAIN TRENCH COVER

All water mains shall have a minimum and normal trench cover of 42 inches (42") in streets and 36 inches (36") in undeveloped areas. Maximum pipe cover shall be 60 inches (60"), unless required to avoid obstructions.

7.19 WATER MAIN BLOW-OFF

Dead end water mains shall have a domestic service tap, a fire hydrant service connection, or a blow-off (hydrant) (Detail 740) within two feet (2') of the end of the line.

7.20 WATER MAIN THRUST RESTRAINT

Pipeline thrust restraint shall be incorporated in all designs to resist the thrust forces which are generated at changes of direction. Thrust restraint may include concrete thrust block, locking gasket, or restrained mechanical joint.

Concrete thrust block force bearing areas shall be designed to meet thrust restraint forces for given thrust conditions as presented in Standard Details 0750 to 755, inclusive. Concrete thrust blocks shall be designed to meet in situ soil conditions assuming soil moisture conditions are at "field capacity" or fully saturated. Design plans shall include

concrete thrust block design calculations and supporting data for situations that do not meet the conditions of the standard details

Mechanical thrust restraint may be used in-lieu of thrust block restraint. For approved methods and types of mechanical thrust restraints see Section 12, Water Distribution System, Construction Specifications .

Restrained pipe length shall be computed using the following minimum parameters: soil type, trench type, fitting type, fitting angle, nominal size of pipe, pipe material, test pressure, factor of safety, and depth of bury. Installation of mechanical thrust restraint shall follow manufacturers' specifications.

Restrained length of pipe shall meet or exceed the specifications of the table shown in FIGURE 7A.

7.21 DISTRIBUTION SYSTEM WATER SAMPLING STATION

Sampling stations shall be installed throughout the water distribution system at locations as required by these specifications and the City Engineer. The number of stations to be installed and the location of installation depend on the proximity of other sampling stations. Sampling stations shall be added to the water system to ensure that water is sampled throughout the distribution system including all pressure zones. As a minimum, a primary sampling station shall be added for every new 1,000 service connections, or for every 2,000 persons, or in isolated areas. Sampling stations should be placed at least 4 feet from the roadway or sidewalk and be easily accessible.

Sampling stations shall be installed in the P.U.E., public Right of Way or City owned property per Detail 0745.

7.22 GROUNDWATER SOURCE PROTECTION

A "Phase 1", ASTM E1527-05 environmental assessment addressing groundwater risk shall be prepared and submitted as part of design of commercial and industrial area facilities. The assessment shall as a minimum include:

A. An inventory of chemical use including storage quantities and an assessment of their hazard with regard to contaminating the City groundwater supply in the event of a chemical spill, and

B. On-site management plans and facility designs intended to prevent or mitigate groundwater pollution from chemical spills.

7.23 WATER CONSERVATION

Design of the onsite water systems shall include estimates of water consumption for irrigation, indoor or potable uses, and fire flow. Estimates shall be included on plan sheets

or submitted separately. Water demand estimates shall be used by the City in its assessment of the water distribution system's capacity to meet projected demands. Water use estimates shall be developed with consideration given to water conservation practices and the use of lower water use plumbing fixtures, equipment, and appliances. Design efforts shall be made to promote landscape irrigation to occur at times of the day of lower evaporation losses, especially night and early morning.

7.24 WATER WELL ABANDONEMENT AND DESTRUCTION

Abandon and destroy private water wells in accordance with the provisions of State Health Department and County Public Health Department Standards. The well owner shall also provide a well destruction plan prepared by a registered engineer or certified hydrogeologist. The primary purpose of the plan shall be to prevent groundwater movement, utilizing the existing well structure, between the various underground aquifers as well as prevent the direct movement of surface water (via the well structure) into the underlying aquifers. The well destruction plan will be reviewed and approved by the City Engineer prior to commencement of any such work.

The well destruction plan content shall include:

1. Copy of original "Water Well Driller's Report" (State DWR).
2. Conduct a down-hole closed circuit television (CCTV) inspection of the well and provide a copy of the recording; include written report of findings.
3. Recommended well destruction activities based on the following minimum steps:
    a. Remove scaling and other encrustations that are blocking well screens. Purpose is to maximize movement of cement grout through screens into gravel pack.
    b. Remove any accumulated fill material at bottom of well down to original completed depth.
    c. Mechanically perforate the blank (unscreened) portions of the well casing. Portions within any concrete seal near the ground surface do not need to be perforated.
    d. Prepare a CCTV inspection and recording of the well after the above activities.
    e. Remove the existing well top block and casing to a depth of 5 feet below ground surface.
    f. Fill the well via a tremie pipe with a combination of neat cement and/or cement grout to 2 feet above the top of the exposed casing. The viscosity of the neat cement and/or cement grout shall be low enough to allow for movement through the screens into the gravel pack.
    g. Backfill and compact the well head excavation and perform other cleanup activities.
    h. Prepare and file a State DWR Water Well Driller's Report upon completion of well destruction and abandonment activities. Provide a copy to the City.
4. The above steps shall be adjusted or additional steps added as required to achieve the primary purpose of eliminating or minimizing inter-aquifer movement of groundwater and surface water intrusions into the subsurface strata via the existing water well structure.

7.25 FIGURE 7A - REQUIRED RESTRAINED LENGTH, FEET - FOR DUCTILE IRON PIPE ONLY

DIAMETER (FITTINGS, VALVES, PIPE, ETC.)		4"	6"	8"	10"	12"	14"
Fittings	90°	16'	22'	29'	34'	40'	45'
	45°	6'	9'	12'	14'	17'	19'
	22 1/2°	3'	4'	6'	7'	8'	9'
	11 1/4°	2'	2'	3'	3'	4'	4'
Tee-branch, size	4"	28'	28'	28'	28'	28'	28'
	6"	---	39'	39'	39'	39'	39'
	8"	---	---	51'	51'	51'	51'
	10"	---	---	---	61'	61'	61'
	12"	---	---	---	---	72'	72'
Dead-Ends (& in-line valves)		28'	39'	51'	61'	72'	83'
Reducer	4"	---	20'	37'	50'	63'	74'
	6"		---	21'	38'	53'	66'
	8"			---	21'	38'	54'
	10"				---	36'	51'
	12"					---	21'
Vertical offset 45°	upper bend	11'	16'	21'	25'	30'	34'
	lower bend	4'	5'	7'	9'	9'	12'
22 1/2°	upper bend	5'	8'	10'	12'	14'	16'
	lower bend	2'	3'	3'	5'	4'	6'
11 1/4°	upper bend	3'	4'	5'	6'	7'	8'
	lower bend	1'	1'	2'	2'	2'	3'

NOTES: *Restrained lengths calculated for pipe placement conditions as follows:*

1) *Soil type is poorly graded sands, and gravely sands,*
2) *Type 3 trench,*
3) *150 psig line test pressure,*
4) *Factor of safety of 2:1,*
5) *Minimum pipe bury depth of 3 1/2 feet,*
6) *Pipe is ductile iron, without poly-wrap (Polyethylene encased sections of a line will require additional joint restraint since the friction between the pipe and the soil is reduced with the use of polyethylene encasement),*
7) *Vertical offset lower bend assumed depth of bury of 6 feet minimum - if less than 6 feet, use restraint length for upper bend. 90° bends should not be used in vertical offsets. Due to the possibility of severe stresses imposed on the fittings bend angles should be limited to 45°,*
8) *EBAA iron computer program was used to calculate thrust restraint lengths.*

7.26 FIGURE 7B - REQUIRED RESTRAINED LENGTH, FEET - FOR POLYVINYL CHLORIDE PIPE (PVC) ONLY

DIAMETER (FITTINGS, VALVES, PIPE, ETC.)		4"	6"	8"	10"	12"	14"
Fittings	90°	18'	25'	32'	38'	45'	51'
	45°	8'	10'	14'	16'	19'	21'
	22 1/2°	4'	5'	7'	8'	9'	11'
	11 1/4°	2'	3'	4'	4'	5'	5'
Tee-branch, size	4"	37'	36'	34'	33'	31'	29'
	6"	---	52'	51'	49'	47'	45'
	8"	---	---	69'	67'	65'	62'
	10"	---	---	---	83'	80'	78'
	12"	---	---	---	---	97'	95'
Dead-Ends (& in-line valves)		38'	54'	71'	85'	101'	115'
Reducer	4"	---	28'	51'	69'	87'	104'
	6"		---	30'	52'	73'	92'
	8"			---	29'	54'	75'
	10"				---	30'	55'
	12"					---	30'
Vertical offset 45°	upper bend	16'	23'	30'	36'	42'	48'
	lower bend	5'	7'	9'	11'	13'	15'
22 1/2°	upper bend	8'	11'	14'	17'	20'	23'
	lower bend	3'	4'	5'	6'	7'	7'
11 1/4°	upper bend	4'	6'	7'	9'	10'	12'
	lower bend	2'	2'	3'	3'	4'	4'

NOTES: *Restrained lengths calculated for pipe placement conditions as follows:*

1) *Soil type is poorly graded sands, and gravely sands,*
2) *Type 3 trench,*
3) *150 psig line test pressure,*
4) *Factor of safety of 2:1,*
5) *Minimum pipe bury depth of 3 1/2 feet,*
6) *Pipe is polyvinyl chloride pipe,*
7) *Vertical offset lower bend assumed depth of bury of 6 feet minimum - if less than 6 feet, use restraint length for upper bend. 90° bends should not be used in vertical offsets. Due to the possibility of severe stresses imposed on the fittings bend angles should be limited to 45°,*
8) *EBAA iron computer program was used to calculate thrust restraint lengths.*

SECTION 8: GRAYWATER DISTRIBUTION SYSTEM DESIGN

8.01 GENERAL

State of California standards have been developed and adopted to guide the use of graywater. Graywater is untreated household wastewater which has not come in contact with toilet waste. California's graywater standards are now part of the State Plumbing Code, making it legal to use graywater everywhere in California. Standards outlining minimum system design and operation parameters are included in Title 24, Part 5, of the California Administrative Code, GRAYWATER SYSTEMS FOR SINGLE FAMILY DWELLINGS, commonly called the California Graywater Standards.

8.02 SAFETY

Graywater systems shall have no connection to any potable water system and shall not result in any surfacing of the graywater. Siting of graywater system components has been determined by California Graywater Standards, and by the local Administrative Authority (City and County) as follows:

MINIMUM HORIZONTAL DISTANCE FROM	SURGE TANK (FEET)	IRRIGATION FIELD (FEET)
Water supply wells	100	200
Public water supply pipeline	10	10
On-site domestic water service line	5	5
Water ditches	50	50

The California Graywater Standards also defines additional safety requirements and include minimum irrigated square footages for systems based on standards for graywater daily household production. All standards shall be complied with.

8.03 CROSS-CONNECTION PREVENTION

Graywater water distribution systems shall have no connection to any potable water system. Backflow prevention assemblies shall be required and installed at all water service connections serving a site that uses graywater of any source.

{Blank Page}

SECTION 9: STREET LIGHTING SYSTEM DESIGN

9.01 GENERAL

Street lighting improvements shall be designed to serve the ultimate level of development as defined in the City General Plan. This section describes typical design practices for new or modified street lighting systems within the City of Woodland.

9.02 STREET LIGHTING DESIGN STANDARDS

Street lighting shall be designed and drafted in conformance with these specifications, the current editions of Caltrans Standard Specifications, Caltrans Standard Plans, and the California Electrical Code.

9.03 STREET LIGHTS REQUIRED

Street lights shall be required, in accordance with the spacing requirements of section 9.08, for all lots and parcels being developed or constructed upon except for projects that are constructing a single residence. In addition, street lights may be required for lots and parcels containing existing structures which are being improved or altered, depending on the nature and extent of the work. Illustrations of street lights generally required are shown in the 0900 series of the Standard Details.

Data and calculations supporting the satisfaction of these requirements shall be submitted for review, or the predetermined design standards in Section 9.08 shall be used for lighting layout. An illumination analysis may be required for special or unique situations and shall be provided for those situations when requested by the City Engineer.

9.04 ILLUMINATION REQUIREMENT

The following average lighting values are required for the listed type of street:

Street Type	Average Illumination (foot-candles)	Uniformity Ratio Average: Minimum	Minimum HPS Light Size (Post Top)	Minimum LED Light Size (Cobra)
Local or Residential	0.19 fc	10:1	70 watt	37W-20 LED[1]
Collector	0.20 fc	10:1	100 watt	55W-30 LED
Arterial	0.46 fc	8:1	200 watt	95W-50 LED
Industrial	0.19 fc	10:1	70 watt	37W-20 LED
Landscaped Pedestrian Areas	0.19 fc	10:1	70 watt	37W-20 LED
Crosswalks, Signalized Intersection	0.15 fc (minimum)	Based on Street Type	Based on Street Type; 150 or 200 watt	Based on Street Type; 95W-50 or 139W-80 LED[2]

Street Type	Average Illumination (foot-candles)	Uniformity Ratio Average: Minimum	Minimum HPS Light Size (Post Top)	Minimum LED Light Size (Cobra)
Middle of Signalized Intersection	0.60 fc (minimum)	Based on Street Type	Based on Street Type; 150 or 200 watt	Based on Street Type; 95W-50 or 139W-80 LED[2]

Notes:

1. 37W-20 LED denotes 37 watts (total) with 20 LED individual lights per head.
2. Perform intersection lighting analysis to confirm compliance with lighting standards. Use indicated light as needed.

9.05 DEVELOPER'S RESPONSIBILITY

Existing street lights which must be relocated or repositioned as a result of the construction of new streets or driveways into a development shall be the responsibility of the developer.

9.06 PLAN REQUIREMENTS

Final Improvement Plans shall be prepared following formal City approval of a utility site plan showing existing and proposed street light locations. These plans shall show the following:

A. Scale: A scale of 1" = 100' horizontal is the minimum scale for street lighting plan sheets. Street lighting design details may be combined with the striping plans in the plan set.

B. Existing Topography: Existing topography shall include existing service points, existing City owned electrical facilities, such as traffic signals, irrigation controllers, and street lighting in the immediate vicinity of the project, and conduit runs.

C. Proposed Improvements: Proposed street light types, locations, conduit sizes and locations, service locations, pull boxes, mast arm lengths, and light pattern to be installed shall be detailed on the plans.

D. Right-of-Way: All right-of-way lines, easements, section lines, and temporary construction easements, both existing and proposed, shall be properly dimensioned. Any public utility easements shall be noted.

E. Subdivision and Lot Details: Subdivision plans shall show lot numbers and frontage measurements, intersection property lines of adjacent properties, and names and plan numbers of adjacent subdivisions. Service details shall be shown as applicable.

F. Luminaire Schedules: Luminaire schedules shall be shown in tabular form and shall indicate, but not be limited to, the amount and type of luminaires on each

new or existing service, the service location and voltage, the number of lights removed or added from an existing service, and any other pertinent information affecting the service load.

9.07 STREET LIGHT LOCATIONS

Street lights shall be located on property lines whenever possible, at least five feet (5') from driveways or any above ground facility, and at such locations to maximize their separation from trees. Street lights shall normally be staggered on opposite sides of the street and on outer edge of curves. See Figures 9A, 9B, and 9C for additional information.

In cases with separated sidewalk the street light standard (foundation) shall be placed in the landscape strip adjacent to the front of sidewalk, except for the Spring Lake Specific Plan area. When the landscape strip is greater than six feet the luminaire arm shall be increased to eight feet in length.

9.08 STREET LIGHT TYPE AND SPACING

Street lights shall be spaced and placed as indicated in the following tables. Refer to Figures 9A, 9B and 9C for light location requirements at intersections.

STANDARD STREET LIGHTS (POLE & MAST ARM, "COBRA" LIGHT)					
TYPE	STREET TYPE	FC TO FC WIDTH	MOUNTING HEIGHT	WATTS-# LEDS	MAXIMUM SPACING "L"
A	Residential	35'	25'	37W-20 LED[1]	190'
A	Residential	40'	25'	37W-20 LED	180'
B	Collector	40'	28'	55W-30 LED	235'
C	Arterial	72'	31'	95W-50 LED	210'[2]
C	Arterial (without median)	96'	31'	95W-50 LED	165'[2]
C	Arterial (with median)	96'	31'	95W-50 LED	210'[2]
D	Industrial	40'	30'	37W-20 LED	155'
E	Signalized Intersections	Based on Street Type		139W-80 LED	On Signal Poles and as required by lighting analysis

1. 37W-20 LED denotes 37 watts (total power) with 20 LED individual lights per head
2. 2 lights at indicated spacing per Fig. 9A.

SPRING LAKE SPECIFIC PLAN AREA STREET LIGHTS (HISTORIC POST TOP MOUNTED LIGHT)						
STREET TYPE	MEDIAN	FC TO FC WIDTH	POLE HEIGHT / MAXIMUM HEIGHT	HPS/ WATTS	LIGHT LOCATION	MAXIMUM SPACING "L"
Residential	N	35'	10' / 14'	70	Side	100' S
Collector	N	40'	15' / 20'	100	Side	100' S
Collector	14'	54'	15' / 20'	100	Median	190' D
Collector "A"	N	40'	15' / 20'	100	Side	100' S
Collector with Greenbelt	N	40'	15' / 20'	100	Side	400' D GB 200' S opp.
Farmer's Central Road with Channel	N	42'	15' / 20'	100	Side	400' D Ch 200' S opp.
Arterial 2-Lane	14'	50'	25' / 30'	200	Median	230' D
Arterial 4-Lane	14'	74'	25' / 30'	200	Median	180' D
County Rd. 102 Interim (4-lane future)	N	25' CL to EP (s/b)	25' / 30'	200	Side	220' D @ future FC 14'± to EP
County Rd. 25A	N	40'	15' / 20'	200	Side	155' S
East Street, n/o 24A	Y	30' (n/b)	15' / 20'	200	Side	175' S
East Street, 24A to Parkway	Y	20' (n/b)	15' / 20'	200	Side	220' S
Bike Path or Pedestrian Way	N	n/a	10' / 14'	70	Side	200' S

NOTES:

1. Lighting requirements based on Figures 1-19, SLSP Lighting Analysis, April 16, 2004.
2. S (Single) denotes 1 light per pole, staggered side to side, as appropriate.
3. D (Dual) denotes 2 lights per pole.
4. Lights shall be placed in medians (when available) on Arterials and Collectors.
5. Abbreviations: n/b denotes north bound, s/b denotes south bound, n/o denotes north of, opp. denotes opposite side of street, FC denotes face of curb, EP denotes edge of pavement, CL denotes centerline of street and GB denotes greenbelt or landscaped area adjacent to street

9.09 STREET LIGHT POLES

All pole construction and materials shall conform to the standards outline in the Standard Specifications and as shown in 0900 series of the Standard Details. All poles shall meet 80 m.p.h. wind load design.

The City Engineer may approve special or unusual designs if the character of the surrounding neighborhood warrants unusual design. Where special or unusual design street light poles are to be used, the developer shall supply to the City additional poles to be used for future pole replacement. The minimum number of replacement poles to be

supplied to the City shall be ten percent (10%) of the poles being installed with any fractional percent being rounded up to the next whole number.

9.10 MAST ARM LENGTH

For Type B or C street lights that are located seven feet (7') or less from the face of curb (as measure from centerline of pole) a six foot (6') mast arm shall be specified. When these poles are greater than seven feet (7') from the face of the curb, an eight foot (8') mast arm shall be specified.

9.11 LUMINAIRES

The type of street light shall be specified on the plans. The luminaires for mast arm mounted lights (cobra) shall be light emitting diode (LED) type with internal driver mechanisms per Section 24, LED Street Lights, Construction Specifications. The luminaries for post top mounted light shall be high pressure sodium with internal regulator ballasts.

The City Engineer may approve special or unusual designs if the character of the surrounding neighborhood warrants unusual design. Exceptions to the Spring Lake Specific Plan standard requirements are not allowed in the Spring Lake Specific Plan area. Where special or unusual design street light luminaires are to be used, the developer shall supply to the City additional luminaires to be used for future luminaire replacement. The minimum number of replacement luminaires to be supplied to the City shall be ten percent (10%) of the poles being installed with any fractional percent being rounded up to the next whole number.

9.12 SERVICE CONNECTION

A 120-volt underground circuit shall be employed on all systems. A maximum of seven (7) street lights shall be designed on any given circuit. Other voltage circuits will be considered upon separate application to the City Engineer for approval. Service points shall be provided within a utility easement immediately adjacent to or within the right-of-way and shall be open and easily accessible to the street frontage.

Service Pedestal shall conform to Caltrans Standard Type III AF, 120/240 volt PG&E service. Street lights shall be powered from the un-metered side. (Anodized Aluminum Cabinet).

9.13 PULL BOXES

All pull boxes, including the size, shall be shown and identified on the plans. Pull boxes shall be located where two or more conduits intersect, at critical angle points, street crossings, and where conduit runs are more than 175 feet long. Pull boxes shall also be located adjacent to the bases of all street light poles and parking lot light poles. A ground rod shall be installed in all street lighting and parking lot lighting pull boxes adjacent to

poles. Pull boxes shall be of the size and type required in Section 13.07, Construction Specifications.

9.14 CONDUCTORS

All conductors, including quantity and size, shall be identified on the plans. Unless otherwise specified, conductors shall be single conductor with THW insulation, solid or stranded copper, sized and color coded in accordance with these standards and the National Electric Code. The same color of wire must be used for the whole length of the circuit. Tape shall not be used to identify the color of the wire.

The minimum conductor shall be No. 4 A.W.G. on a direct underground service.

The minimum conductor size from the service point to the service can shall be No. 4 A.W.G. The size of each conductor from the service point to the luminaires shall be such that the voltage drop along each circuit will not exceed five percent (5%) of the nominal service voltage to be used which is 120 volts. Calculations shall be made substantiating the design criteria for every circuit. Calculations shall also be made showing the total load in amperes of each circuit at the service can.

The minimum size for street lighting conductors shall be No. 10 A.W.G. except that No. 12 A.W.G. may be used from the luminaire to the adjacent pull box.

A photo cell is required in each service system; it shall be connected to the service can with three No. 14 A.W.G.

A. All traffic signal loop wire splices to the home run must be hot dipped in solder, then three (3) layers of electrical rubber tape applied. Two layers of PVC tape must be applied over the rubber tape. The whole splice must them be covered with **Liquid Tape or approved equivalent**.

B. All other splices in pull boxes must be wire nutted, then three layers of PVC tape applied over the wire nut extending to a length of a minimum of two inches (2") over the wire. Then the whole splice must be dipped or covered with **Liquid Tape or approved equivalent**.

C. Exceptions shall be made for street lighting splices in pull boxes. If conductors cannot be spliced with wire nut because of the size of the conductors, then multi tap, plastic encased, weather rated lug shall be used. The commonly used name for these connectors is a Polaris connector or an approved equal can be used. The same tape and **Liquid Tape** procedure used for wire nut connections shall be performed when using this exception.

9.15 PHOTO CELL

A single twist-lock receptacle photo cell shall be provided on the luminaire nearest to the service point for each service.

9.16 CONDUITS

Conduits shall be sized in accordance with the California Electrical Code with a minimum size of 1½" in diameter. Larger size conduits may be required at the City's discretion.

9.17 RIGHT-OF-WAY AND EASEMENTS

Street lighting improvements shall be placed within public easement dedications or rights-of-way. The easements or rights-of-way should be sufficient in width to provide access for operations and maintenance.

9.18 ELECTRICAL EQUIPMENT AND WORK

Control and switching equipment and fusing of all circuits shall meet the requirements of Caltrans Standard Specifications, Caltrans Standard Plans, and California Electrical Code.

9.19 MASTER PLANNING

Master planning is the determination of street light locations between control points. Control points are proposed street light locations at street intersections. The purpose for master planning is to end up with an overall uniform street light system meeting minimum requirements. On collector and arterial streets, master planning shall apply to both sides of the street. The procedure for master planning is outlined as follows:

A. Determine the nearest intersections each way from the street light locations required. Determine the location of the street lights at the intersections in conformance with these design standards.

B. Determine the existence of any City owned and maintained street lights situated between the adjacent intersections above.

C. Determine the distance between the adjacent designed intersection street lights above and/or adjacent existing street lights, whichever are nearest to the street light locations being determined.

D. Divide the distance into the most possible equal spaces between lights that can be obtained in conformance with the spacing requirements herein.

E. Compare the light locations to intersecting property line, driveways, pedestrian lanes and utility obstructions as follows:

1. If the locations fall close to a property line and the street light location can be adjusted to the property line while staying within the maximum spacing allowed, then the adjustment should be made.

2. Generally, street lights should be situated at intersecting property lines for residential lots with minimal frontage (75 feet or less). The light spacing may have to be unbalanced with additional lights being added to attain this and still comply with the maximum spacing allowed.

3. Street light locations shall be adjusted to miss driveways and existing utility obstructions by five feet (5').

9.20 FIGURE 9A – ARTERIAL STREETS

STREET LIGHT LOCATIONS
ON ARTERIAL STREETS

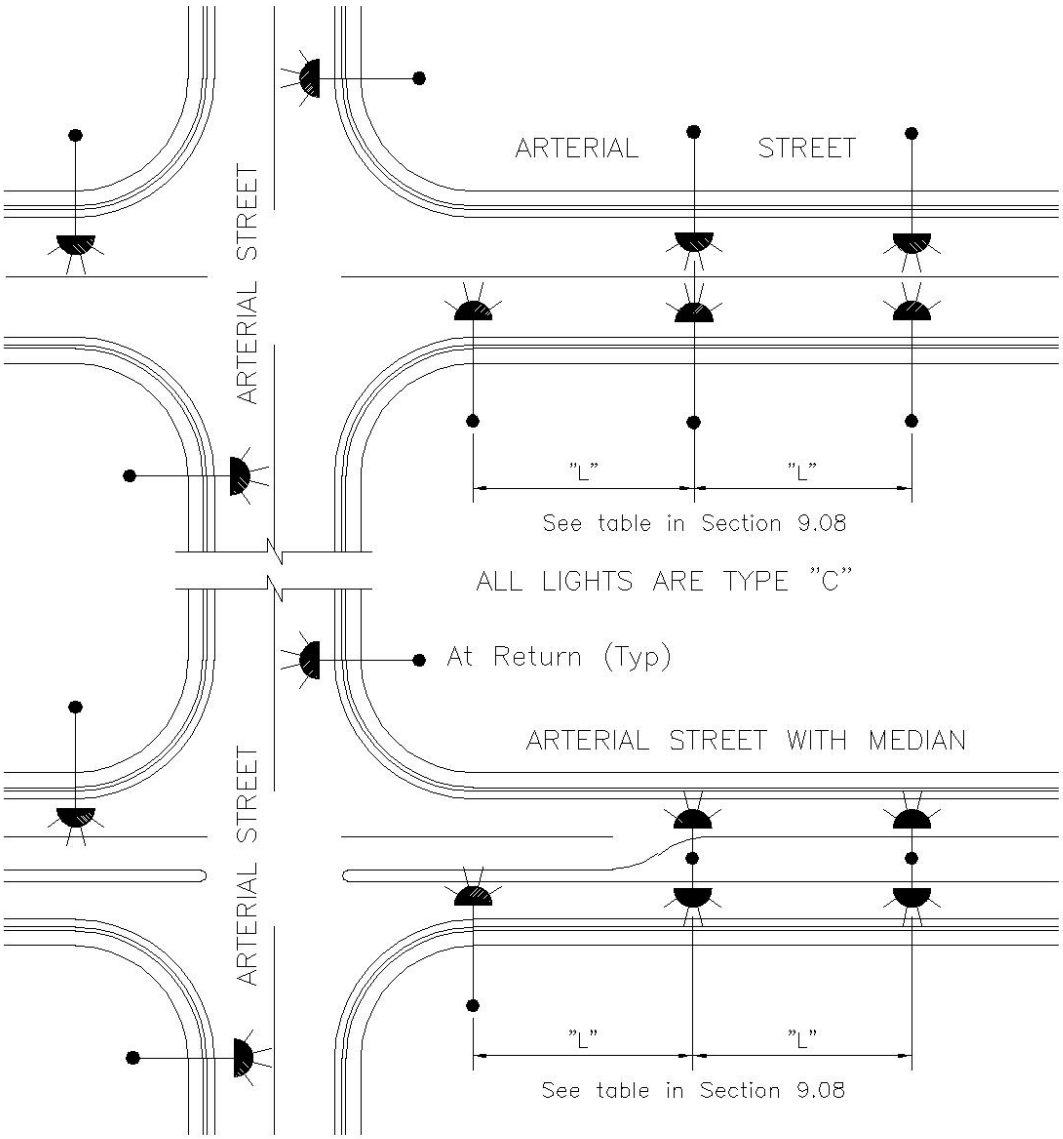

Note: Locate Street Lights on Traffic Signal Poles at Signalized Intersections.

Figure 9a

9.21 FIGURE 9B – COLLECTOR STREETS

STREET LIGHT LOCATIONS
ON COLLECTOR STREETS

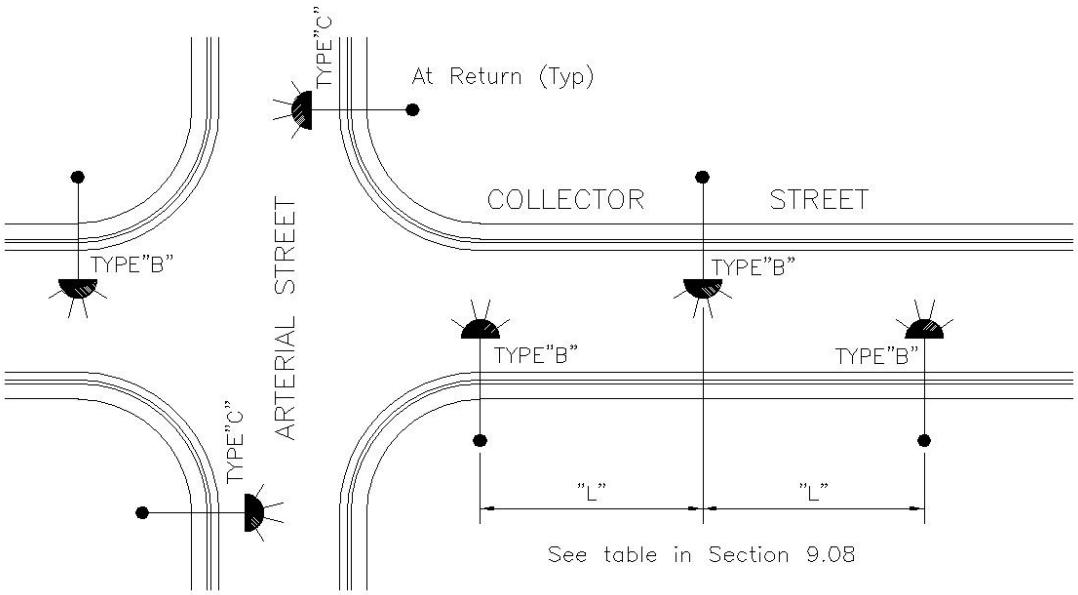

Note: Locate Street Lights on Traffic Signal Poles at Signalized Intersections.

Figure 9b

9.22 FIGURE 9C – LOCAL (RESIDENTIAL) OR INDUSTRIAL STREETS

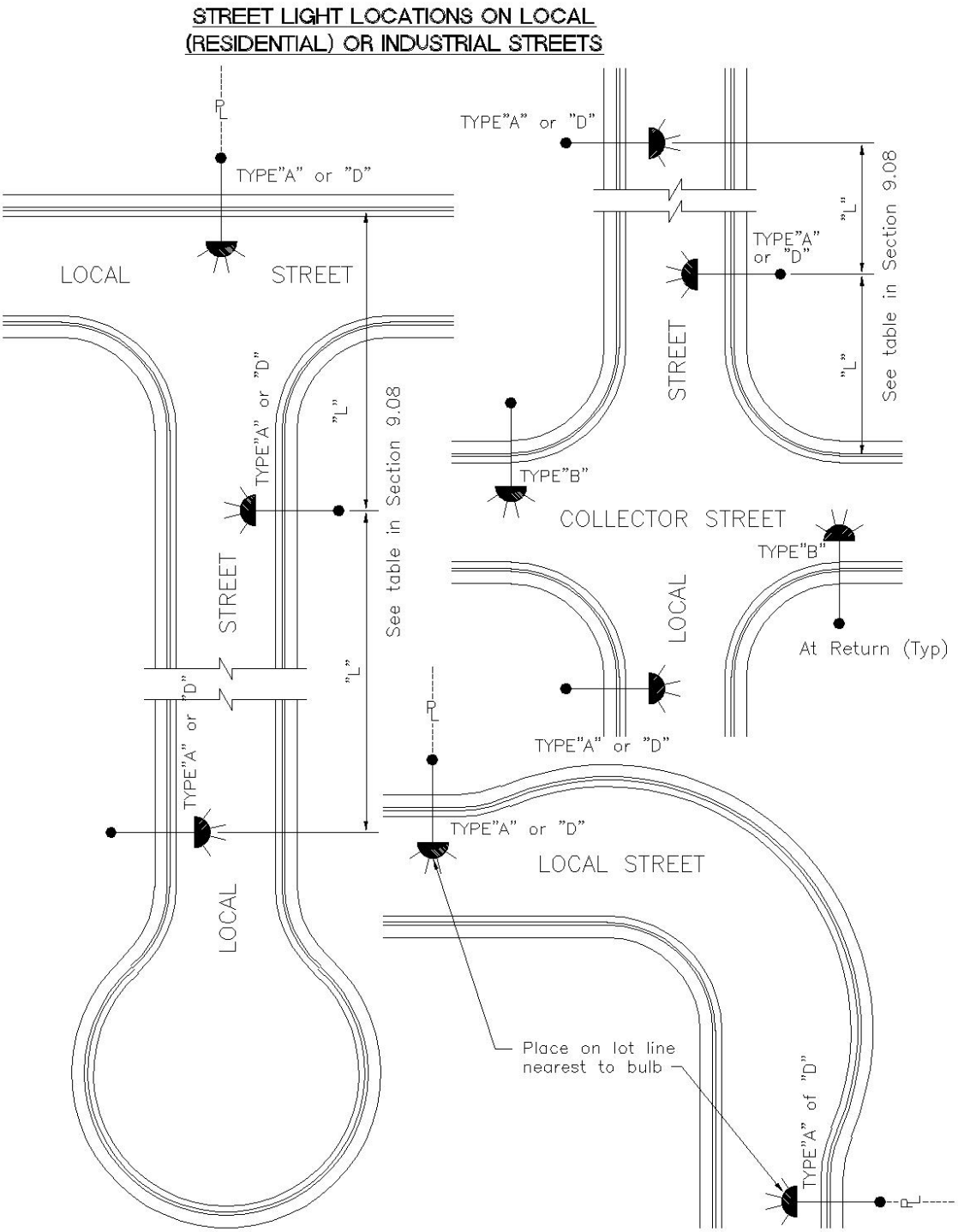

9.23 FIGURE 9D – SPRINGLAKE AREA

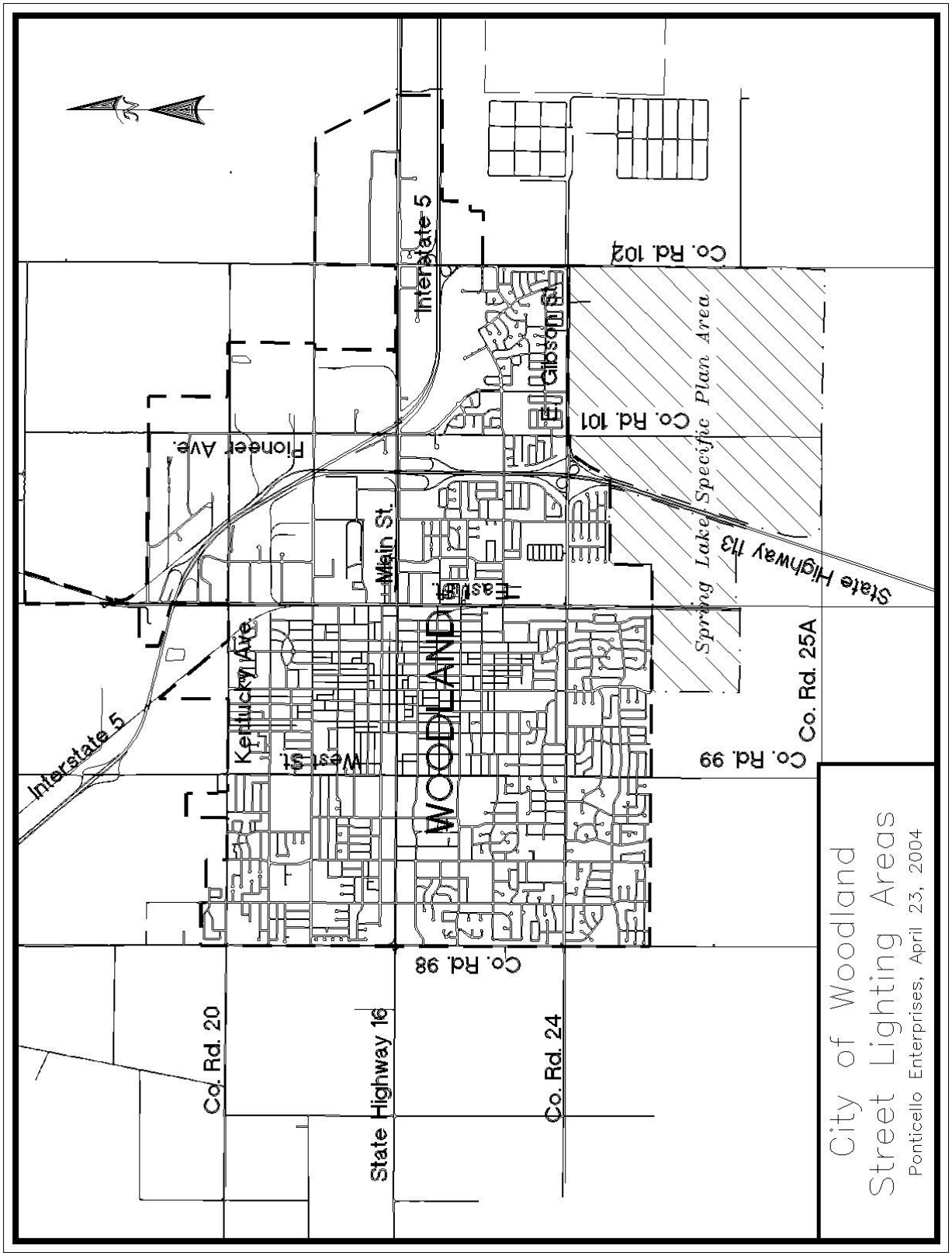

SECTION 10: TRAFFIC SIGNALS

10.01 GENERAL

The need for new traffic signals shall be based on the Street Master Plan or warrants contained in the latest edition of the California MUTCD.

Traffic signals shall be designed in accordance with these Standard Specifications and the latest editions of the following:

- **Caltrans** Standard Specifications and **Caltrans** Standard Plans, including all standard symbols contained therein.
- California Manual on Uniform Traffic Control Devices.
- Section 9.04 for luminaire illumination requirements.
- **Caltrans** Traffic Manual, Chapter 9. Tables 9-8 and 9-9 for conduit sizing. The 26% fill limit shall apply for new facilities, 40% for reconstruction.

10.02 SIGNAL STANDARD TYPES

Traffic signal standards, posts, and mast arms shall be of the types listed in the most recent edition of the state standard plans and shall meet 100 m.p.h. wind load design.

The typical luminaire arm length used shall be 15 feet.

10.03 VEHICLE AND PEDESTRIAN SIGNAL TYPES

All vehicle signals and pedestrian signals shall have terminal block components and be of the types listed in the latest edition of the state standard plans.

All mast arm mounted vehicle signals shall be 12" in diameter and MAS mounted.

Protected left turn signals shall be all arrows.

All vehicle visors are to be half tunnel type.

All vehicle and pedestrian signals must be the LED type.

All back plates for vehicle signals are to be louvered back plates.

Programmed visibility vehicle signals shall not be used without prior approval of City engineering staff.

Pedestrian signal heads shall be countdown type, Model number 430-6479-001X, by Dialight Corporation or approved equal.

10.04 VEHICLE SIGNAL ALIGNMENT

Typical vehicle signal alignments are listed below. Case-by-case variations may occur.

A. For single left turn lanes with protected left turn movement, the left turn signal shall line up with the center of the left turn lane as close as possible.

B. For dual left turn lanes (which shall have a protected movement), the left turn signal shall line up with the extension of the line between the two left turn lanes as close as possible.

C. When a protected left turn signal is used, the signal for the through movement shall line up with the center of the lane group as close as possible, regardless of the number of through lanes. When 50' or 55' mast arms are used, only one MAS signal shall be used for the through movement instead of two signals as shown in the **Caltrans** Standard Plans (unless there are four through and right turn only lanes).

D. For one through lane with permissive left turn, the MAS signal shall line up with the center of the left half upon approach of the through lane, as close as possible.

E. For two through lanes with permissive left turn, the MAS signal shall line up with the center of the #1 through lane (i.e., the lane adjacent to the left turn lane), as close as possible.

F. When a 4 section MAS signal is used, it shall line up with the center of the left half (upon approach) of the #1 through lane, as close as possible.

10.05 NUMBER AND SIZE OF VEHICLE SIGNAL INDICATIONS

Typical indications are as follows:

A. For Protected Left Turn Movements: One 3-section all arrow MAS and one 3-section all arrow far left side pole-mounted signal.

B. For Intersections With a Left Turn Pocket (For Permissive Left Turn Movements): There shall be an additional far (left) side 3-section pole mounted head. Signal head shall be all circular indications.

C. For Through Movements (With Protected Left Turns): One 3-section MAS, one 3-section far right side pole-mounted signal, and one 3-section near right side pole-mounted signal. (Near side signals may not be required if the intersection is less than 100' wide, approach speeds are 30 mph or less, and it is not needed to meet continuous sight distance requirements).

D. For Through Movements (With Permissive Left Turns): One 3-section MAS, one 3-section far left side pole-mounted signal, one 3-section far right side pole-mounted

signal, and one 3-section near right side pole-mounted signal. (Near side signals may not be required if the intersection is less than 100' wide, approach speeds are 30 mph or less, and it is not needed to meet continuous sight distance requirements.) If left turns are not permitted the far side left pole mounted signal head is not required.

E. For Split Phased Situations: One 4-section MAS (w/GA), one 4-section far left side pole-mounted signal (w/GA), one 3-section far right side pole-mounted signal, and one 3-section near right side pole-mounted signal.

F. For Right Turn Arrow Overlap Situations: Same as above except the far right side and near right side pole-mounted signals shall be 5-section with green and yellow arrows. Overlaps required prohibited U-turn on associated protected left movements. Right turn arrow overlaps shall not be provided without prior approval of the City Engineer.

G. For Size of Vehicle Indication: As a general guideline, size of vehicle indication shall be in accordance with the California MUTCD, but an individual indication's size may be adjusted by the City Engineer.

10.06 VEHICLE DETECTOR LAYOUT AND INPUTS

Typical vehicle detector layout and inputs shall be as follows:

A. Left turn lanes shall have:
   a. One 50' type C "quadrapole" loop.
      i. The loop shall be placed two feet (2') past the stop bar, as measured from the leading edge of the limit line.

B. Through lanes shall have:
   a. One type C "quadrapole" loop at the stop bar.
      i. The loop shall be placed two feet (2') past the stop bar, as measured from the leading edge of the limit line.
      ii. The length of the loop shall be determined by the City Engineer.

   b. One mid and one rear microloop detector.
      i. Detectors shall include microloop traffic monitoring card and detector lead-in cable. Systems shall be Global Traffic Technologies Canoga Non-Invasive microloop vehicle detection system model 702 with 900 Series Monitoring Card with model 30003 home-run lead-in cable or approved equal system.
      ii. Installer will contract with Global Traffic Technologies or authorized dealer for proper installation, turn-on support and verification.

C. Right turn only lanes shall have a type C "quadrapole" loop:
   a. One 20' type C "quadrapole" loop.

i. The loop shall be placed two feet (2') past the stop bar, as measured from the leading edge of the limit line.

Rear loops shall have separate inputs, mid loops may have combined inputs if necessary. Additional downstream count loops may be required by the City.

All inductive front and left turn loops should not be connected to an input card that has a micro loop on the same card. Input card layout should accommodate separation of inductive and micro loops so that they do not share the same card."

Detector handholes shall be provided. Handholes shall be placed so they line up with roadway stripes. All handholes shall be type B.

On approaches with an approach speed of 30 m.p.h. or less video detection may be allowed on a temporary basis at the discretion of the City Engineer.

Type C "quadrapole" loops may be substituted where microloop installation isn't feasible, with City Engineer approval.

10.07 CONDUIT

Conduit requirements shall conform to the following (unless restricted by push button post size):

A. Service run conduit shall be 2 ½- inch minimum diameter.

B. Conduit from the main pull box to the controller shall be two (2) 3-inch diameter conduits minimum.

C. Any signal run and interconnect conduit shall be 2-inch minimum diameter.

D. All street crossing conduit runs shall be a minimum of 3-inches.

E. A minimum of 4 conduits shall be installed on arterial roadways to provide signal interconnectivity and to support other communications requirements.

10.08 CONDUCTORS

All conductor runs for each signal phase to each terminal block on a pole shall be direct from the controller home run pull box. The conductor schedule shall not allow for splicing at intermediate pull box location.

10.09 PULL BOXES

Refer to Caltrans Standard Plans No. ES-8.

A. The minimum size for pull boxes shall be #5. However, #6 pull boxes shall be used at the ends of street crossings and when four or more conduits enter the box. Covers shall be concrete and marked "Traffic Signal".

B. Larger pull boxes shall be required as follows:

CONDITION	SIZE
Any pull box with 12 or more cross sectional inches of conduit entering	a pull box extension or 20" x 42" dual lid pull box may be required.
Home run pull box for a 2, 3, or 5, phase signal	20" x 42" dual lid pull box shall be required.
Home run pull box for a 8 phase signal	30" x 48" dual lid pull box shall be required.

C. Traffic signal interconnect conduit shall be installed in separate concrete pull boxes and their covers shall be marked "I.C." or interconnect.

D. Pull boxes subjected to vehicular travel shall be installed with one quarter inch steel plate covers (galvanized after fabrication) with a diamond-type surface in accordance with ES-8 of the **Caltrans** Standard Plans.

E. See Standard Detail 1015 for interconnect pull box distances.

10.10 CONTROLLER CABINETS LOCATION

Controller cabinets shall be approved by the City. Both controller cabinet and service pedestal should be located such that the conduit from the service point to the service pedestal does not require trenching across a street.

The entire intersection should be visible by the operator from the controller cabinet.

10.11 PROTECTED VS. PERMISSIVE LEFT TURN PHASING

Protected left turn phasing should be provided under the following conditions:

A. For an intersection with one through lane and a left turn pocket, a protected left turn phase may be required at the discretion of the City Engineer, if the product of the left turn volume and the opposing through volume exceeds 30,000 for any hour or if any of the guidelines for protected left turn phases are met (or are expected to be met as a result of a development project) as outlined in Section 9-01.3 of the **Caltrans** Traffic Manual (e.g. accidents, delay, volume, and misc.).

B. Where there are two or more opposing through lanes and the left turning vehicle occupies a dedicated left turn pocket, or where dual left turns are provided.

C. Where the travel distance through the intersection for left turn vehicles is more than 100 feet, and the 85th percentile speed of opposing traffic is 45 mph or more.

D. Where there are three or more opposing through lanes.

E. Where the left turn queue recurrently occupies the #1 through lane, and where dual left turn lanes cannot be provided, and where left turn lane can't be extended.

Protected/Permissive phasing, as discussed in Section 9-03.8 of the Traffic Manual, is typically not used in the City of Woodland. This type of operation, if proposed, would need prior approval of the City Engineer.

10.12 TRAFFIC SIGNAL INTERCONNECT

Traffic signal interconnect shall be provided for new signal installations, and for modification of existing signals which currently do not have interconnect. The interconnect cable shall be in its own conduit. The interconnect cable shall not be spliced anywhere other than in traffic signal cabinet.

The interconnect shall connect the subject signal with at least one existing traffic signal. If the subject signal is between two existing signals, the interconnect shall connect all three signals.

In cases where interconnect conduit is or will be provided, but for some reason interconnect cable is not being provided, the interconnect conduit shall be provided with a green #14 AWG pull wire.

See Standard Detail 1015 for interconnect pull box distances.

10.13 MAST ARM STREET NAME SIGNS

Mast arm street name signs shall be required for all approaches. These signs shall have a minimum lettering size of 8" U.C. and 6" L.C. with type D stroke width. Other lettering sizes shall not be used without prior approval by the City Engineer. The signs shall be double sided. The signs shall have a visual reflectivity equal to V.I.P. diamond grade.

10.14 EMERGENCY VEHICLE PREEMPTION (EVP)

All new traffic signals shall have (EVP) for all directions of approach on public streets. Each direction shall have a separate detector. Detectors shall be optical in nature and 3M Opticom equipment or approved equal.

10.15 SIGNAL PHASING

The phases following in the Standard NEMA order with Phase 2 shall be for eastbound traffic and phase 8 for northbound traffic.

10.16 ADVANCE FLASHING BEACONS

Advance flashing beacons shall be included at the discretion of the City Engineer. Typically they are located on roads with speed limits 45 m.p.h. or greater when there are no controlled intersections over the previous mile. All flashing beacon assemblies shall have two beacons flashing in alternating sequence.

10.17 MISCELLANEOUS APPURTENANCES

A. Bicycle push buttons shall be included for all approaches unless otherwise specified by the City Engineer.

B. Audible signal for the blind shall be required at new intersections and existing intersections that have been modified.

- Audible signal shall be Caltrans approved model DS100 Series by Novax Industries Corporation, or approved equal.
- Audible signal shall have Button Actuated Timer and initial timer setting shall be 3 seconds or as directed.

<u>Signal Hardware</u>

Enclosure Type:	Extruded, ruggedized
Number of Sounds:	Dual Sound
Sound Level Adjust:	Internal adjustment
Sound Inhibit Voltage:	24 VDC interface
Sound program:	Chirp/Cuckoo
Color:	Hunter Green

C. Walking man (international symbol) type plate shall be used for all pedestrian push buttons.

D. Additional pedestrian push buttons on medians of four or more lane roads may only be installed where the center median/pedestrian refuge area is a minimum of six feet in width.

E. Pedestrian activation shall be large button "ADA" type model Bulldog by Polara Engineering Inc. or approved equal.

F. Countdown pedestrian signal heads shall be used at new signals and for signal modifications, unless otherwise approved.

10.18 PREPARATION OF PLANS

Traffic signal plan sheets shall conform to these Standard Specifications, including submittal requirements, AutoCAD files, etc. Signal Plans can be part of a larger Improvement Plan set. Traffic signal plans shall have a title sheet followed by a signal and listing sheet for each intersection. Signing, striping, and interconnect information may be included on the signal and lighting sheet, or may be included on separate sheets, depending on ease or readability. The format, symbols, and content shall follow the recommendations as outlined in the California MUTCD and Standard Plans. Plans shall include:

A. Title Sheet: The title sheet shall include the following:

- Title of project, which shall include the location.
- A vicinity map (not required to be to scale) with north arrow.
- Pertinent signature blocks and revision block.
- A legend for symbols not found in the Standard plans (e.g., Utility lines, etc.).
- Below the legend, place the following note: NOTE: SEE CALTRANS STANDARD PLANS ES-1A AND ES-1B FOR EXPLANATION OF OTHER SYMBOLS.
- General Notes and Construction Notes.
- Name, addresses and phone numbers for the utility companies and City Services.

B. Signal and Lighting Sheet: The signal and lighting sheet shall be drawn at a scale of 1 inch equals 20 feet (1" = 20'), and shall include the following:

- A north arrow.
- The plan shall be orientated to show the major street to be laid out horizontally on the plan sheet, with the north arrow to be either pointed up or to the right. The phase diagram shall show phases per the California MUTCD with Phase 2 to be for eastbound traffic and the remainder of phases in regular NEMA order.
- Existing and proposed field conditions which include, but are not limited to, the following: underground and overhead utilities, driveways, fire hydrants, poles, signs, fences, street lights, edge of pavement, curb and gutter, sidewalk, right-of-way line, P.U.E.'s, roadway striping, medians, centerline, pull boxes, wheelchair ramps, trees (particularly those needing trimming), adjacent

topography, etc. Existing field conditions, appurtenances, etc., shall be dashed and screened. Proposed shall be solid and bold.

- Complete traffic signal design, including but not limited to, the following: conduit runs, detector loops with input designations, detector handholes, vehicle and pedestrian signals (with phase designation), luminaries, pedestrian push buttons (with phase designation), controller, service pedestal, service point, emergency vehicle detectors, signing, striping, interconnect, and location for phone line service.
- On a separate sheet the service equipment schedule and wiring diagram with legend, pole and equipment schedule, and conductor and conduit schedule. The schedule shall include rows showing percent fill values, and conduit quantity/size (per Standard Detail No. 1000).
- Phasing for emergency vehicle preemption (and railroad preemption where applicable). Protected left turn phases shall be combined with the concurrent through movement during EVP.
- Conduit shall not be shown to pass through detector loops.
- Right-of-way lines and easements to be shown on ALL plans.
- All submittals for review shall be two complete sets of plans and specifications, with comments from previous submittals.

C. Utility Relocation Plan (as required). Shall show all existing and proposed underground and overhead utilities.

D. Striping and Signing Plan (40, 50 or 100 scale): Shall include all existing signs, curb and pavement markings, and shall show disposition of each (removal, relocate or remain). Shall show all necessary parking removal signs and curb markings.

E. Signal Interconnect Plan (if necessary).

F. Civil Plan (20 or 40 scale): To include all paving, structural section, concrete, drainage, sanitary sewer, and earthwork items.

G. Signal Hardware.

Draft special provisions are to be provided to the City for review.

The City of Woodland uses the following:

Service pedestal:	Type III-AF; See Caltrans Standard Detail ES-2D
PG&E Service:	120/240 volt, single phase
Cabinet:	Type 332 Anodized aluminum, with 210 conflict monitor (monitor reds)
Controller:	Type 170E with 68HC11 CHIP with Comm port on front panel. The controller shall be upgraded from an existing

	Type 170 when the signal is modified as part of an improvement.
PROM board:	412-F System Memory module with 27C1001 EPROM and full complement of RAM
Software:	Bi-Tran Systems program # 233
Other components:	Detector units- Model 222 only
LED Signal Heads:	LED signal heads are required for all new red vehicular and pedestrian signal indications.

H. Battery Backup System: Shall meet the following requirements:

- The Battery Backup System shall be Tesco Traffic 27-22BBS by Tesco Controls, Inc. or approved equal.
- Pedestal shall be of anodized 1/8" aluminum.
- System shall include a Generator Transfer switch with BBS bypass and 30-amp external reverse service plug.

SECTION 11: GRADING AND EROSION CONTROL DESIGN

11.01 GENERAL

Grading improvements shall include excavation and embankment work for channels, pads and roadways, erosion control measures and retaining walls. All work shall be performed in accordance with the City of Woodland Grading Ordinance and Design Standards, latest edition of the Uniform Building Code, approved improvements plans, and the latest edition of the Caltrans Standard Specifications.

11.02 RESIDENTIAL LOT GRADING

A. Intent: Preclude steep slopes along the front, side and rear lot areas that would encourage erosion, make landscaping difficult, cause driveways to be unreasonably steep and threaten the stability of fences. The prohibiting of steep lot slopes will encourage the percolation of irrigation and rainfall and will reduce the amount of run-off water to be handled by the City drainage system. As such, The intent of the following specifications is to apply to the basic grading of lots before house construction and is not intended to restrict the homeowner in landscaping design options.

B. Grading Plan: A grading plan shall be included in the improvement plans for subdivisions. Guidelines for the preparation of the grading plan are as follows:

1. Grading plans shall be prepared by a registered Civil Engineer in accordance with Chapter 70 of the Uniform Building Code and the Project Soils Report.

2. A grading permit shall be required prior to beginning grading and construction activities.

3. Grading plans may require the Geotechnical Engineer's signature at the discretion of the City Engineer.

4. The grading plan shall be on sheets of the same quality and size as the improvement plans.

5. The plan shall clearly show each lot number, how each lot drains, and the pad elevation of each lot.

6. Each lot must drain to the street, without crossing the property line of any other lot.

7. The elevation differential between rear and side abutting lot lines shall not exceed twelve inches (12") without constructing concrete retaining walls.

8. If retaining walls are needed, they shall be constructed of concrete. All concrete or masonry walls are to conform to the materials and specifications provided by the wall manufacturer or designing engineer.

9. Maximum lot grading shall not exceed eight percent (8%) in any direction.

10. The plan shall show all drainage facilities being installed, clearly labeling high and low points and curb elevations.

11. Every part of the subdivision shall be designed with a drainage release such that if any portion of the storm drain system fails, water shall stand in the street no less than 1.0 feet below the pad elevation of any house.

12. The plan shall clearly show (by contours, elevations, typical cross sections, etc.) the relationship of the grading plan to the existing ground and drainage pattern of adjacent properties.

13. Existing drainage patterns on adjacent properties must remain the same (or be improved) by the grading plan for the subdivision.

14. Lots shall be graded to within 0.2 feet plus or minus of the elevations shown on the approved plan.

15. The plan shall indicate that an Engineer's Certificate for the grading shall be required prior to acceptance of the improvements.

16. The plans shall identify trees to be removed with an "X". Any trees not so marked on the plans are to remain.

11.03 NON-RESIDENTIAL LOT GRADING

A. Intent: Preclude steep slopes along the front, side and rear lot areas that would encourage erosion, make landscaping difficult, cause driveways to be unreasonably steep and threaten the stability of fences. The prohibiting of steep lot slopes will encourage the percolation of irrigation and rainfall and will reduce the amount of run-off water to be handled by the City drainage system. The intent of the following specifications is to apply to the basic grading of the lot before building construction and is not intended to restrict property owner landscaping.

B. Grading Plan: A grading plan shall be included in the improvement plans for the project. Guidelines for the preparation of the grading plan are as follows:

1. Grading plans shall be prepared by a registered Civil Engineer in accordance with Chapter 70 of the Uniform Building Code and the Project Soils Report.

2. Grading plans may require the Geotechnical Engineer's signature at the discretion of the City Engineer.

3. The grading plan shall be on sheets of the same quality and size as the improvement plans.

4. The grading plan shall be the same scale as the improvement plans.

5. The plan shall clearly show each lot number, how each lot drains, and the pad elevation of each lot.

6. The site must be graded so storm runoff is collected in a drainage system and conveyed via underground pipes to a proper point of discharge. This point of discharge shall be an underground or open channel storm drainage system if one exists in the public street along the frontage of the project site. If no system exists, the drainage may discharge through underground pipes into the street gutter via an under the "sidewalk drain" per Standard Detail 0435. Runoff flowing over driveways into the street shall be avoided. Grade breaks shall be within four feet (4') of back of walk.

7. The differential in elevations between rear and side abutting lot lines shall not exceed twelve inches (12") without construction of retaining walls.

8. If retaining walls are needed, they shall be constructed of concrete.

9. Maximum lot grading slope shall not exceed eight percent (8%) in any direction.

10. The plan shall show all drainage facilities being installed, clearly labeling high and low points and curb elevations.

11. Every part of the project must be designed with a drainage release. The drainage release shall be such that if any portion of the storm drain system fails, water shall stand in the street no less than 1.0 feet below the pad elevation of any building.

12. The plan shall clearly show (by contours, elevations, typical cross sections, etc.) the relationship of the grading plan to the existing ground and drainage pattern of adjacent properties.

13. Existing drainage patterns on adjacent properties must remain the same (or be improved) by the grading plan for the proposed project.

14. Lots shall be graded to within 0.2 feet plus or minus of the elevations shown on the approved plan.

15. The plans shall indicate that an Engineer's Certificate for the grading will be required prior to acceptance of the improvements.

16. The plans shall identify trees to be removed with an “X”. Any trees not so marked on the plans are to remain.

11.04 EROSION AND SEDIMENTATION CONTROL PLAN

A. Plan: An erosion and sedimentation control plan shall be prepared for all projects. The plan shall be consistent with the guidelines of the Storm Water Pollution Prevention requirements in Section 19 of the Construction Specifications. The plan shall include site map(s), and identification of construction/contractor activities describing measures for providing erosion and sediment control. The plan shall be submitted for review along with the SWPPP. Upon approval, the SWPP and erosion and sediment controls must implemented before construction starts.

If the proposed erosion control measures can be adequately described by reference to City Standard Details, a separate plan sheet may not be required. Reference to the City Standard Details and Erosion Control Notes can be placed on the Grading Plan. If, however, in the opinion of the City Engineer, locations or details of erosion control appurtenances cannot be adequately described in notes, a separate Erosion Control Plan must be prepared. The Design Engineer shall consult the City Engineer regarding the need for a separate Erosion Control Plan prior to commencing preparation of project plans.

B. Erosion Control Notes: Notes shall be placed on the Erosion Control Plan (or on the Grading Plan if no separate Erosion Control Plan), addressing the following:

1. Erosion and sediment control measures shall be effective for the duration of the construction activity.

2. No storm runoff water shall be allowed to drain directly into the existing underground storm system before the onsite storm drain system is installed.

3. As soon as is practical after the new onsite storm system is installed, the catch basins shall be installed and BMP's shall be installed as described in section 19.05, Construction Specifications.

4. Should the proposed onsite storm system not be installed by October 1st, temporary sediment basins shall be constructed around the openings of any existing storm pipes that drain the site, per CASQA BMP's and standards or per a special detail shown on the plan.

5. The name, address and 24-hour telephone number of the person responsible for implementation of the erosion and sedimentation control plan shall be provided.

6. Provide stabilized access 50' minimum length by 10'-15' minimum width. The minimum depth of stones for the access road shall be 12" or as recommended by a soils engineer. Select entrance stabilization materials (aggregate, HMA, concrete greater than 3" but smaller than 6") based on longevity, required performance and site conditions. Properly grade the access area to prevent runoff and design it to support the heaviest vehicles in use. Other measures to prevent tracking onto roadways may be used if

approved by the City. This does not need to be done at driveways, which will be closed by immovable barricades during construction.

7. All erosion and sedimentation control measures shall be maintained until disturbed areas are stabilized. Changes to the Erosion and Sedimentation Control Plan shall be made to meet field conditions, but only with the approval of or at the direction of the City Engineer.

8. During the rainy season as specified in Note "1", all sidewalk and paved areas shall be kept clear of earth material and debris. The site shall be maintained so as to minimize sediment laden runoff from entering any storm drainage system.

9. The Erosion and Sedimentation Control Plan covers only the first winter during which construction is to take place. Plans are to be resubmitted prior to September 1 of each subsequent year until the City accepts the site improvements.

10. The responsibility of the Contractor to inspect and repair all erosion control facilities at the end of each work day during the rainy season.

11. The responsibility of the Contractor to clean out sediment basins whenever the level of sediment reaches the sediment clean out level indicated on the plans.

12. The responsibilities of the Contractor to protect temporary borrow areas and/or stockpiles with appropriate erosion control measures satisfactory to the City Engineer.

13. The cleaning of paved streets, during and at the completion of construction, shall be performed with mechanical sweepers. The use of water trucks to "wash down" the street is prohibited.

14. The Erosion and Sedimentation Control Plan, details, notes and calculations if required, must be a part of the plan check submittal package for either Grading Permit only or Final Site Approval. The Design Engineer prior to plan preparation should consult the City Engineer if the need for a separate plan is in doubt.

{Blank Page}

SECTION 12: BUS SHELTERS

12.01 GENERAL

Bus shelters are covered, semi-enclosed waiting areas with benches located at bus stops. Bus shelters offer protection from inclement weather conditions, provide for passenger comfort, and establish a transit presence within a local area.

12.02 PLACEMENT GUIDELINES

Bus shelters shall meet the following minimum placement guidelines:

A. Shelters located adjacent to buildings shall be placed a minimum of 8 inches away from the building wall.

B. Shelters shall not be placed so as to obstruct sidewalks or access to and from transit vehicles.

C. Shelters should not be placed where they obstruct visibility at street intersections or where vehicles enter onto an arterial from a private roadway or driveway.

12.03 DESIGN

Contact Yolo County Transportation District for bus shelter design requirements.

See Detail 1200 for bus shelter pad requirements.

{Blank Page}

SECTION 13: TREE PLANTING REQUIREMENTS

13.01 GENERAL

Approved trees for use in City of Woodland rights-of-way and City property, including parks.

Note there are no perfect trees and no one tree will meet all the needs of a particular area. It is very important that a tree species or cultivar be selected that will adapt best to the space available both horizontally and vertically while still meeting the aesthetic needs of the area.

Planting within City right-of-way and in City property shall be in accordance with City planting guidelines and subject to approval by the City.

13.02 CITY APPROVED TREE LIST (COMPLETE)

The tables below show information on City approved deciduous and evergreen trees giving common name and botanical name. Additional information regarding City approved Street Trees follows this comprehensive list.

DECIDUOUS	
Botanical Name	**Common Name**
Acer buergeranum (3)	Trident Maple
Acer palmatum (3)	Japanese Maple
Acer pseudoplatanus (1) (2) (3)	Sycamore Maple
Acer rubrum (3)	Red Maple
Carpinus betulus (1)	*European Hornbeam
Cercis candensis (1) (3)	*Eastern Redbud
Fraxinus velutina 'Rio Grande' (1) (2)	Fan-Tex Ash
Ginko biloba; (1) (3)	Maiden Hair Tree
Ginko biloba "Autumn Gold' (1)	Maiden Hair Tree
Ginko biloba 'Saratoga' (1)	Maiden Hair Tree
Gleditsia triacanthos 'Sunburst' (3)	Honey Locust
Lagerstromia indica (1) (3)	*Crape Myrtle
Magnolia soulangiana (3)	Saucer Magnolia
Magnolia stellata (3)	Star Magnolia
Malus floribunda 'Prarifire' (1) (2) (3)	*Japanese Flowering Crabapple

DECIDUOUS	
Botanical Name	**Common Name**
Nyssa sylvatica [(1) (3)]	Tupelo Tree
Olea europaea 'Wilsonii' [(2)]	Fruitless Olive Tree
Botanical Name	**Common Name**
Quercus casteneaefolia [(3)]	Chestnut Leaf Oak
Quercus coccinea [(1)]	+Scarlet Oak
Quercus douglasii [(1) (3)]	+Blue Oak
Quercus lobata [(1) (2) (3)]	+Valley Oak
Quercus phellos [(3)]	Willow Oak
Quercus robur [(1)]	+English Oak
Quercus rubra [(1) (2) (3)]	Red Oak/Scarlet Oak
Quercus shumardii [(2)]	Texas Red Oak
Robinia idahoensis [(3)]	Idaho Locust
Sapium sebiferum [(2) (3)]	Chinese Tallow Tree
Tilia cordata 'June Bride' [(2) (3)]	Little Leaf Linden
Tilia tomentosa [(2)]	Silver Linden
Ulmis parvifolia [(3)]	Chinese Elm
Zelkovaserata [(1)]	Sawleaf Zelkova

EVERGREENS	
Botanical Name	**Common Name**
Calocedrus decurrens [(3)]	Incense Cedar
Cedrus atlantica [(1)]	Atlantic Cedar
Cedrus deodara [(3)]	Deodar Cedar
Cryptomeria japonica [(1)]	Japanese Cryptomeria
Magnolia grandiflora [(3)]	Southern Magnolia
Pinus brutia [(1)]	Calabrian Pine
Pinus canariensis [(1) (2)]	Canary Island Pine
Pinus eldarica [(2)]	Afgan Pine
Pinus patula [(3)]	Jelecote Pine

EVERGREENS	
Botanical Name	**Common Name**
Pinus thumbergiana [3]	Japanese Black Pine
Quercus ilex [1] [2]	+Holly Oak
Quercus suber [1] [2]	+Cork Oak
Quercus virginiana [1] [3]	+Southern Live Oak
Quercus wislizenii [2] [3]	Interior Live Oak
Rhus lancea [1] [3]	*African Sumac
Schinus molle [3]	California Pepper Tree
Sequoia sempervirens [3]	Coast Live Redwood

*Only trees acceptable for planting strips with overhead wires
+Limited use only due to large space requirements.

(1) Approved City of Woodland street trees (see additional information below)
(2) Suggested trees for use in Spring Lake Development or other areas within the City in which soils test reveal high Ph, high boron, high salt content and poor drainage.
(3) Approved City of Woodland park tree. Additional trees not listed shall require review and approval by the City prior to final plan acceptance.

13.03 APPROVED STREET TREE LIST

Recommended street trees for the Woodland area and a general description of their characteristics.

All of the trees on this list have characteristics that make them desirable street trees. Some also have characteristics that may make them undesirable in certain locations. All of the trees listed have been selected for their resistance to injurious insects and diseases. The list of trees and the accompanying information about each tree is meant to be used as a guide. Landscaping plans for City right-of-way are subject to City approval.

DECIDUOUS	
Common Name	**Botanical Name**
*European Hornbeam	Carpinus betulus
Fan-Tex Ash	Fraxinus velutina 'Rio Grande'
Maidenhair Tree	Ginko biloba; G.b. "Autumn Gold'; G.b. 'Saratoga'

DECIDUOUS	
Common Name	**Botanical Name**
Sawleaf Zelkova	Zelkovaserata
Sycamore Maple	Acer pseudoplatanus
Sour Gum Tree	Nyssa sylvatica

*Only trees available for planting strips with overhead wires

ORNAMENTALS	
Common Name	**Botanical Name**
*Crape Myrtle	Lagerstromia indica
*Eastern Redbud	Cercis candensis
*Flowering Crabapple	Malus floribunda 'Prairiefire'

*Only trees available for planting strips with overhead wires

CONIFEROUS EVERGREENS	
Common Name	**Botanical Name**
Atlantic Cedar	Cedrus atlantica
Calabrian Pine	Pinus brutia
Canary Island Pine	Pinus canariensis
+Coast Redwood	Sequoia sempervirens
Deodar Cedar	Cedrus deodara
Incense Cedar	Calocedrus decurrens
Japanese Cryptomeria	Cryptomeria japonica

BROADLEAF EVERGREEN - SOUNDWALLS ONLY	
Common Name	**Botanical Name**
*African Sumac	Rhus lancea

*Only trees available for planting strips with overhead wires

THE OAKS	
Common Name	**Botanical Name**
+Blue Oak	Quercus douglasii
+Burr Oak	Quercus macrocarpa
+Cork Oak	Quercus suber
+English Oak	Querus robur
+Holly Oak	Quercus ilex
+Scarlet Oak	Quercus coccinea
+Southern Live Oak	Quercus virginiana
+Valley Oak	Quercus lobata

+Limited use only due to large space requirements.

13.04 TREE PLANTING GUIDELINES

A. To make the best use of the space available, apply the following guidelines:

25' min. – 40' maximum between street trees
5' from electric/water/sewer/gas lines, house drains, typically marked by valve or cleanout
Trees are not allowed in areas with less than 5' of cover over storm drain lines
12' from light poles
30' from intersections
15' from alleys
5' from driveways
7.5' from back of sidewalk (does not apply to trees in the park strip)
6' from sound walls
Avoid planting between driveways or on property lines.

B. Traffic sight distance restrictions shall be as follows:

1. Two-Way Stop Controlled Intersections

Landscape planted within the landscape or tree restriction areas as shown in Figure 13A, shall have a maximum untrimmed height at maturity of 20 inches.

Trees may not be planted within the tree restriction area unless all branches will exceed a clear height of 7 feet at maturity without excessive pruning. Only non-coniferous trees may be planted in the tree restriction area.

2. Roundabouts

Landscape and tree restrictions at roundabout intersections shall follow the standards set forth in Figure 13A for the appropriate street class using the values

for areas where parking is not allowed. For all roundabout intersections, the value of 'y' shall be increased to 25 feet.

Landscape planted on roundabout splitter islands shall have a maximum untrimmed height at maturity of 12 inches. Trees shall not be planted on splitter islands.

It is acceptable and necessary to plant sight restricting objects in the center island of a roundabout to make drivers aware that the intersection is not a through intersection.

3. Medians

Landscape planted on medians must be restricted at intersections for a distance as shown below, based upon the speed of the roadway. Distances are measured from the nose of the median.

Landscape planted in this restricted area shall have a maximum untrimmed height at maturity of 12 inches.

Trees may not be planted within the tree restriction area unless all branches will exceed a clear height of 7 feet at maturity without excessive pruning. Only non-coniferous trees may be planted in the tree restriction area.

Speed	Length of Restriction
30 mph	235 ft
35 mph	280 ft
40 mph	325 ft
45 mph	370 ft
50 mph	415 ft
55 mph	550 ft

4. Islands

Landscape planted on right turn, roundabout splitter and other traffic islands shall have a maximum untrimmed height at maturity of 12 inches. Trees shall not be planted on islands.

13.05 FIGURE 13A – REQUIRED INTERSECTION SIGHT DISTANCE

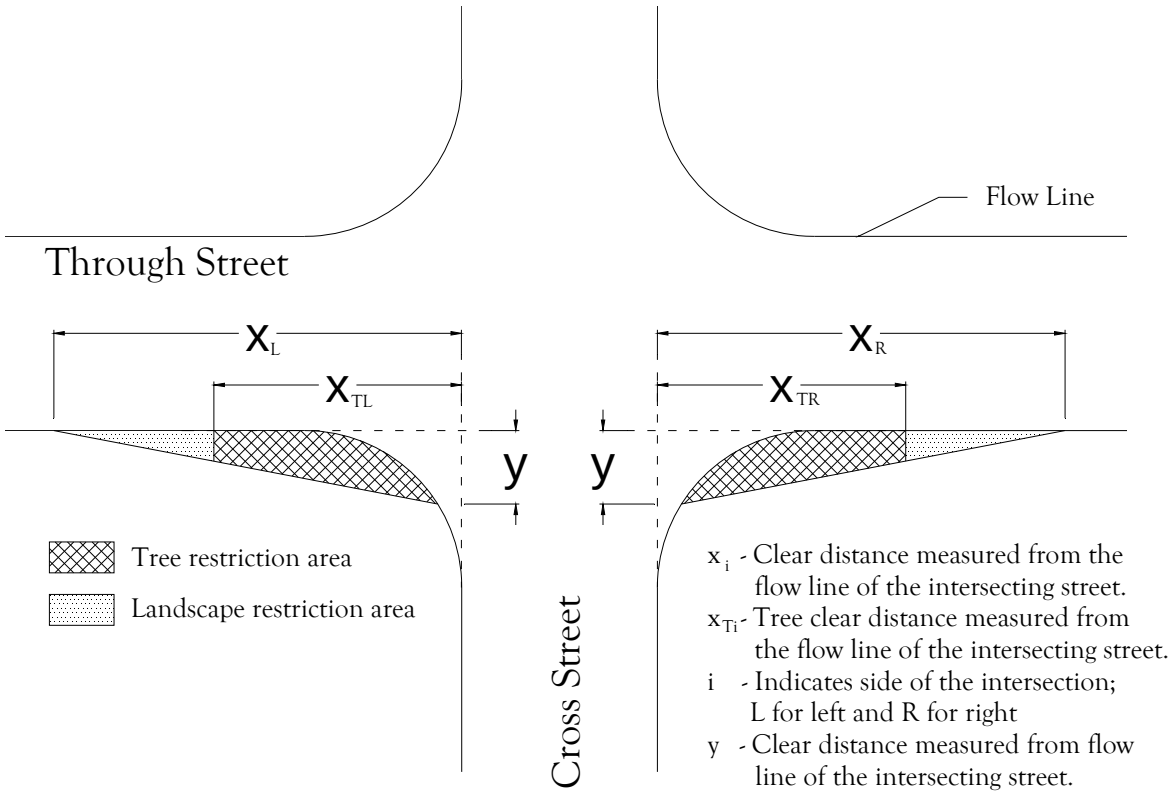

Through Street[1]:	Design Speed (mph)	Parking Allowed	x_L (ft)	x_{TL} (ft)	x_R (ft)	x_{TR} (ft)	Y[2] (ft)
Collector	30	Yes	115	55	70	35	8
		No	150	100	100	70	13
2 Lane Arterial	35	Yes	110	35	75	25	8
		No	150	90	110	65	13
4 Lane Arterial	35	Yes	205	80	75	25	8
		No	250	150	100	60	13
	40	Yes	125	100	65	55	8
		No	170	115	95	65	13
4 Lane Arterial with Median	45	Yes	190	0	30	0	8
		No	340	200	100	60	13
Industrial	45	Yes	170	107	115	70	8
		No	225	170	160	120	13

[1]Local-local intersections are normally uncontrolled and have been omitted from this standard.
[2]At roundabout intersections the value of 'y' shall be 25 feet.

{Blank Page}

PART 2. STANDARD DETAILS

{Blank Page}

-Utility Trenching and Backfill-	
Trench Terminology	0200
ASTM C 12 VCP Bedding Details	0205
Pipe Bedding and Trench Backfill in Existing Paved Areas	0210
Pipe Bedding and Trench Backfill in Unpaved Areas[4]	0211
Narrow Trench	0213
Trench Repair for Streets Under Moratorium	0214
Pipe Boring and Jacking	0220

-Streets-	
Vertical Curb, Gutter and Sidewalk	0300
Springlake Vertical Curb, Gutter with Detached Sidewalk	0301
Vertical Curb, Gutter with Detached Sidewalk	0302
Low Profile Curb, Gutter and Sidewalk	0305
Rolled Curb, Gutter and Sidewalk	0310
Curb Bulb Outs	0313
Curb and Gutter	0315
Construction Joints	0316
Type "A" Residential Driveway Vertical Curb	0320
Type "B" Residential Driveway Rolled Curb	0325
Type "C" Commercial Driveway	0330
Type "C" (5 feet) Commercial Driveway	0331
Commercial Driveway with Curb and Gutter Separate from Sidewalk	0332
Residential Driveway with Curb and Gutter Separate from Sidewalk	0333
Type "D" Industrial Driveway	0335
Retrofit Conforms at Driveway or Curb and Gutter	0340
Permanent Patch in Existing Street	0341
Resetting Ex. Utility Structures After Repaving Work	0342
Bus Turnout	0343
Street Monument	0345
Control Network Monument for Walkways	0346
Control Network Monument for Non-Traffic Areas	0347
Control Network Monument for Traffic Areas	0348
Dead End Street Signing	0350
Sidewalk Barricade	0352
Curb Ramp for Monolithic Sidewalk	0355
Curb Ramp for Sidewalk with Planter Strips	0357
Stamped Concrete	0360
Stamped Concrete Crosswalk	0361
Square Cul-De-Sac Street Layout	0365

[4] Grey shading indicates revised detail.

-Streets-

Roundabout	0370
Curb Address Numbers	0375
Springlake Alley Section	0380
Speed Cushion	0385

-Storm Drain System-

Curb Inlet	0400
Curb Inlet Used with Low Profile Curb	0405
Storm Drain Concrete Stamp	0408
Catch Basin Base	0410
Curb Inlet Manhole	0415
Manhole Frame and Cover	0420
Type 1 Storm Drain Manhole	0425
Type 2 Storm Drain Manhole	0430
Under Sidewalk Drain Off Private Property	0435
Reinforced Concrete Connection Collar	0440

-Sanitary Sewer System-

Sewer Service Lateral	0500
Special Sewer Service Lateral	0501
Residential Service Lateral Trench	0505
Sewer Lateral Cleanout	0510
Sewer Lateral Cleanout (Joint Trench Under Walk)	0512
Temporary Mainline Cleanout	0513
Standard Sewer Manhole	0515
Inside Sanitary Sewer Drop Manhole	0518
Sewer Line Taps	0522

-Water System-

1", 1 ½" and 2" Water Service Meter Box Location	**0700**
1",1 ½" and 2" Water Service, Meter, Valve and Box at Back of Walk (rev)	**0705**
1",1 ½" and 2" Water Service, Meter, Valve and Box in Planter Strip (rev)	**0706**
Water Meter Box in Residential Driveways (new)	0707
AMR Water Meter Dual Site Installation (rev)	**0708**
1", 1 ½" and 2" Water Taps	**0710**
Insulating Flange, Kit-Flanged Water Services 1 ½" and Larger	0712
4" and Larger Domestic Metered Water Service	**0715**
4" and Larger Connections to Existing Water Main	0720
Water Valve and Valve Box in Paved Areas	0725
Valve Box in Landscape Areas	0727
Fire Hydrant (Water Main Under the Street)	0730
Fire Hydrant (Existing Water Main Behind the Sidewalk)	0735

-Water System-	
Blowoff Hydrant	0740
Water Distribution System Sampling Station	0745
Water Pipeline Thrust Blocks	0750
Pipe Restrained Length for DIP	0753
Pipe Restrained Length for PVC	0754
Types of Restrained Mechanical Joints	0755
Backflow Prevention Assembly, 4" and Larger	0760
Backflow Prevention Assembly, Less than 4"	0761
Fire Department Connection (rev)	**0762**

-Street Lighting-	
Street Lights (rev)	**0900**
Downtown Woodland Street Light (14')	**0902**
Street Light Locations	0905
Street Light Pole Foundation	**0910**
Electrical Street Light Box	0915
Springlake Street Light, 10' to 15' Pole	0916
Springlake Street Light, 15' or 18' Pole	0917
Springlake Street Light, 25' Pole	0918

-Traffic Signals-	
Conduit Schedule	1000
Mounting & Wiring Details Model 205 Optical Detector	1010
Fiber Optics and Signal Interconnect Pull Boxes	1015

-Bus Shelters-	
Bus Shelter Pad	1200

-Landscape and Irrigation-	
Bollard Placement	1304
Permanent Bollard	1305
Removable Bollard	1306
Header Board	1315
Concrete Mow Strip	1318
Concrete Mow Strip at Fence	1319
Concrete Path	1320
Decomposed Granite Path	1322
Tree and Shrub Planting	**1325**
Rotor Sprinklers	1330
Quick Coupler Valve	1332
Installation of Sprinkler Heads	1334
Tree Bubbler	1335

-Landscape and Irrigation-	
Main, Lateral and Control Wire Trench Layout	1338
Valve Box Layout	1339
Pedestal Mount and Wall Mounted Controller	1340
Manual Valve Installation	1345
Remote Control Valves	1347
Chain Link Fence up to 8' Height	1350
Ornamental Steel Fence	1352
Post & Cable Fence	1354
Back of Curb Sub-Drain	1358
Drain at Play Area Surfacing	1360
Play Area Surfacing and Curb	1362
Drinking Fountain	1365

-Street Signs-	
Breakaway Sign Installation 2x2 Pole and Anchor Assembly	1410
Sign Installation 2" Galvanized Pole	1412
Cantilever Angle Arm Street Sign Mount	1420
Street Name Sign Assembly	1425
No Parking Sign Mounting	1430
Aluminum Extrusion Mounting for School Signs	1435
Aluminum Extrusion Mounting for Regulatory Signs	1436
Aluminum Extrusion Mounting for Warning Signs	1437
Mast Arm Mounted Street Name Sign	1438
Crosswalk Striping	1440
Stop and Yield Striping Details	1445

SCALE : N.T.S.	FILE NAME	SPEC0200.DWG

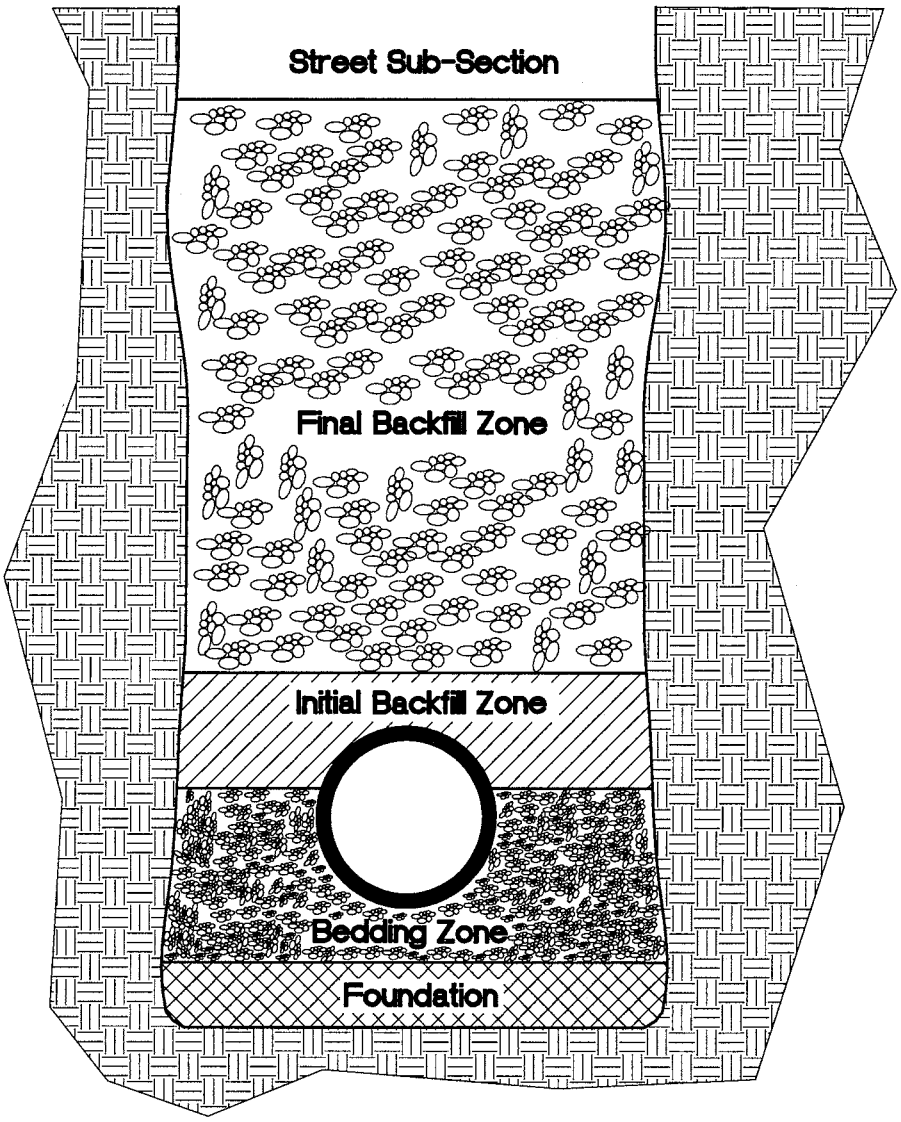

NO.	REVISION	BY

CITY OF WOODLAND
PUBLIC WORKS DEPARTMENT
ENGINEERING DIVISION

APPROVED BY
DATE 11/05/07 DICK DONNELLY, CITY ENGINEER

TRENCH TERMINOLOGY

0200

SCALE : N.T.S.	FILE NAME	SPEC0205.DWG

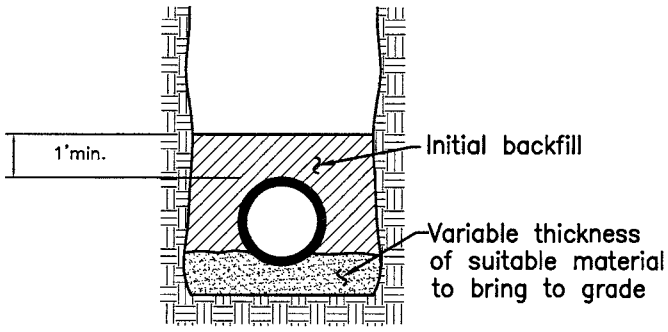

Load Factor 1.1
Flat or Restored Trench Bottom

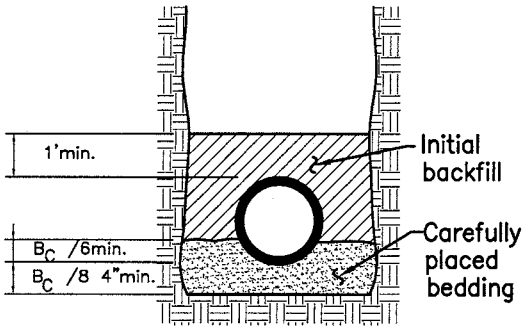

Load Factor 1.5

CLASS D

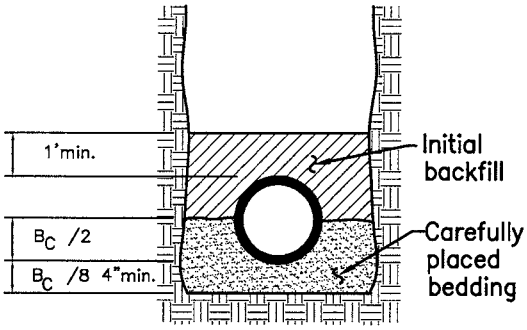

Load Factor 1.9

CLASS C

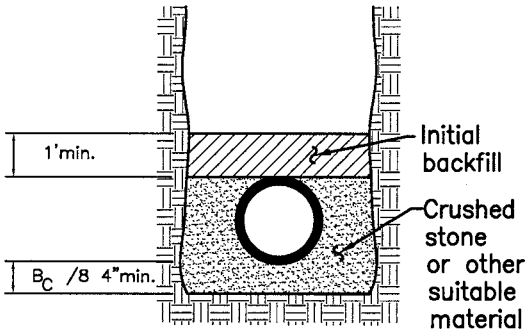

Load Factor 2.2

CLASS B

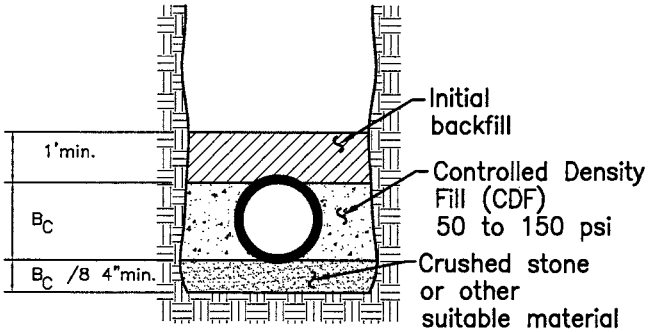

Load Factor 2.8

CRUSHED STONE ENCASEMENT

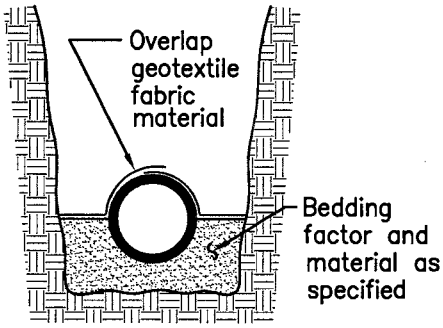

CONTROLLED DENSITY FILL (CDF)

NOTE: This type of construction requires the concrete to extend from the pipe to the trench wall.
CAUTION: Not recommended where native soils are expansive.

CONTROLLING MIGRATION OF BEDDING MATERIAL WITH GEOTEXTILE FABRIC

NO.	REVISION	BY

CITY OF WOODLAND
PUBLIC WORKS DEPARTMENT
ENGINEERING DIVISION
APPROVED BY
DATE 11/05/07 DICK DONNELLY, CITY ENGINEER

ASTM C 12
VCP BEDDING DETAILS

0205

SCALE : n.t.s.	FILE NAME	spec0210.dwg

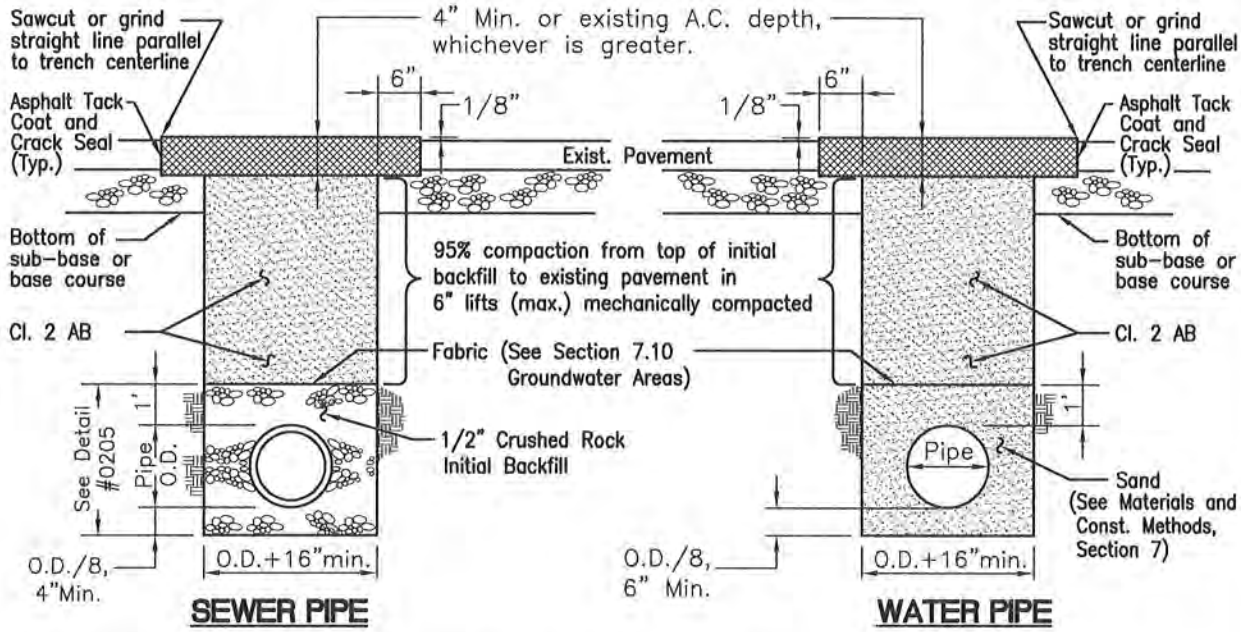

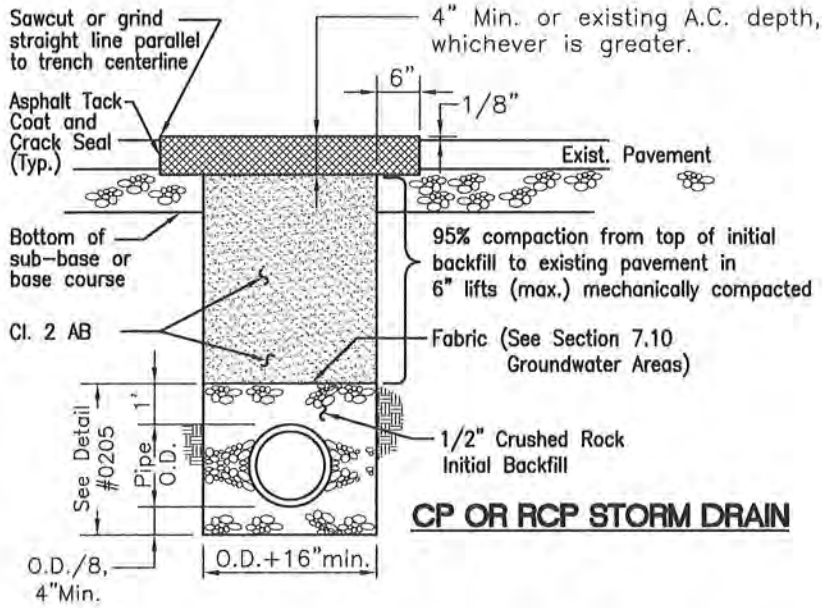

NOTES:

1. Trench design shall be consistent with Detail 0205.
2. Contractor shall submit for materials approval prior to use.
3. Mechanically compact all bedding and backfill materials. Jetting is not allowed.
4. Slurry cement may be substituted for granular materials. Anchor pipe to prevent floatation.
5. Use geotextile wrap per Detail 0205 when soil is pourous enough to threaten migration of backfill fines.
6. See Detail 0214 for pavement restoration in Streets Under Moratorium.

REVISION	CITY OF WOODLAND COMMUNITY DEVELOPMENT DEPARTMENT ENGINEERING DIVISION	Pipe Bedding and Trench Backfill in Existing Paved Areas	0210
PVC Sewer Revision Revised Notes	APPROVED BY DATE 03/23/10 BRENT MEYER, CITY ENGINEER		

SCALE : n.t.s.	FILE NAME	spec0211.dwg

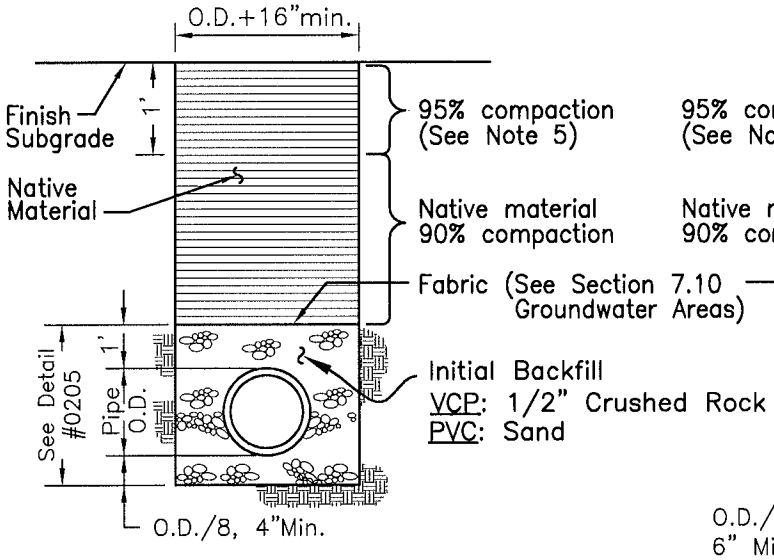

SEWER PIPE

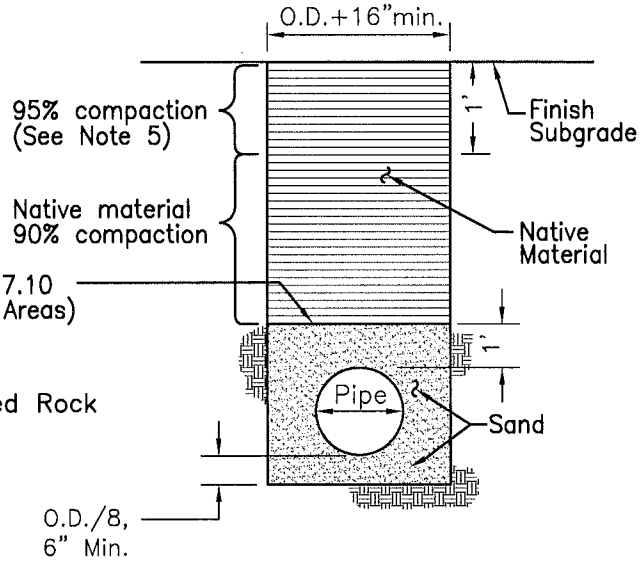

WATER PIPE

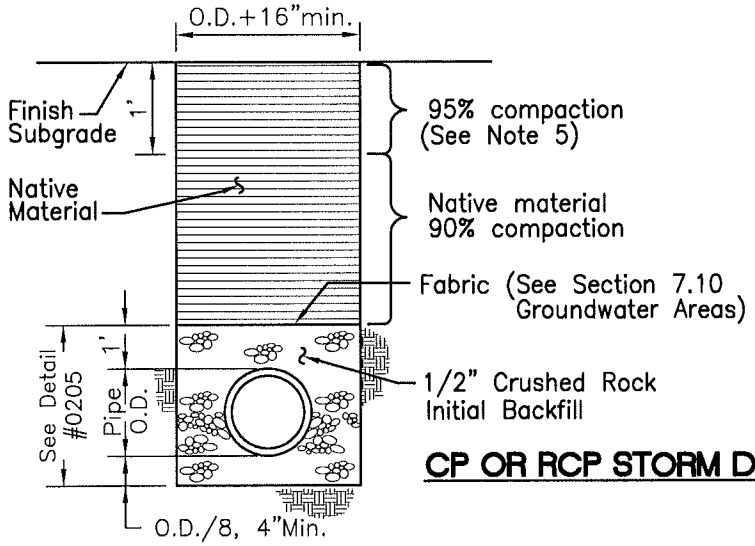

CP OR RCP STORM DRAIN

NOTES:

1. Trench design shall be consistent with Detail 0205.
2. Contractor shall submit for materials approval prior to use. Minimum sand equivalent for native materials is 20.
3. Mechanically compact all bedding and backfill materials. Jetting is not allowed.
4. Slurry cement may be substituted for granular materials. Anchor pipe to prevent floatation. Provide 1' of native material at top of trench.
5. In areas that remain unpaved, compaction may be reduced to 90%.
6. Use geotextile wrap per Detail 0205 when soil is pourous enough to threaten migration of backfill fines.
7. This detail is applicable to new roadway areas during construction.

REVISION	CITY OF WOODLAND COMMUNITY DEVELOPMENT DEPARTMENT ENGINEERING DIVISION	Pipe Bedding and Trench Backfill in Un-paved Areas	0211
Change reference to Note 5			
Reduce 95% depth			
	APPROVED BY DATE 11/22/10 BRENT MEYER, CITY ENGINEER		

SCALE : N.T.S.	FILE NAME	SPEC0213.DWG

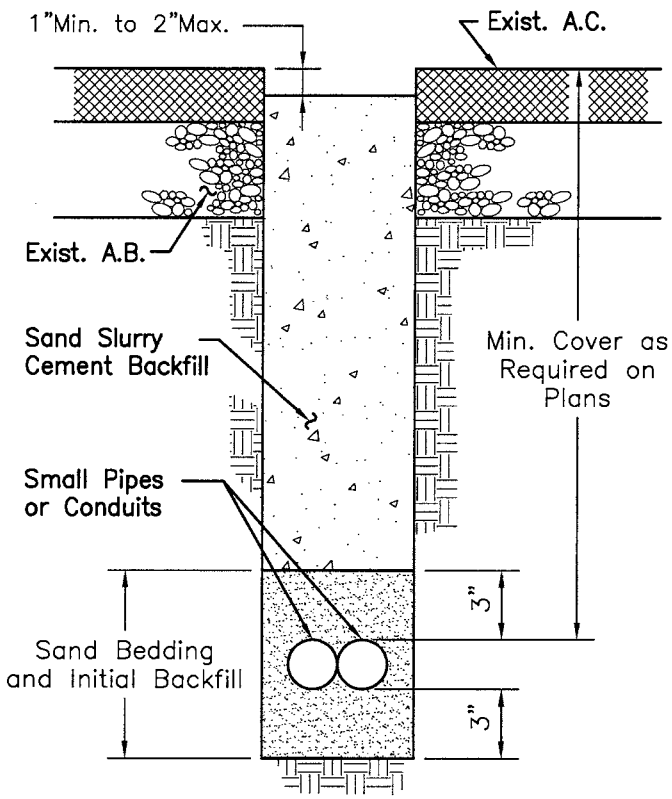

EXISTING STREET
EXCAVATION AND BACKFILL

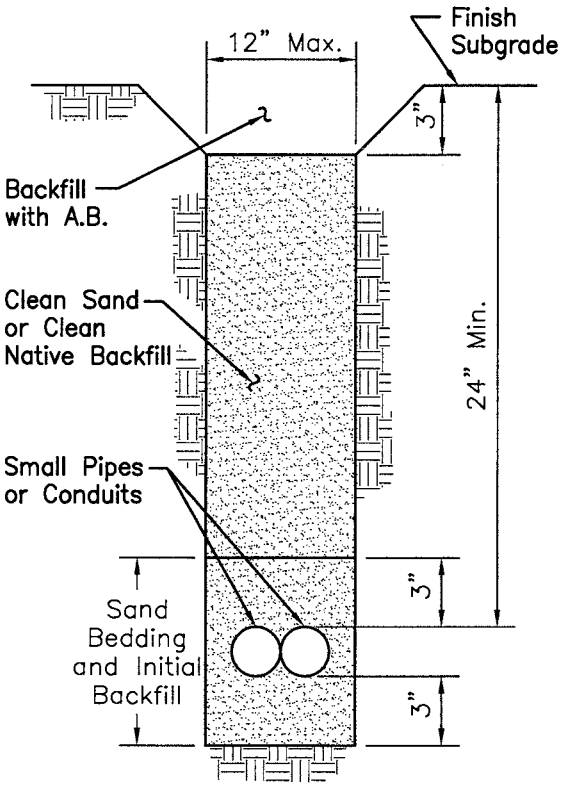

NEW STREET
(WITHIN RIGHT OF WAY)

NOTES:

1. These requirements apply to all trenches up to 12" in width within public right of way (See Section 7 of the Materials and Construction Methods of these Standard Specifications).
2. In existing streets, trenches shall be protected with steel plates until final paving.
3. Minimum sand equivalent value for native materials shall be 20.
4. Red coloring shall be added to the slurry cement backfill when electrical power is present in the conduits at the rate of one pound per cubic yard of slurry cement.

NO.	REVISION	BY

CITY OF WOODLAND
PUBLIC WORKS DEPARTMENT
ENGINEERING DIVISION
APPROVED BY
DATE 11/05/07 DICK DONNELLY, CITY ENGINEER

NARROW TRENCH

0213

SCALE : n.t.s.	FILE NAME	spec0214.dwg

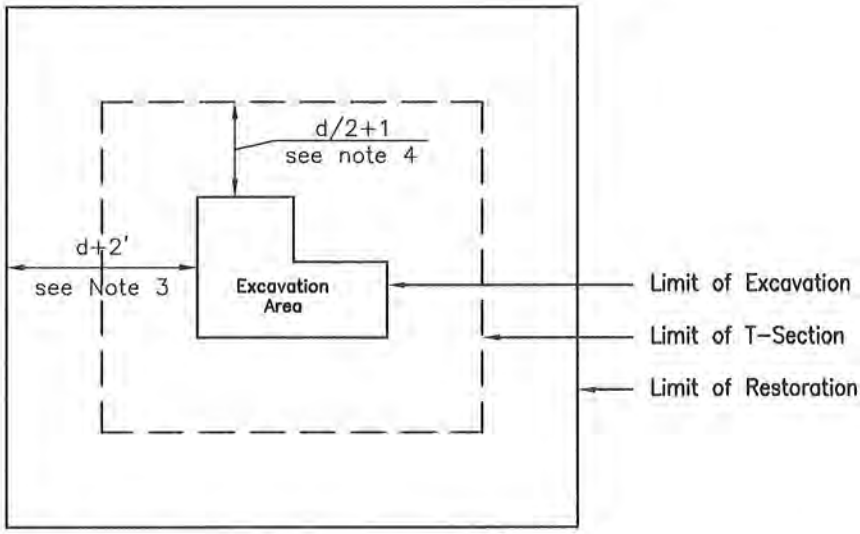

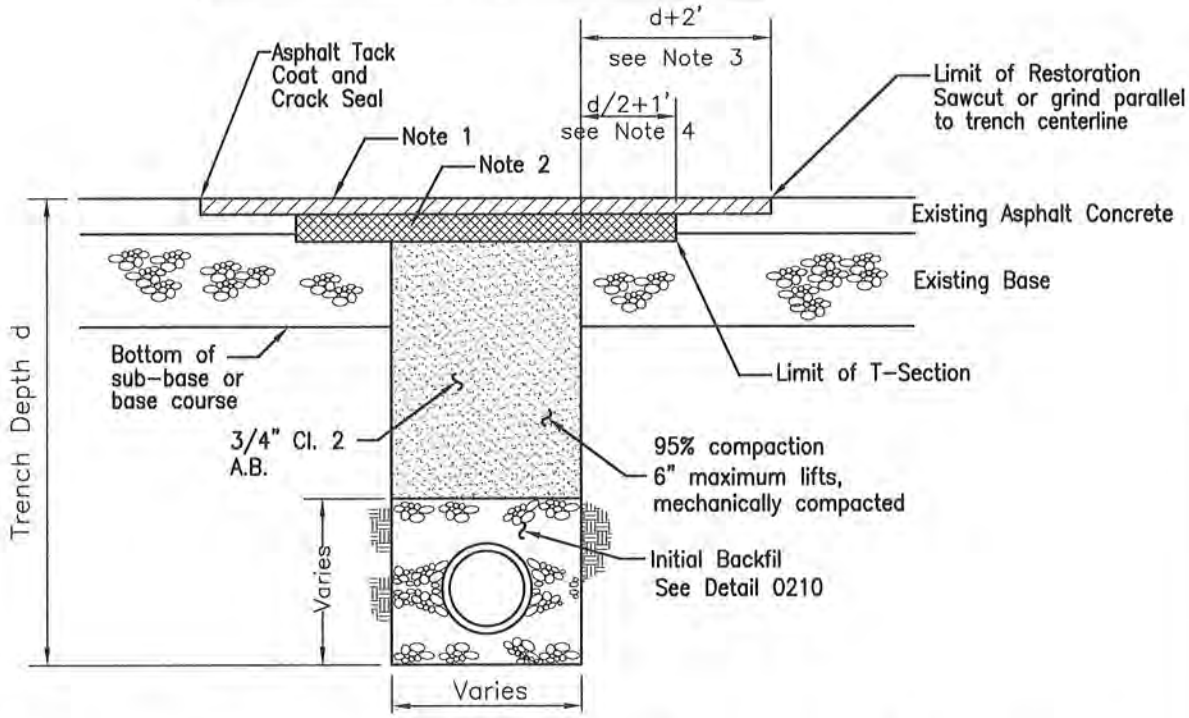

NOTES:

1. Grind and replace existing pavement a minimum depth of 2" in accordance with these standards.
2. Construct new asphalt concrete surface 2" thicker than existing section but not less than 5". Total thickness includes 2" surface course detailed in note 1.
3. Restoration width shall be equal to the trench depth plus 2' but not less than 10'. Where the limit is within 2' of the lip of gutter or lane line, restoration shall extend to that boundary. Where the limit is within a wheel path, restoration area shall be extended beyond the wheel path a minimum of 1'.
4. T-section shall be equal to half the trench depth plus 1' but not less than 5'.
5. Restoration and T-section limits shall be rectangular areas and limits are measured from the widest portion of the excavation.
6. Restoration area and T-section areas shall be sawcut after backfill of trench is completed.
7. All trench bedding and backfill shall conform to Detail 0205 and 0210.

REVISION	CITY OF WOODLAND COMMUNITY DEVELOPMENT DEPARTMENT ENGINEERING DIVISION	Trench Repair for Streets Under Moratorium	0214
New Detail	APPROVED BY DATE 03/23/10 BRENT MEYER, CITY ENGINEER		

SCALE : N.T.S.	FILE NAME	SPEC0220.DWG

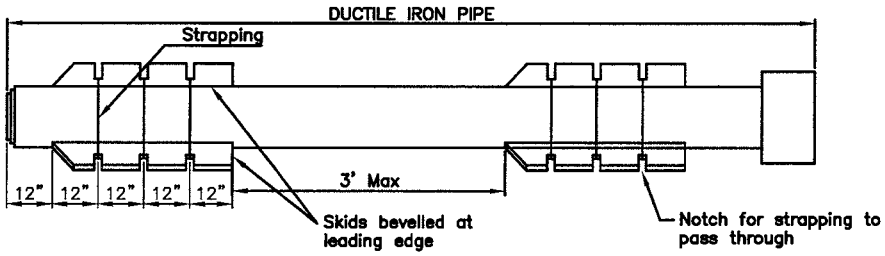

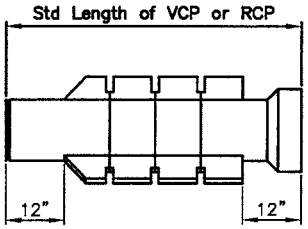

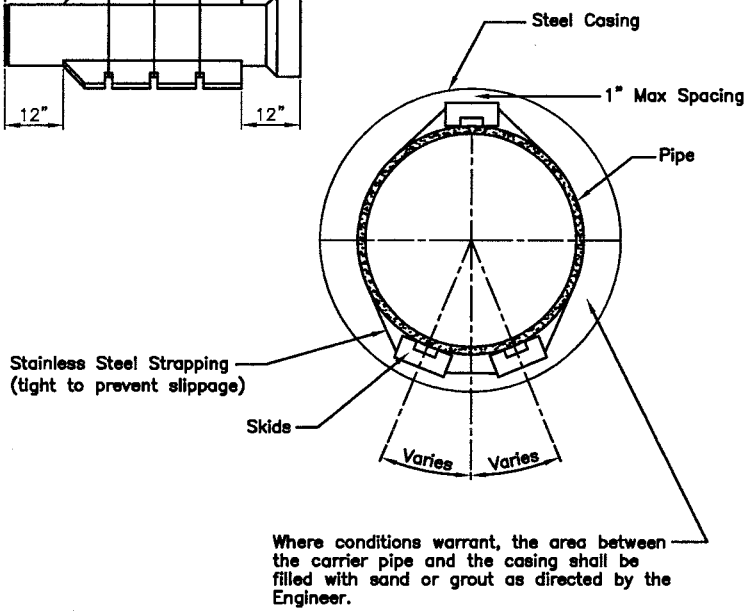

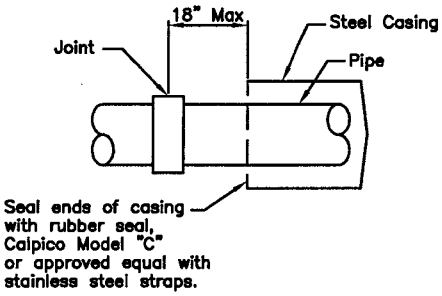

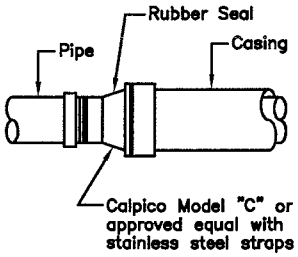

NOTES:

1. Casing shall be installed by the jacking and boring method to design grade.
2. Casing joints shall be welded in accordance with AWWA Standard C-206.
3. Plastic skids shall be provided as per detail above.
4. All wall casings shall be a minimum of 0.375 inches thick.
5. Ends of bore hole shall be sealed to prevent entrance of fill material.
6. A joint shall be installed at end of casing pipe per detail above.
7. Casing for pipes larger than 12" shall be approved by the City Engineer.
8. Skids shall be installed so that the first and last skids installed are located at the edge of the open ends of casing.

NO.	REVISION	BY

CITY OF WOODLAND
PUBLIC WORKS DEPARTMENT
ENGINEERING DIVISION

APPROVED BY
DATE 11/05/07 DICK DONNELLY, CITY ENGINEER

PIPE BORING AND JACKING

0220

{Blank Page}

SCALE : n.t.s.	FILE NAME	spec0300.dwg

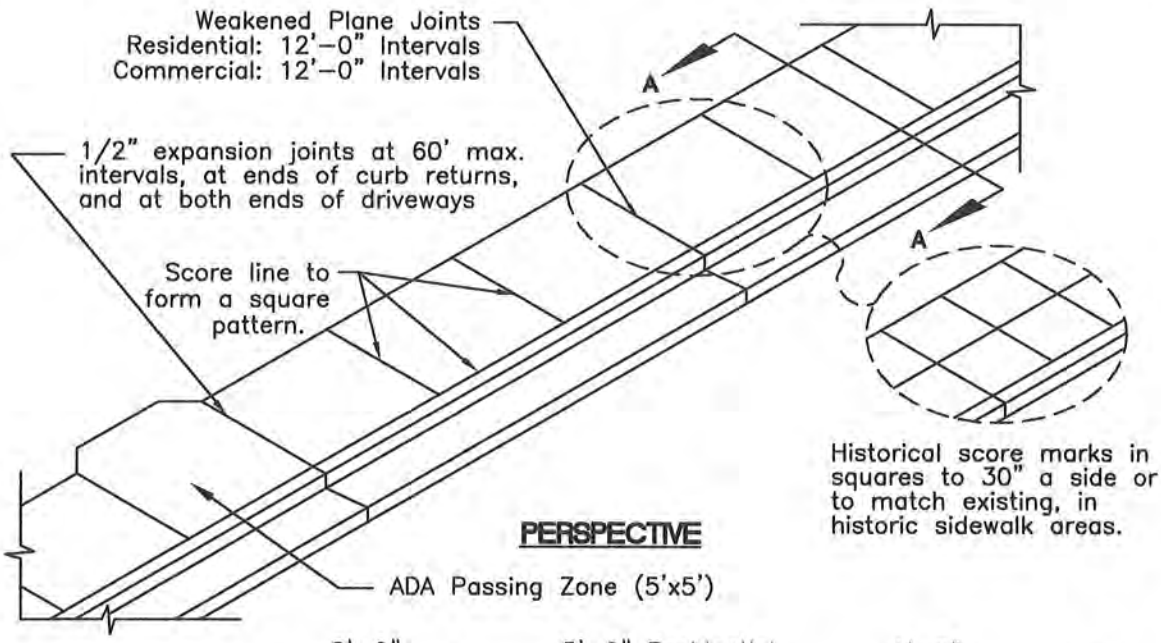

PERSPECTIVE

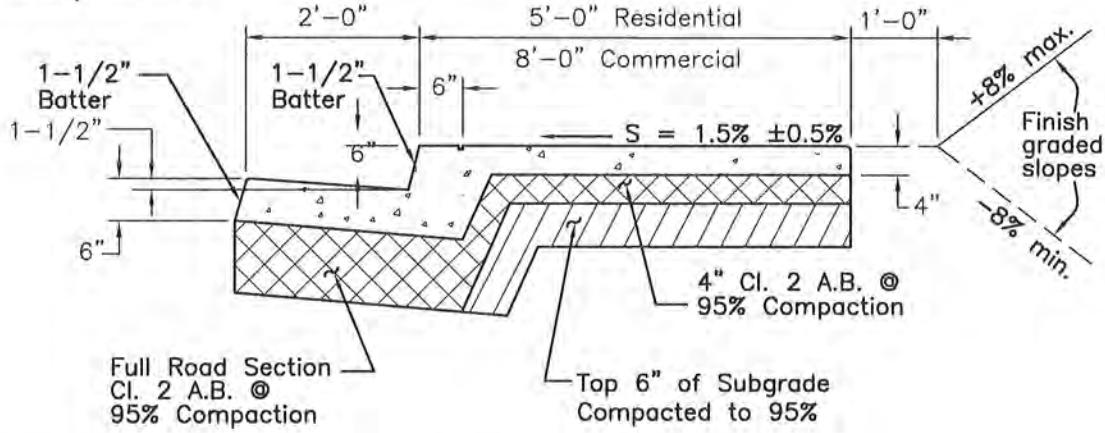

SECTION A-A

NOTES:

1. Score lines shall be 1/4" deep and form a square pattern.
2. Apply light broom finish to surface of walk at right angle with face of curb. Broom finish curb and gutter parallel with street.
3. Backfill behind sidewalk.
4. All sidewalk, curb and gutter shall be poured monolithically.
5. All edges shall have a 1/2" radius.
6. For concrete specifications see Section 5 of the Materials and Construction Methods Division of these Standard Specifications.
7. A 4'-6" transition shall be used between different curb types.
8. For new sidewalks less than 5' wide and equal to or greater than 200 ft in length, 5'x5' ADA passing spaces must be provided at 200' intervals within the public RW.

REVISION	CITY OF WOODLAND COMMUNITY DEVELOPMENT DEPARTMENT ENGINEERING DIVISION	Vertical Curb, Gutter & Sidewalk	0300
Define ADA Passing Zone Revise x-slope	APPROVED BY DATE 03/23/10 BRENT MEYER, CITY ENGINEER		

SCALE : n.t.s.	FILE NAME	spec0301.dwg

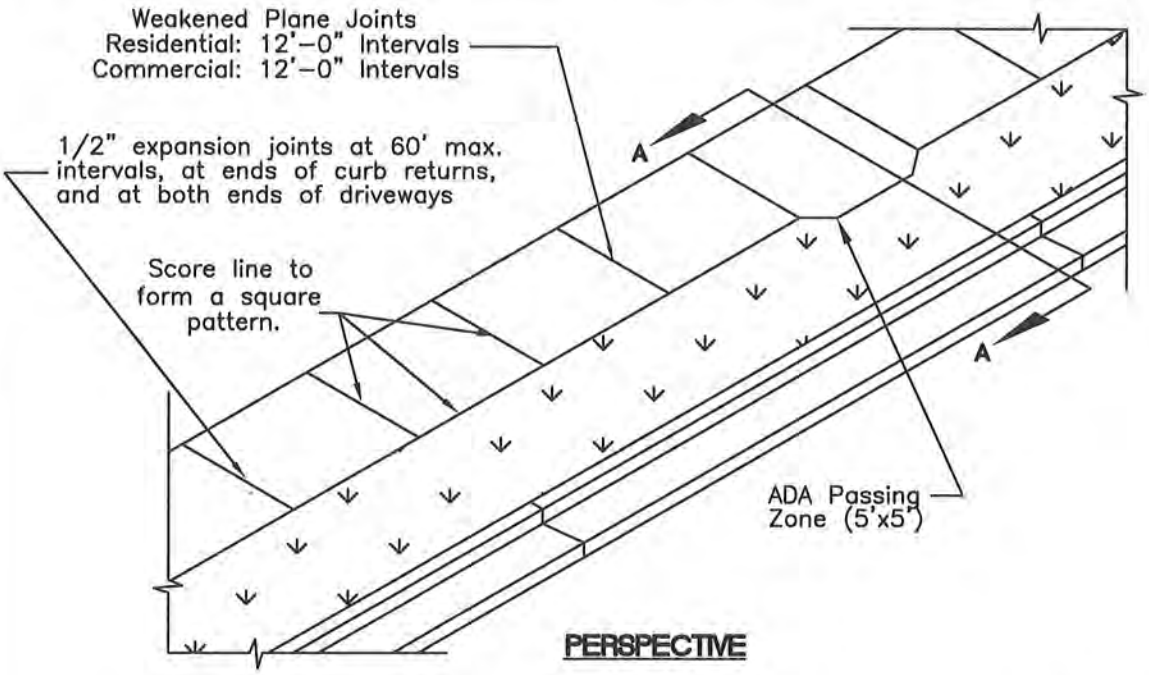

PERSPECTIVE

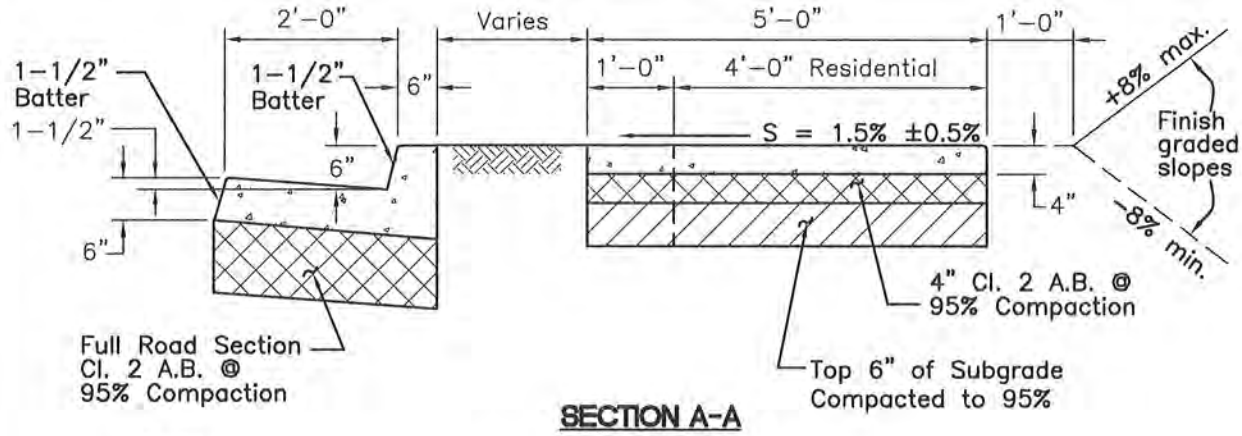

SECTION A-A

NOTES:

1. Score lines shall be 1/4" deep and form a square pattern.
2. Apply light broom finish to surface of walk at right angle with face of curb. Broom finish curb and gutter parallel with street.
3. Backfill behind sidewalk.
4. All curb and gutter shall be poured monolithically.
5. All edges shall have a 1/2" radius.
6. For concrete specifications see Section 5 of the Materials and Construction Methods Division of these Standard Specifications.
7. A 4'-6" transition shall be used between different curb types.
8. For new sidewalks less than 5' wide and equal to or greater than 200 ft in length, 5'x5' ADA passing spaces must be provided at 200' intervals within the public RW.

REVISION			
Define ADA Passing Zone	CITY OF WOODLAND COMMUNITY DEVELOPMENT DEPARTMENT ENGINEERING DIVISION	Springlake Vertical Curb, Gutter w/Detached Sidewalk	0301
Revise x-slope	APPROVED BY DATE 03-23-10 BRENT MEYER, CITY ENGINEER		

SCALE : n.t.s.	FILE NAME	spec0302.dwg

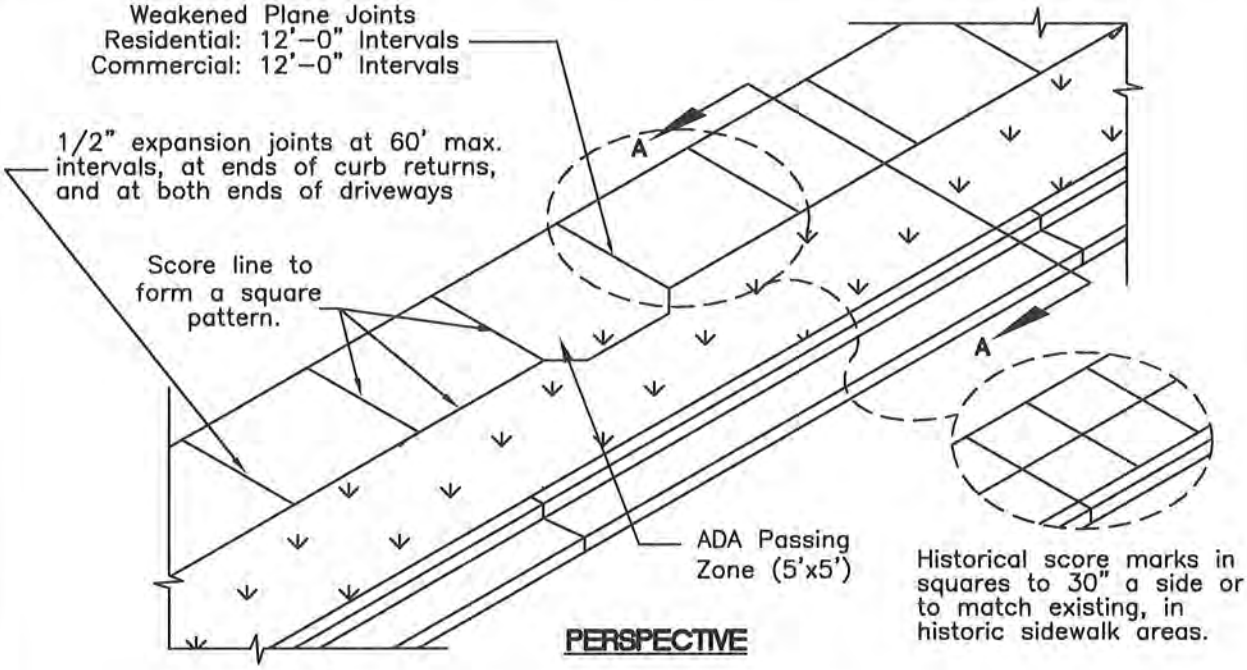

PERSPECTIVE

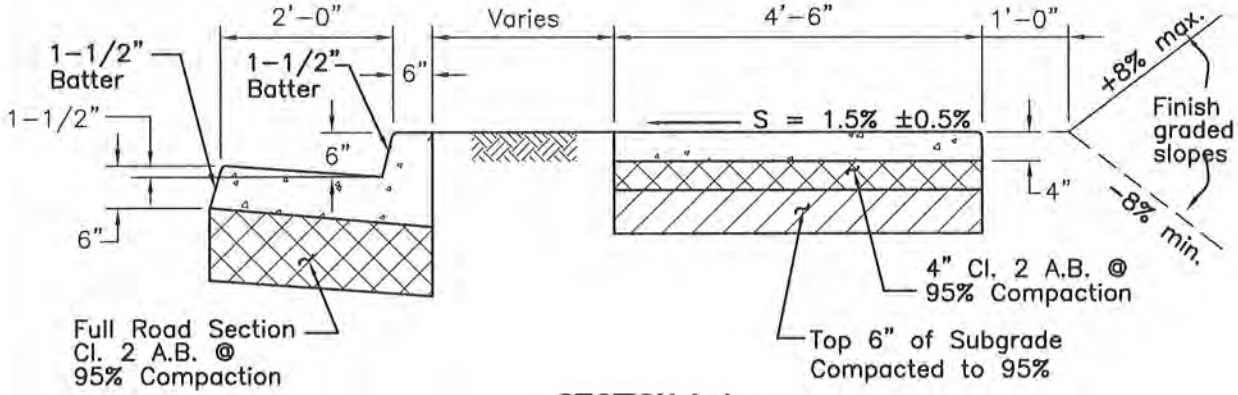

SECTION A-A

NOTES:

1. Score lines shall be 1/4" deep and form a square pattern.
2. Apply light broom finish to surface of walk at right angle with face of curb. Broom finish curb and gutter parallel with street.
3. Backfill behind sidewalk.
4. All curb and gutter shall be poured monolithically.
5. All edges shall have a 1/2" radius.
6. For concrete specifications see Section 5 of the Materials and Construction Methods Division of these Standard Specifications.
7. A 4'-6" transition shall be used between different curb types.
8. For new sidewalks less than 5' wide and equal to or greater than 200 ft in length, 5'x5' ADA passing spaces must be provided at 200' intervals within the public RW.

REVISION			
Define ADA Passing Zone	CITY OF WOODLAND COMMUNITY DEVELOPMENT DEPARTMENT ENGINEERING DIVISION	Vertical Curb, Gutter w/Detached Sidewalk	0302
Revise x-slope	APPROVED BY DATE 03-23-10 BRENT MEYER, CITY ENGINEER		

SCALE : n.t.s.	FILE NAME	spec0305.dwg

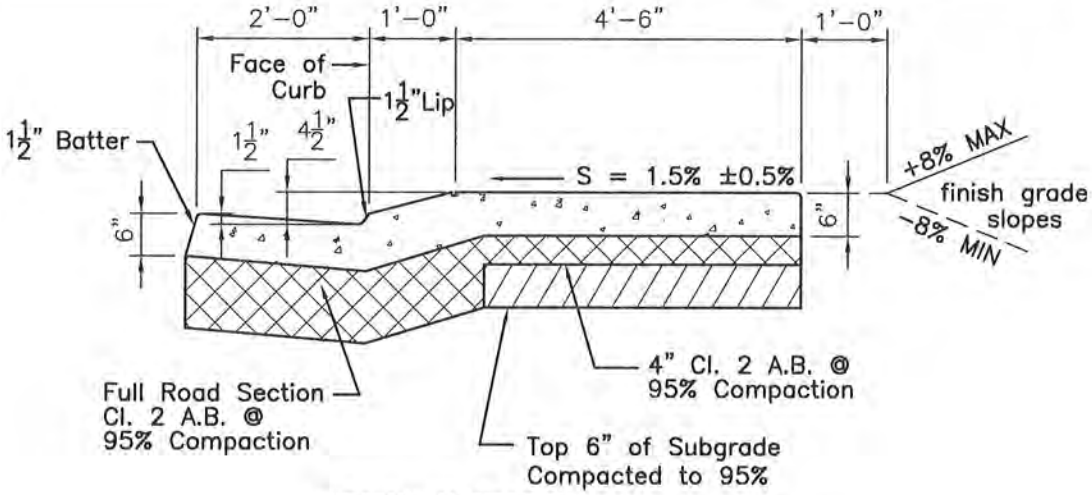

SIDEWALK SECTION

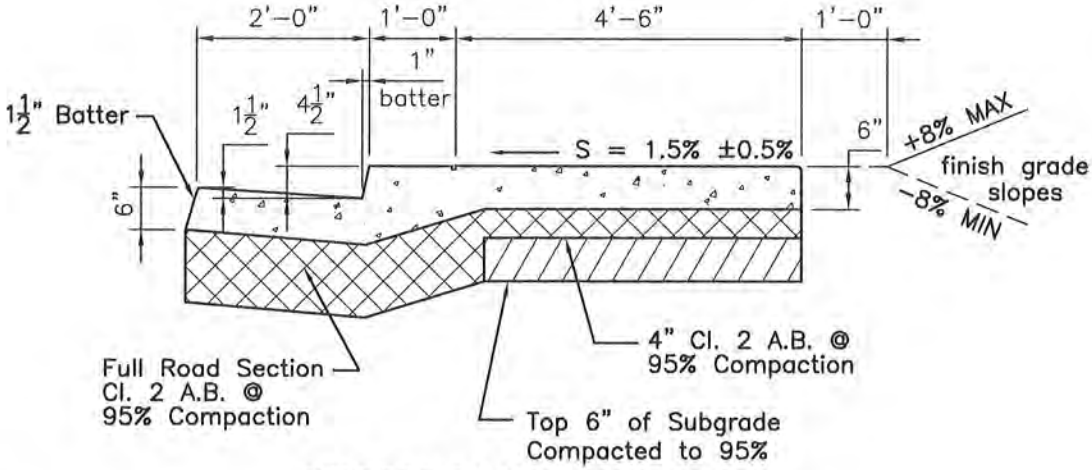

CURB RETURN SECTION

NOTES:

1. Score lines shall be 1/4" deep and form a square pattern.
2. Apply light broom finish to surface of walk at right angle with face of curb. Broom finish curb and gutter parallel with street.
3. Backfill behind sidewalk.
4. All curb and gutter shall be poured monolithically.
5. All edges shall have a 1/2" radius.
6. For concrete specifications see Section 5 of the Materials and Construction Methods Division of these Standard Specifications.
7. A 4'-6" transition shall be used between different curb types.
8. For new sidewalks less than 5' wide and equal to or greater than 200 ft in length, 5'x5' ADA passing spaces must be provided at 200' intervals within the public RW.
9. Provide 1/2" expansion joints at 60' maximum intervals and at ends of curb returns.
10. Weakened plane joints at 12' intervals to match score lines.

REVISION			
Revise ADA Passing Note and x-slope	CITY OF WOODLAND COMMUNITY DEVELOPMENT DEPARTMENT ENGINEERING DIVISION APPROVED BY DATE 03/23/10 BRENT MEYER, CITY ENGINEER	Low Profile Curb, Gutter and Sidewalk	0305

SCALE : n.t.s.	FILE NAME	spec0310.dwg

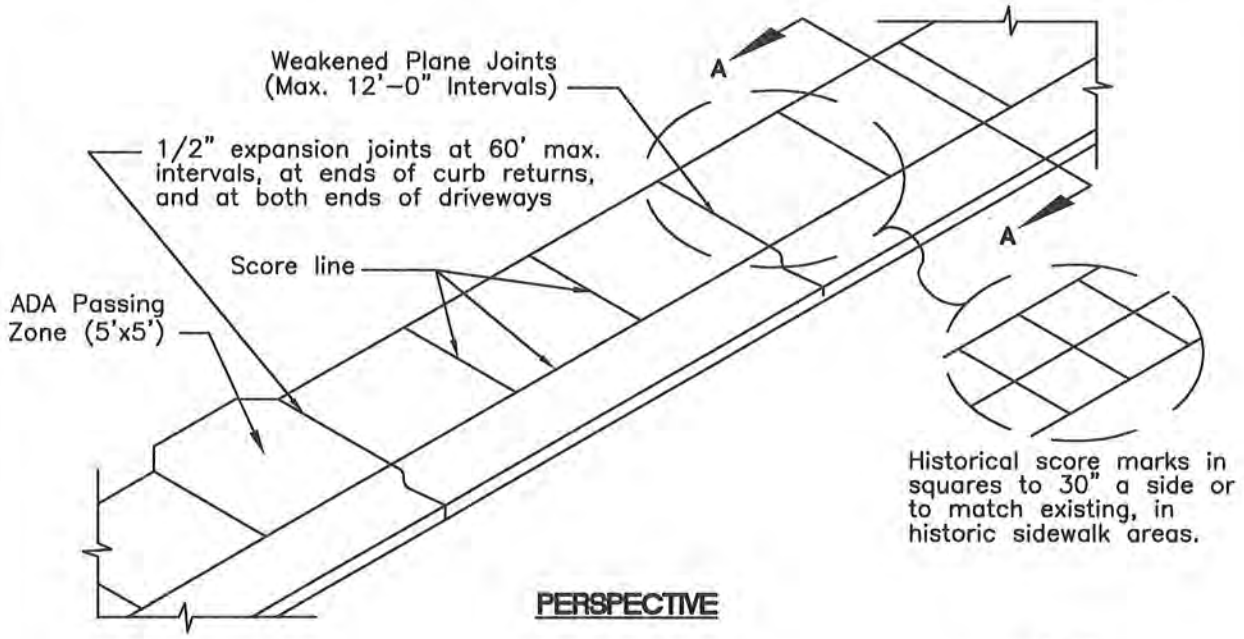

PERSPECTIVE

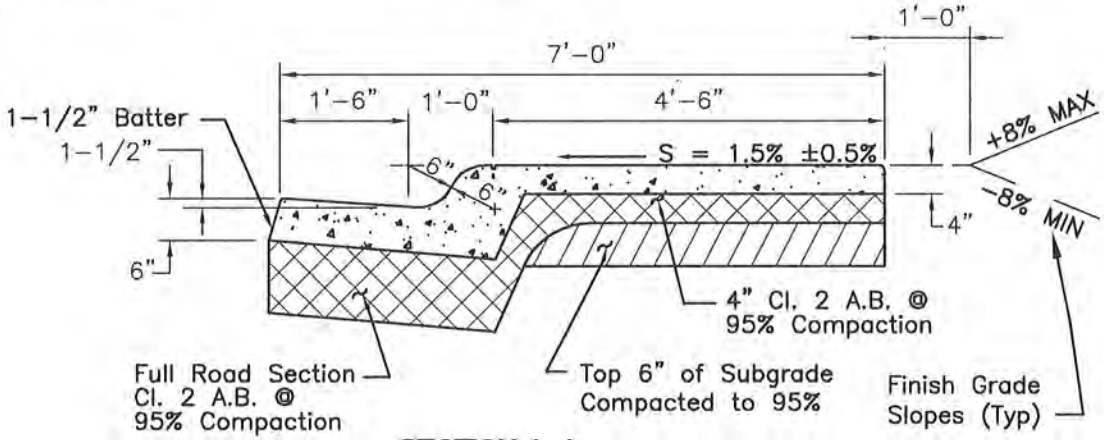

SECTION A-A

NOTES:

1. Score lines shall be 1/4" deep and form a square pattern.
2. Apply light broom finish to surface of walk at right angle with face of curb. Broom finish curb and gutter parallel with street.
3. Backfill behind sidewalk.
4. All sidewalk, curb and gutter shall be poured monolithically.
5. All edges shall have a 1/2" radius.
6. For concrete specifications see Section 5 of the Materials and Construction Methods Division of these Standard Specifications.
7. A 4'-6" transition shall be used between different curb types.
8. For new sidewalks less than 5' wide and equal to or greater than 200 ft in length, 5'x5' ADA passing spaces must be provided at 200' intervals within the public RW.
9. Rolled curb is not permitted at bus stops. For bus stops use vertical curb.

REVISION			
Added Notes 8 & 9	CITY OF WOODLAND COMMUNITY DEVELOPMENT DEPARTMENT ENGINEERING DIVISION	Rolled Curb, Gutter and Sidewalk	0310
Revised x-slope	APPROVED BY: DATE 03/23/10 BRENT MEYER, CITY ENGINEER		

SCALE : n.t.s.	FILE NAME	spec0313.dwg

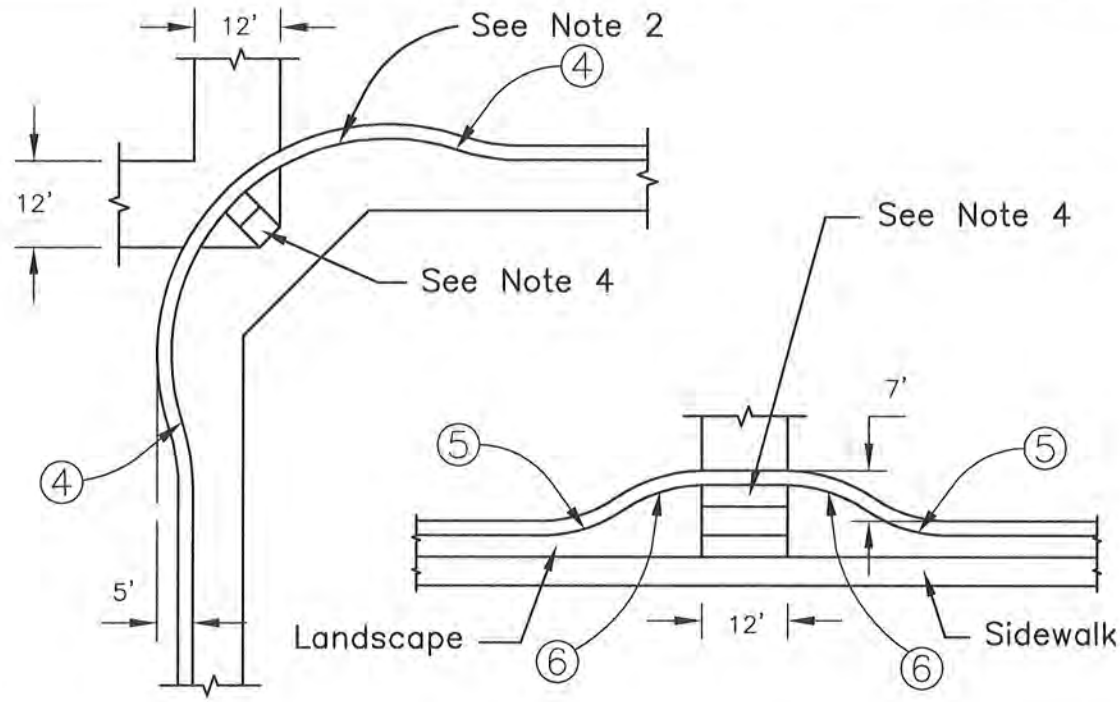

CURB BULB–OUT DETAIL AT END OF BLOCK

GUTTER FLOW CURVE DATA			
CURVE	LENGTH	RADIUS	DELTA
4	9.53	30	18°11'41"

CURB BULB–OUT DETAIL AT MID BLOCK

GUTTER FLOW CURVE DATA			
CURVE	LENGTH	RADIUS	DELTA
5	12.02	20	34°25'23"
6	11.59	20	33°12'51"

NOTES:

1. Apply light broom finish to surface of walk at right angle with street. Broom finish curb and gutter parallel with street.
2. See Engineering Design Standards Section 3.10 to determine radius at face of curb required for curb bulb–out at end of block. For large radius corners, dual ramps may be required.
3. See Section 5, Materials and Construction Methods, for concrete specifications.
4. Curb Ramps shall conform to City Details 0355, 0357 (as appropriate) and to Caltrans Standard Detail A88 (A&B).

REVISION			
Revised Note 4	CITY OF WOODLAND COMMUNITY DEVELOPMENT DEPARTMENT ENGINEERING DIVISION APPROVED BY DATE 03/23/10 BRENT MEYER, CITY ENGINEER	Curb Bulb–Out	0313

SCALE : N.T.S.	FILE NAME	SPEC0315.DWG

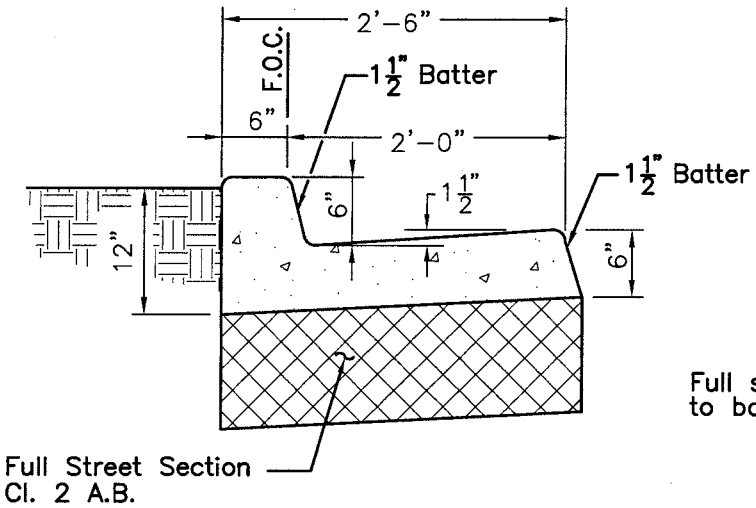

CURB & GUTTER

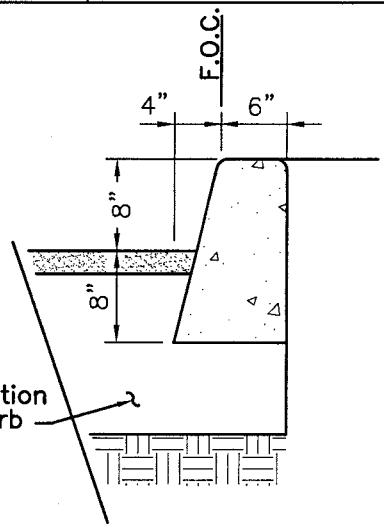

MEDIAN CURB

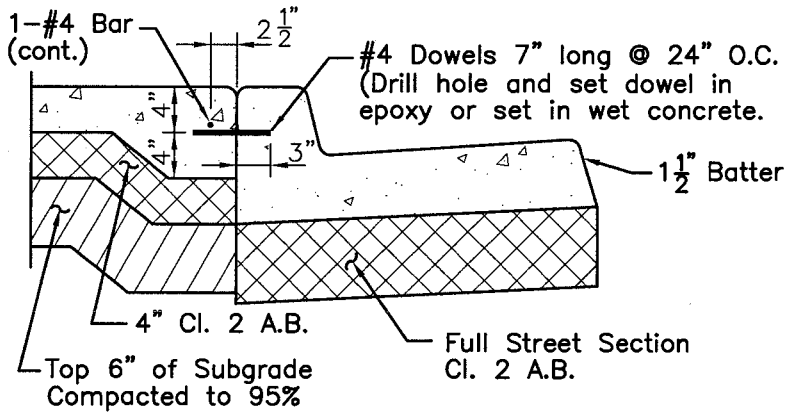

(Doweling shall be required at all locations where new concrete is being poured adjacent to exist. concrete)

STAGE CONSTRUCTION

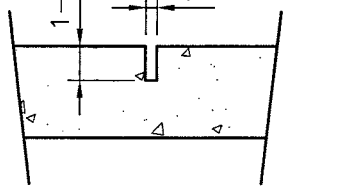

WEAKENED PLANE JOINT

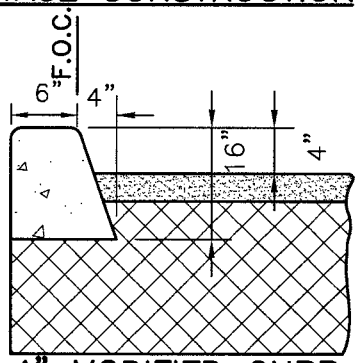

4" MODIFIED CURB

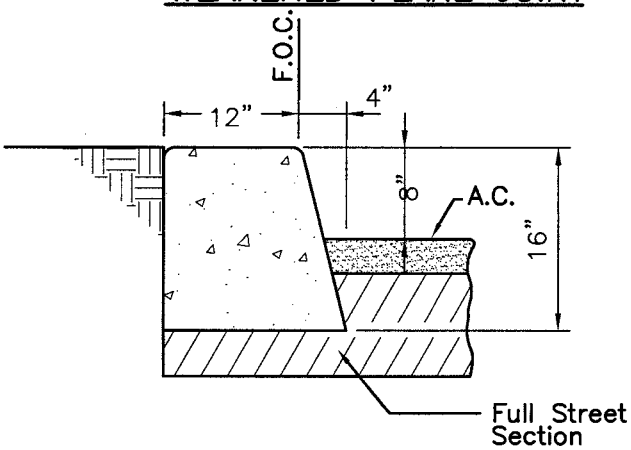

SPECIAL MEDIAN CURB

GENERAL NOTES:

1. All edges shall have 1/2" radius.
2. Apply light broom finish to surface of curb and gutter parallel with street.
3. Weakened plane joint spacing at 12' intervals.
4. 1/2" Expansion Joints at 60' intervals.

NO.	REVISION	BY

CITY OF WOODLAND
PUBLIC WORKS DEPARTMENT
ENGINEERING DIVISION

APPROVED BY
DATE 11/05/07 DICK DONNELLY, CITY ENGINEER

CURB & GUTTER

0315

SCALE : NTS	FILE NAME	spec0316.dwg

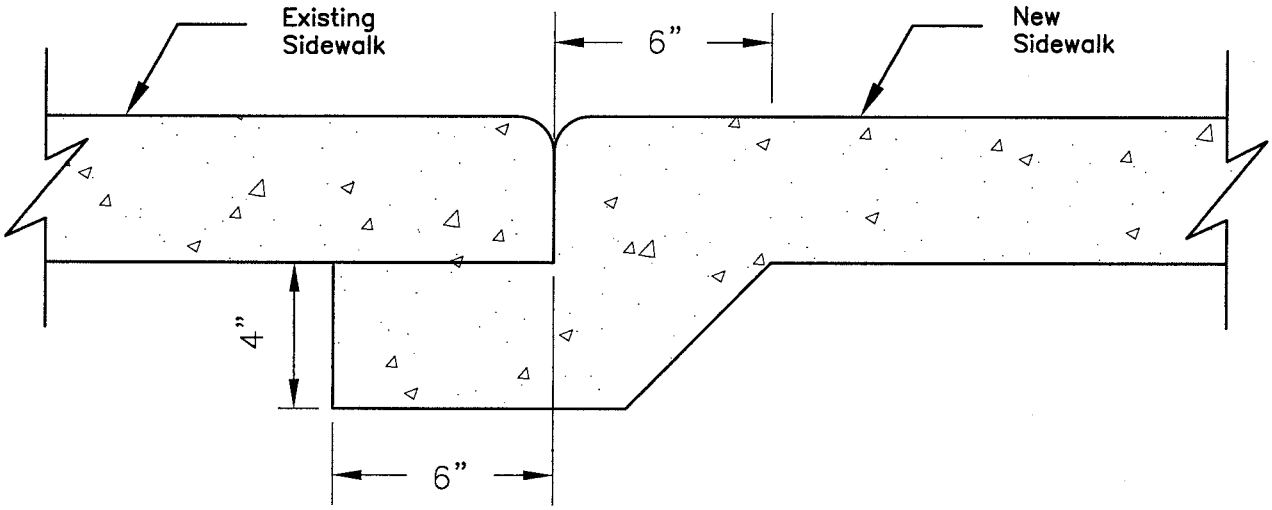

SPECIAL JOINT

(Optional at engineer's discretion)

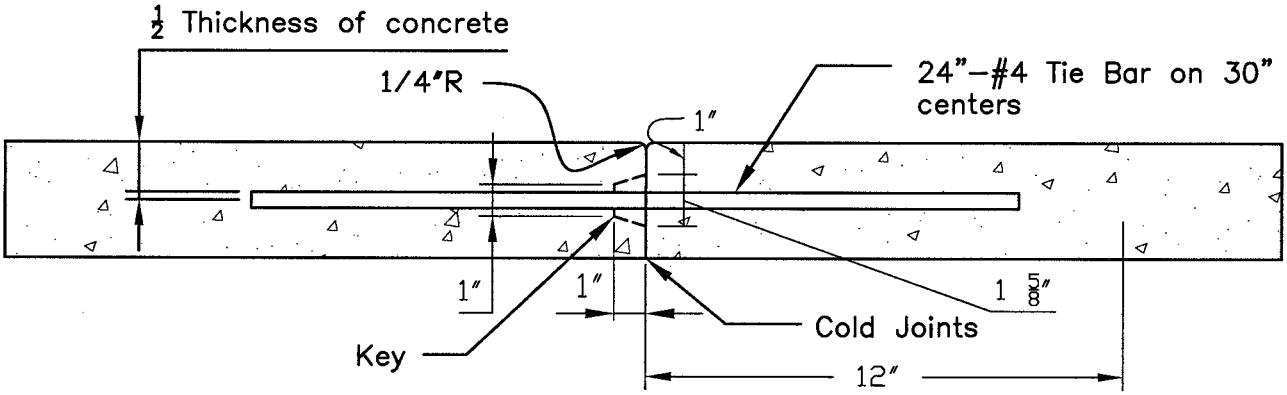

CONSTRUCTION JOINT

(New construction)

NOTES:

1. For concrete specifications see Section 5 of the Materials and Construction Methods Division of these Standard Specifications.
2. Concrete on both sides of construction joints shall be keyed together with tie bars as shown. At the end of sidewalk construction, the engineer may require a key as shown in lieu of tie bars.
3. Construction joints shall be required in curb and gutter, sidewalk, driveway, valley gutter work and wherever new concrete is to be extended in the future.

NO.	REVISION	BY			
			CITY OF WOODLAND PUBLIC WORKS DEPARTMENT ENGINEERING DIVISION APPROVED BY DATE 11/05/07 DICK DONNELLY, CITY ENGINEER	CONSTRUCTION JOINTS	0316

SCALE : n.t.s.	FILE NAME	spec0320.dwg

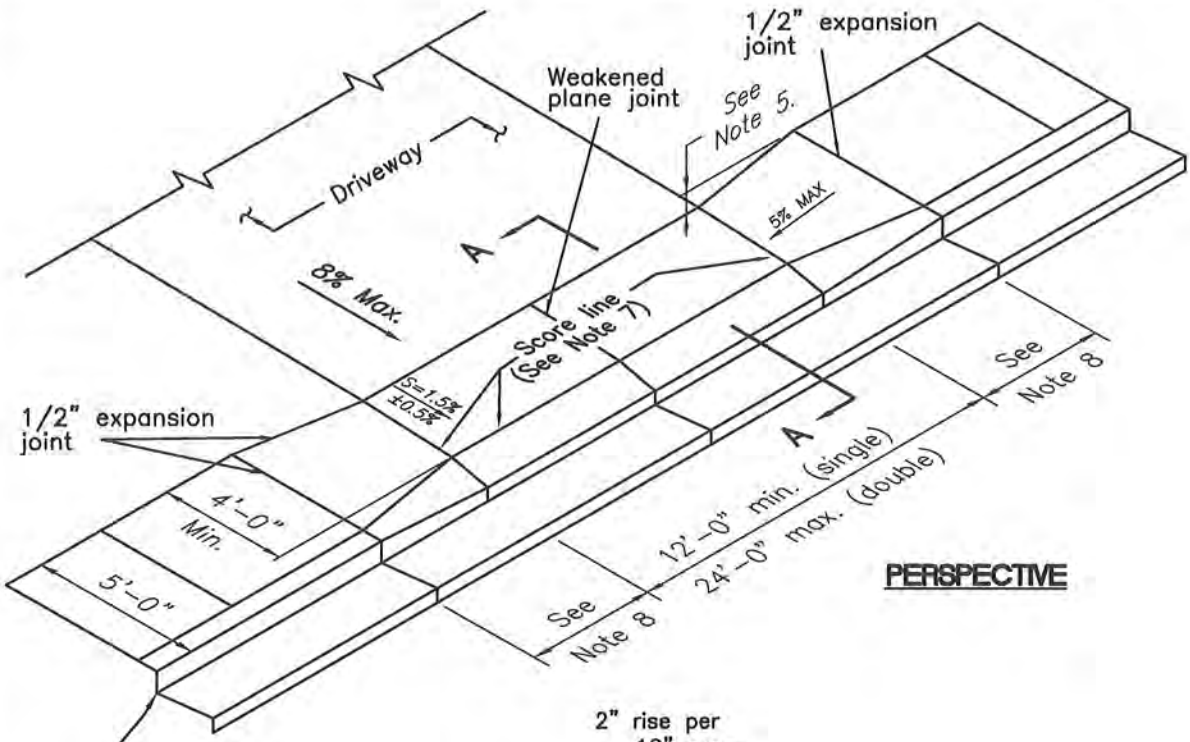

PERSPECTIVE

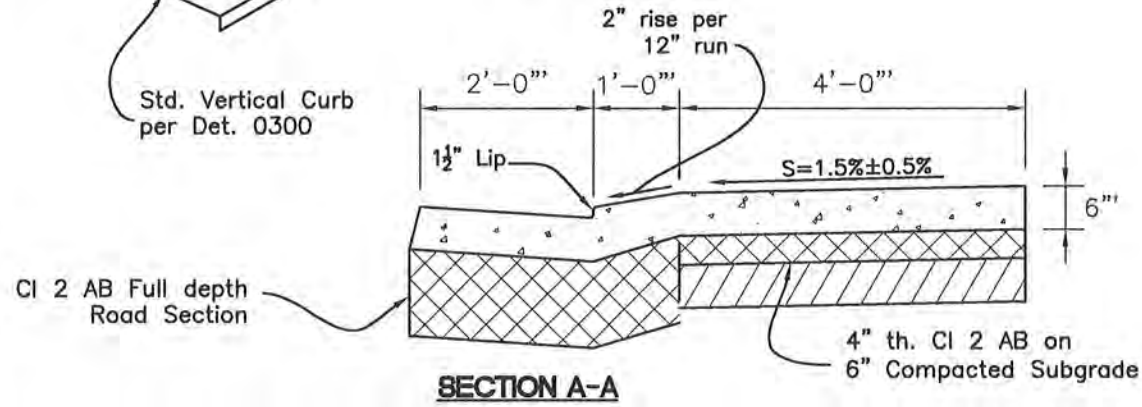

SECTION A-A

NOTES:

1. For concrete specifications see Section 5 of the Materials and Construction Methods Division of these Standard Specifications.
2. Score lines shall be 1/4" deep and form a square pattern.
3. Apply light broom finish to surface of walk at a right angle with the street. Broom finish curb and gutter parallel with street.
4. All edges shall have 1/2" radius.
5. Depress back edge of driveway as required below back edge of normal sidewalk to meet slope constraints.
6. Driveways shall be located to provide at least 5' clearance from all appurtenances such as fire hydrants, utility poles, drainage inlets and underground utilities.
7. Back of curb score line required only in cases when it connects score marks along existing back of curb.
8. Transition distance (Typ. 4'-6") is dependent on field conditions. Increase distance if required so that max. slope in pedestrian direction of travel is 5%.

REVISION	CITY OF WOODLAND COMMUNITY DEVELOPMENT DEPARTMENT ENGINEERING DIVISION	Type "A" Residential Driveway Vertical Curb	0320
Revise Notes Revise x-slope Added Section A-A	APPROVED BY DATE 03/23/10 BRENT MEYER, CITY ENGINEER		

SCALE : n.t.s.	FILE NAME	spec0325.dwg

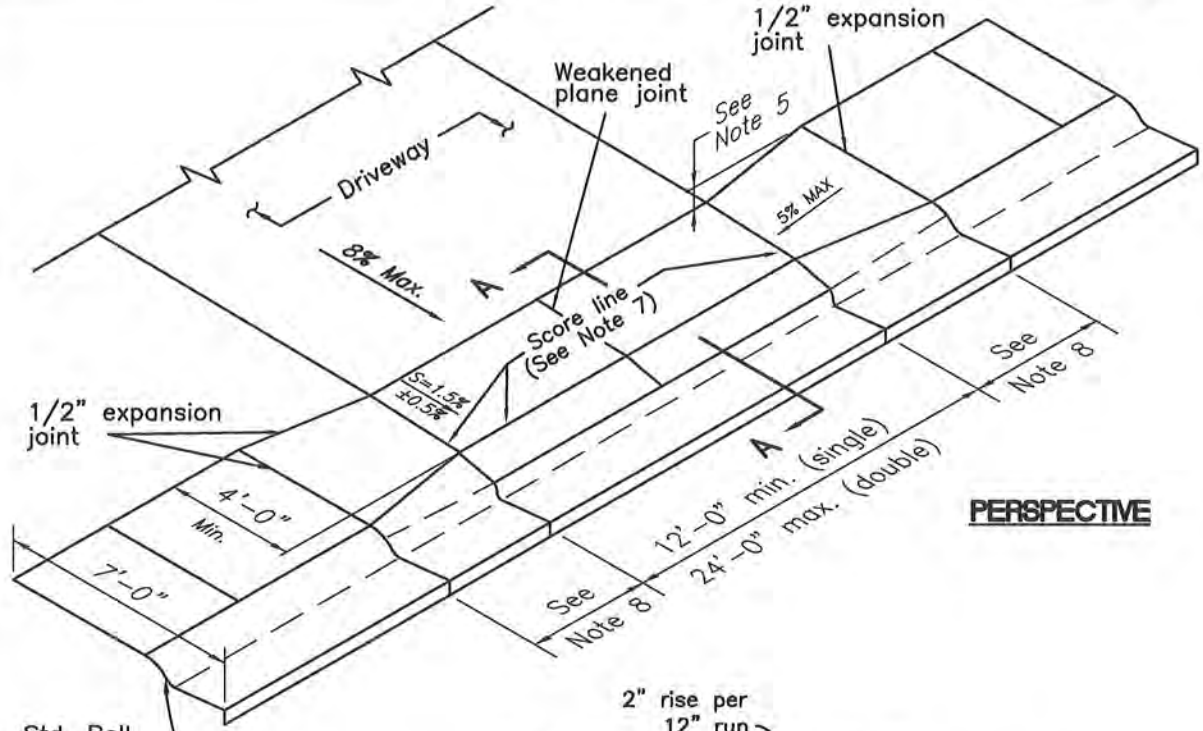

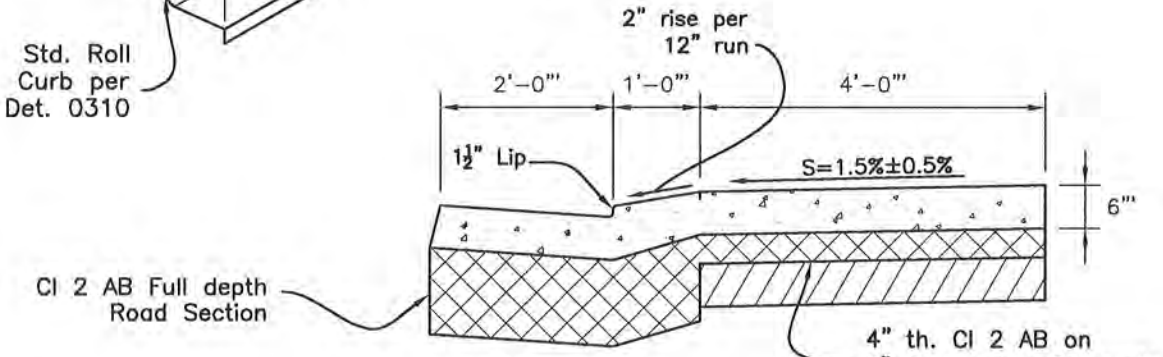

SECTION A-A

NOTES:

1. For concrete specifications see Section 5 of the Materials and Construction Methods Division of these Standard Specifications.
2. Score lines shall be 1/4" deep and form a square pattern.
3. Apply light broom finish to surface of walk at a right angle with the street. Broom finish curb and gutter parallel with street.
4. All edges shall have 1/2" radius.
5. Depress back edge of driveway as required below normal back edge of sidewalk to meet slope constraints.
6. Driveways shall be located to provide at least 5' clearance from all appurtenances such as fire hydrants, utility poles, drainage inlets and underground utilities.
7. Back of curb score line required only in cases when it connects score marks along existing back of curb.
8. Transition distance (Typ. 4'-6") is dependent on field conditions. Increase distance if required so that max. slope in pedestrian direction of travel is 5%.

REVISION	CITY OF WOODLAND COMMUNITY DEVELOPMENT DEPARTMENT ENGINEERING DIVISION	Type "B" Residential Driveway Roll Curb	0325
Revised Notes Revise x-slope Added Section A-A	APPROVED BY DATE 03/23/10 BRENT MEYER, CITY ENGINEER		

SCALE : n.t.s.	FILE NAME	spec0330.dwg

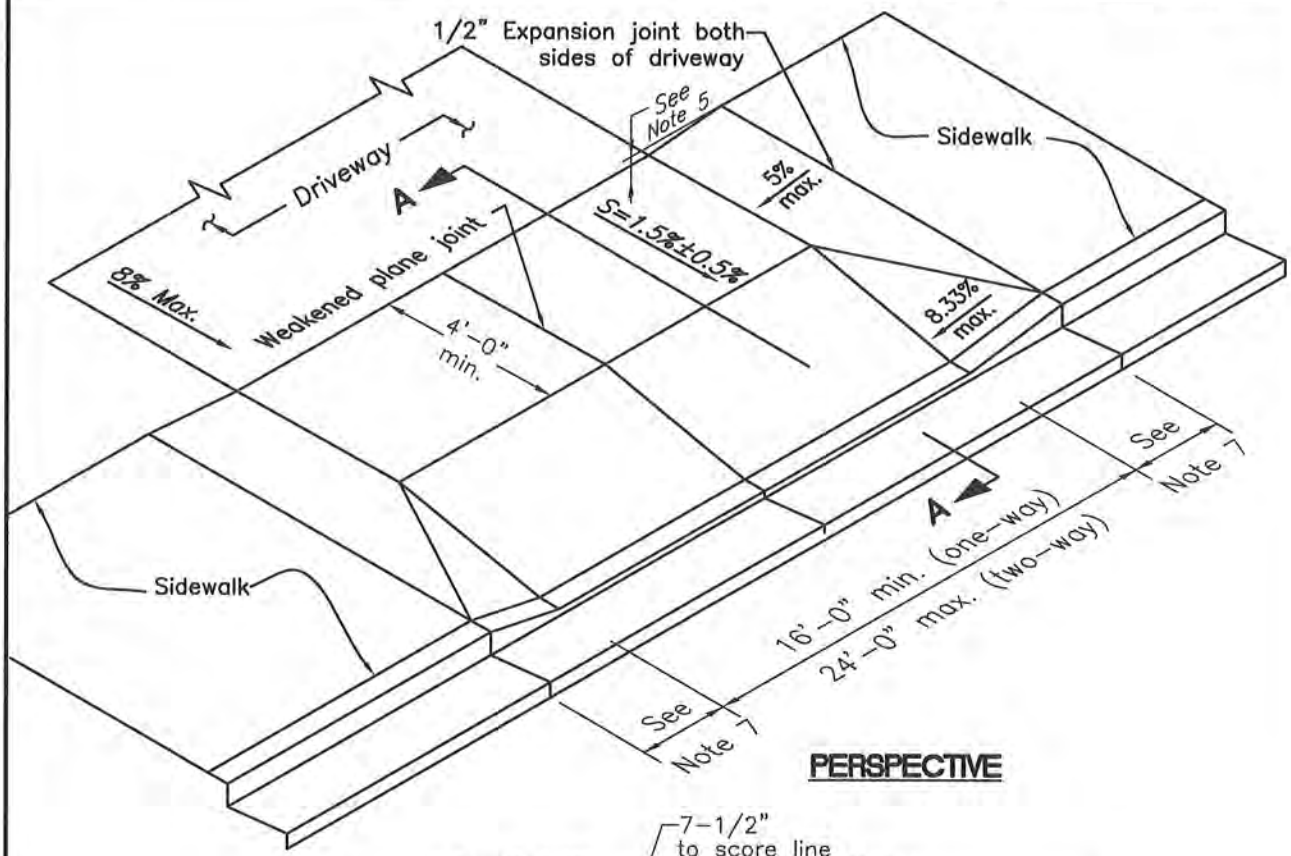

PERSPECTIVE

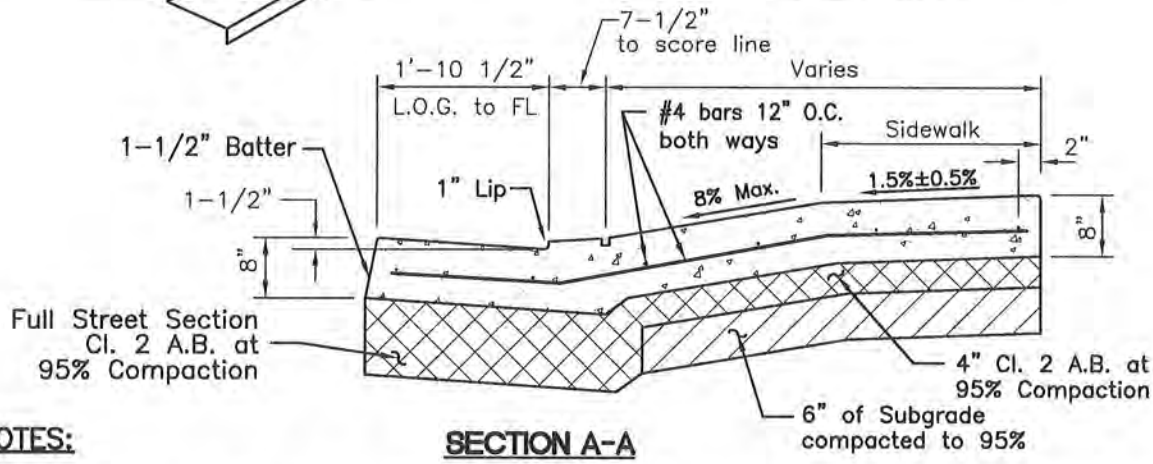

SECTION A-A

NOTES:

1. For concrete specifications see Section 5 of the Materials and Construction Methods Division of these Standard Specifications.
2. Score lines shall be 1/4" deep and form a square pattern.
3. Apply light broom finish to surface of walk at a right angle with the street. Broom finish curb and gutter parallel with street.
4. All edges shall have 1/2" radius.
5. Depress back edge of driveway as required below back edge of normal sidewalk to meet slope constraints.
6. Driveways shall be located to provide at least 5' clearance from all appurtenances such as fire hydrants, utility poles, drainage inlets and underground utilities.
7. Transition distance (3. min.) is dependent on field conditions. Increase distance so that max. slope of sidewalk in pedestrian direction of travel is 5%.

REVISION	CITY OF WOODLAND COMMUNITY DEVELOPMENT DEPARTMENT ENGINEERING DIVISION	Type "C" Commercial Driveway	0330
Revised Notes Revised x-slope	APPROVED BY: DATE 03/23/10 BRENT MEYER, CITY ENGINEER		

SCALE : n.t.s.	FILE NAME	spec0331.dwg

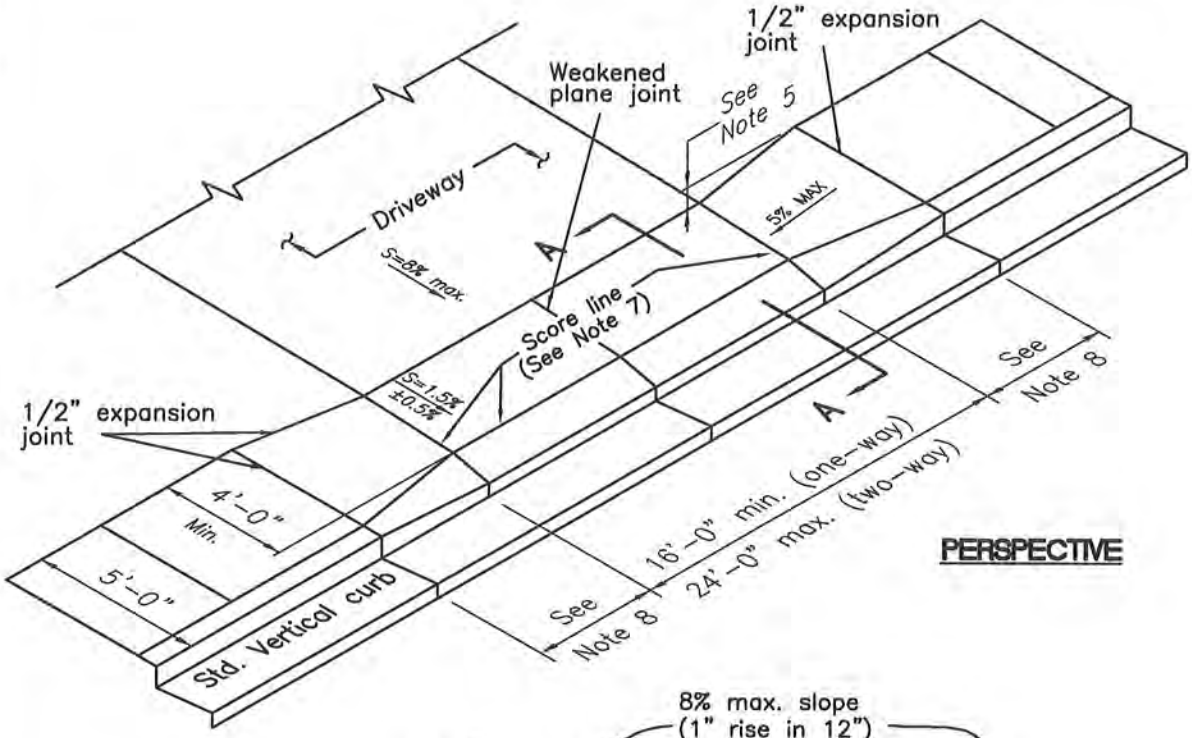

PERSPECTIVE

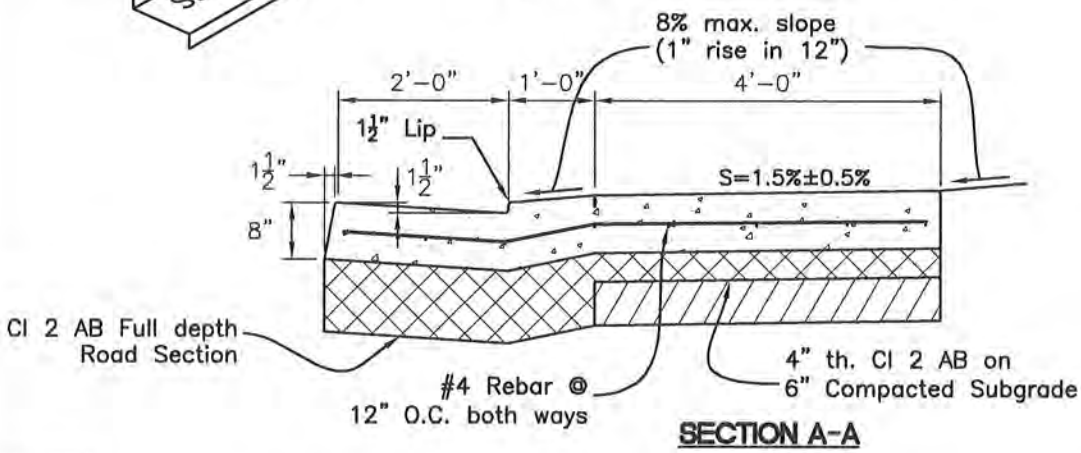

SECTION A-A

NOTES:

1. For concrete specifications see Section 5 of the Materials and Construction Methods Division of these Standard Specifications.
2. Score lines shall be 1/4" deep and form a square pattern.
3. Apply light broom finish to surface of walk at a right angle with the street. Broom finish curb and gutter parallel with street.
4. All edges shall have 1/2" radius.
5. Depress back edge of driveway as required below normal back edge of sidewalk to meet slope constraints.
6. Driveways shall be located to provide at least 5' clearance from all appurtenances such as fire hydrants, utility poles, drainage inlets and underground utilities.
7. Back of curb score line required only in cases when it connects score marks along existing back of curb.
8. Transition distance is dependent on field conditions. Varies from 5.8' (6" curb) to 9.2' (8" curb). Max slope of sidewalk in pedestrian direction of travel is 5%.

REVISION	CITY OF WOODLAND COMMUNITY DEVELOPMENT DEPARTMENT ENGINEERING DIVISION	Type "C" (5 feet) Commercial Driveway	0331
Revised Notes Revised slopes	APPROVED BY DATE 03/23/10 BRENT MEYER, CITY ENGINEER		

SCALE : n.t.s.	FILE NAME	spec0332.dwg

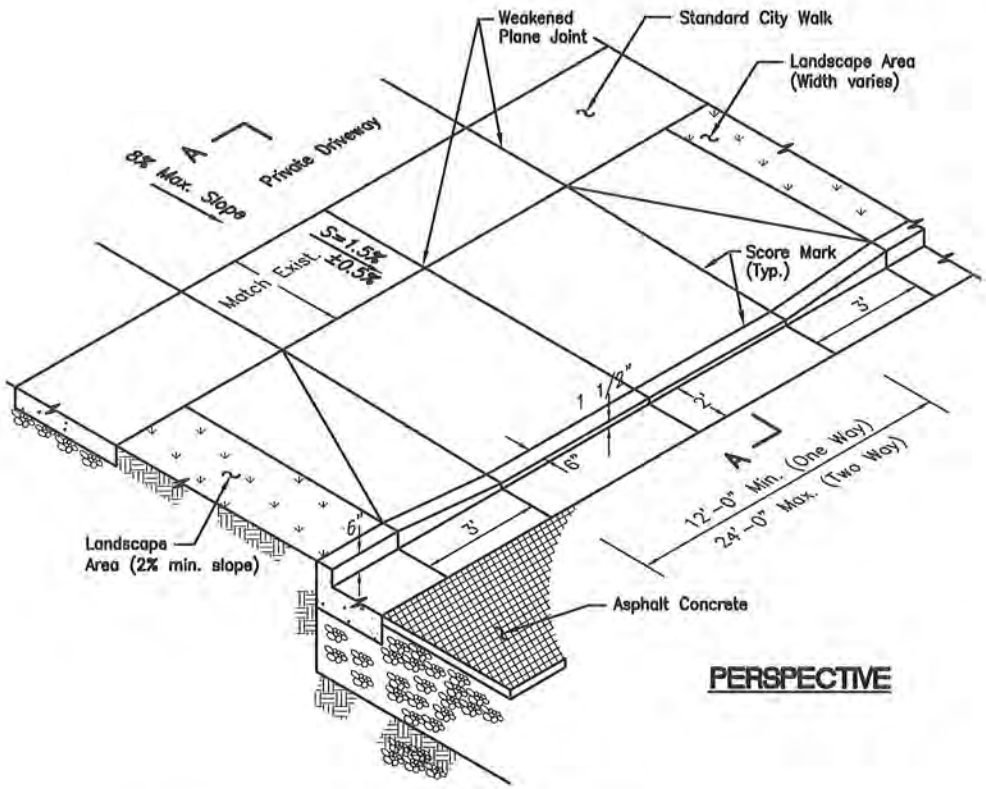

PERSPECTIVE

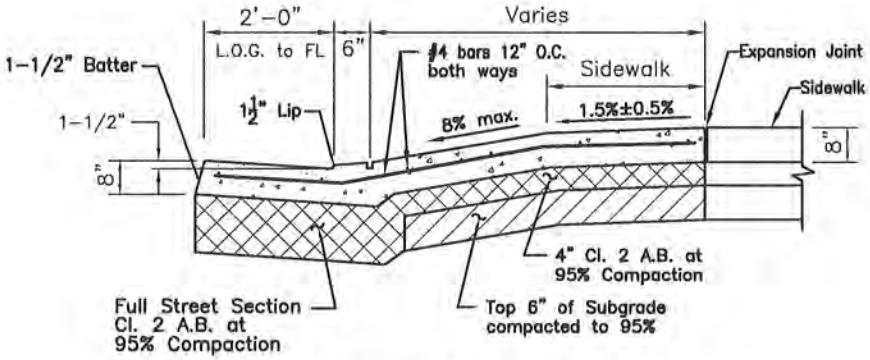

SECTION A-A

NOTES

1. For concrete specifications, see Section 5, Material and Construction Methods.
2. Score lines shall be ¼" deep and form a square pattern.
3. Apply light broom finish to surface of walk at a right angle to face of curb. Broom finish curb and gutter parallel with street.
4. All edges shall have ½" radius.
5. Depression from projected back of walk to top back of driveway shall be 2" for an 8' walk or 10' walk.
6. Driveways shall be located to provide at least 5' clearance to all adjacent above ground structures.

REVISION			
Revise x-slopes	CITY OF WOODLAND COMMUNITY DEVELOPMENT DEPARTMENT ENGINEERING DIVISION APPROVED BY DATE 03/23/10 BRENT MEYER, CITY ENGINEER	Commercial Driveway with Curb and Gutter Separate from Sidewalk	0332

SCALE : n.t.s.	FILE NAME	spec0333.dwg

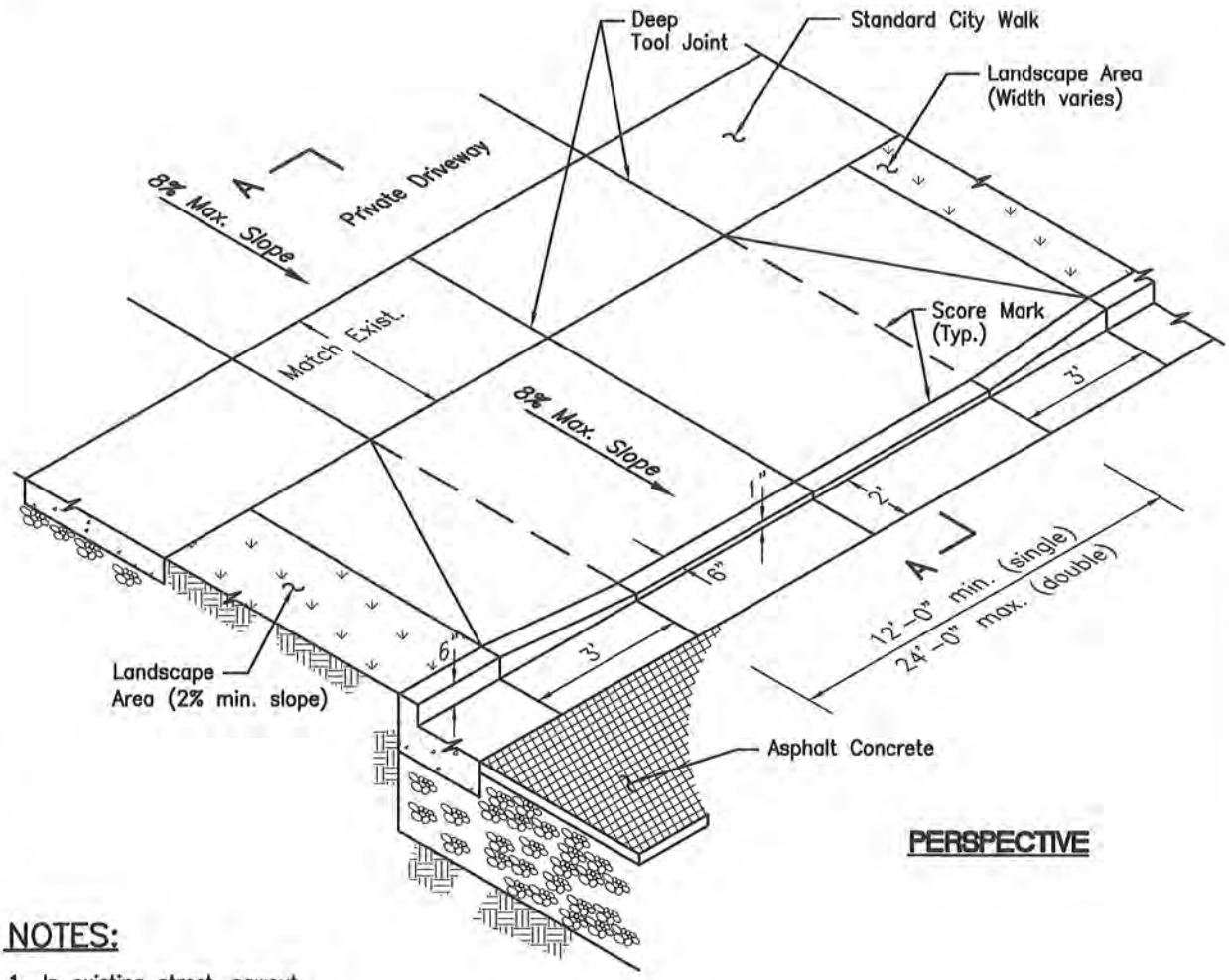

PERSPECTIVE

NOTES:

1. In existing street, sawcut and remove 2' min. width of asphalt concrete adjacent to the gutter.
2. Deep tool joints shall be no more than 12 feet O.C.
3. For concrete specifications see Section 5 of the Materials and Construction Methods Division of these Standard Specifications
4. All edges shall have a 1/2" radius.
5. Driveways shall be located to provide at least 5' clearance from all appurtenances such as fire hydrants, utility poles, underground utilities and drainage inlets.

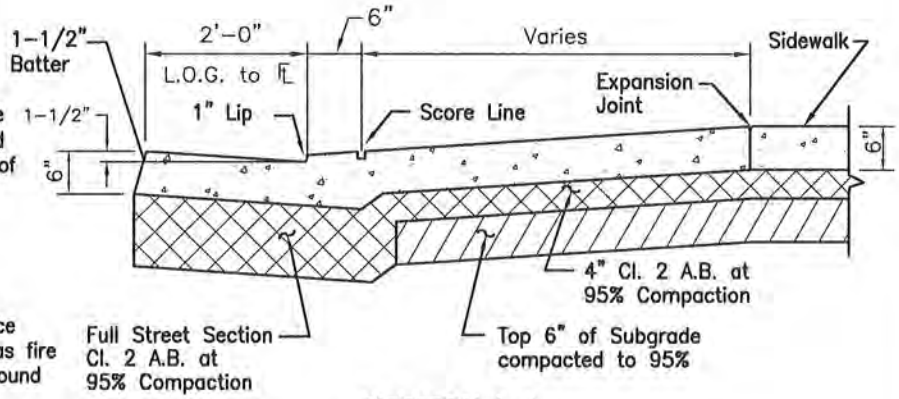

SECTION A-A

REVISION			
Minor Edits	CITY OF WOODLAND COMMUNITY DEVELOPMENT DEPARTMENT ENGINEERING DIVISION APPROVED BY DATE 03/23/10 BRENT MEYER, CITY ENGINEER	Residential Driveway with Curb and Gutter Seperate from Sidewalk	0333

SCALE : n.t.s.	FILE NAME	spec0335.dwg

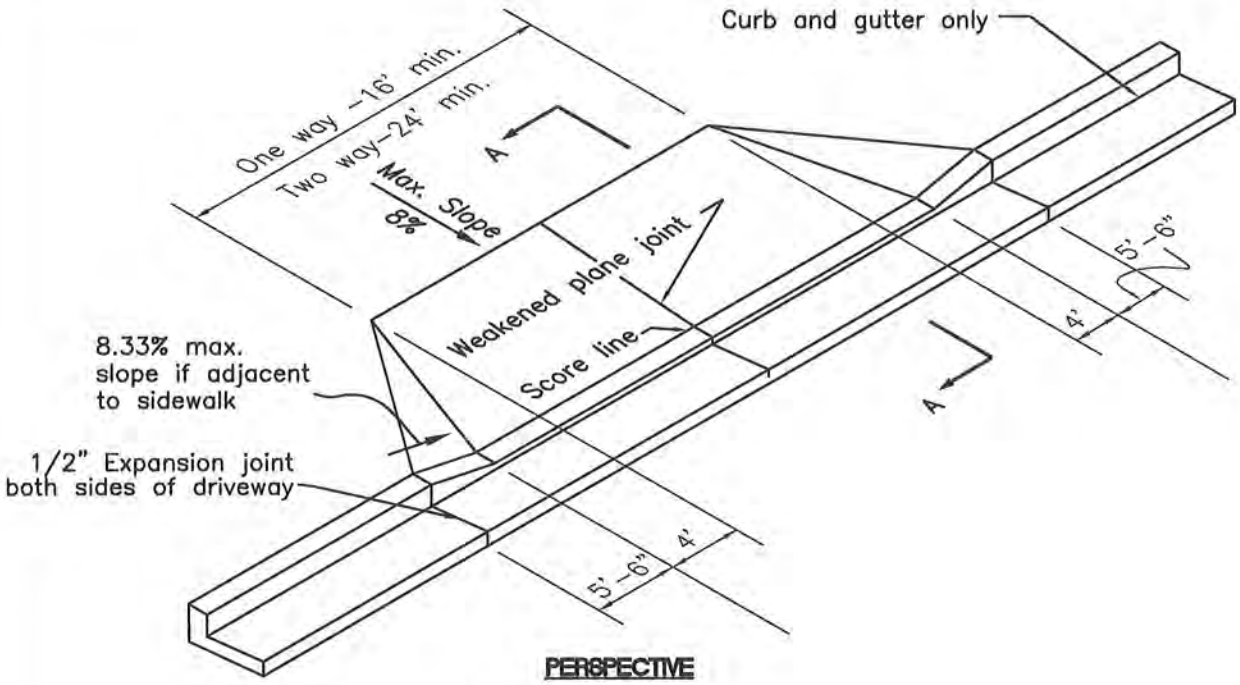

PERSPECTIVE

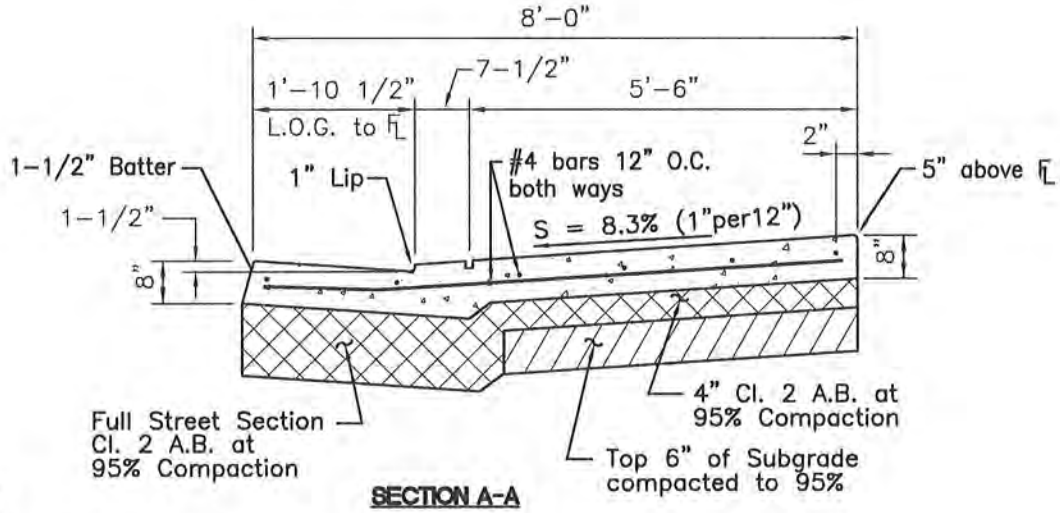

SECTION A-A

NOTES:

1. For concrete specifications see Section 5 of the Materials and Construction Methods of these Standard Specifications
2. Score lines shall be 1/4" deep.
3. Apply light broom finish to surface of driveway at a right angle with the face of curb. Broom finish curb and gutter parallel with street.
4. All edges shall have 1/2" radius.
5. Driveways shall be located to provide at least 5' clearance from all appurtenances such as fire hydrants, utility poles, underground utilities and drainage inlets.

REVISION			
Add 8% max slope	CITY OF WOODLAND COMMUNITY DEVELOPMENT DEPARTMENT ENGINEERING DIVISION APPROVED BY DATE 03/23/10 BRENT MEYER, CITY ENGINEER	Type "D" Industrial Driveway	0335

SCALE :	FILE NAME	spec0340.dwg

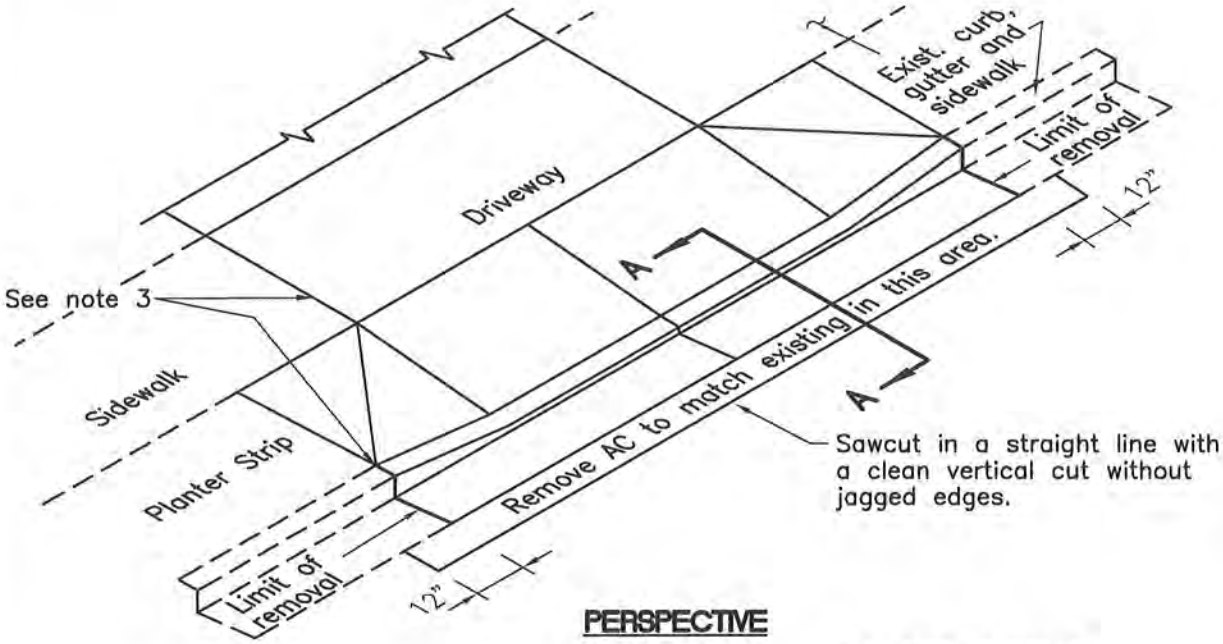

PERSPECTIVE

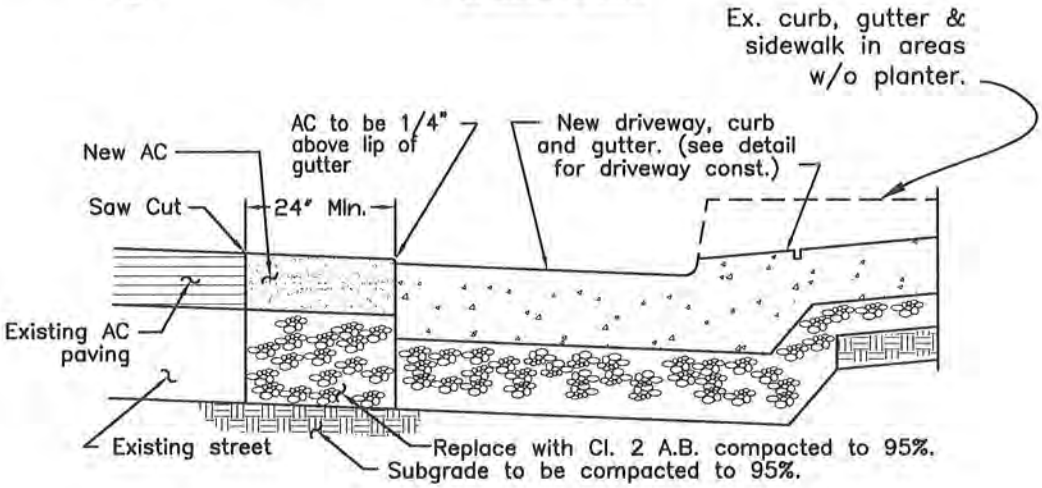

SECTION A-A

NOTES

1. When repairing curb ramps, the AC x-slope shall not exceed 5%, and for new construction the AC x-slope shall not exceed 2%.
2. Remove to existing joint or sawcut full depth.
3. Place #4 dowels (10") drilled into existing concrete at 24" o.c. all around.

REVISION	CITY OF WOODLAND COMMUNITY DEVELOPMENT DEPARTMENT ENGINEERING DIVISION	Retrofit Conforms at Driveway or Curb and Gutter	0340
Revise Notes Delete dowel detail	APPROVED BY DATE 03/23/16 BRENT MEYER, CITY ENGINEER		

SCALE : n.t.s.	FILE NAME	spec0341.dwg

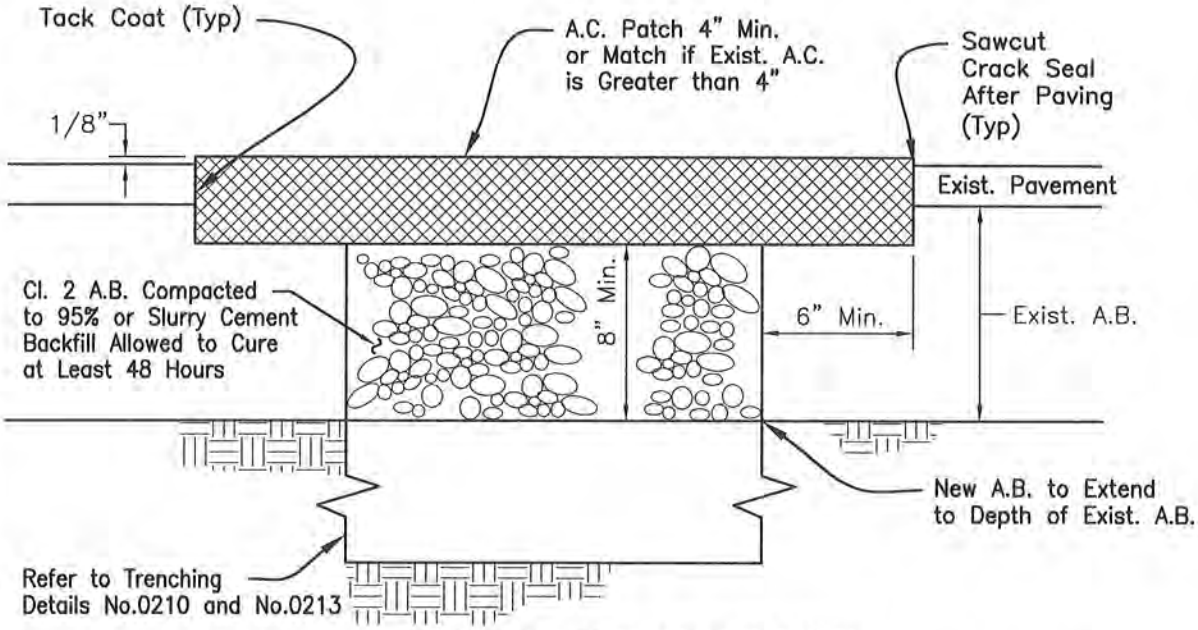

TYPICAL TRENCH PAVEMENT PATCH

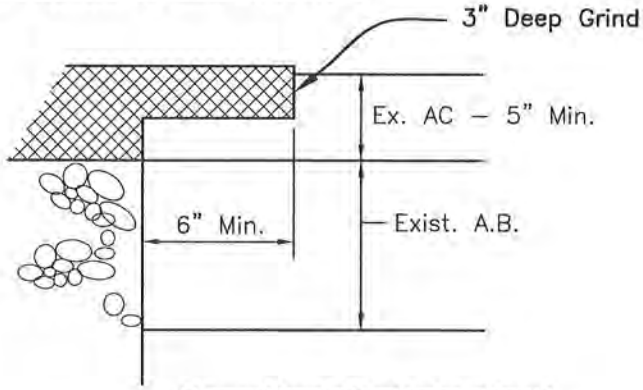

ALTERNATE PAVEMENT PATCH

NOTES:

1. Aggregate base per City of Woodland Standard Specifications.
2. Asphalt concrete per City of Woodland Standard Specifications.
3. A two axle tandem roller shall be used for compaction of A.C.. Hand operated compactors used for compaction shall be approved by the City Engineer prior to any permanent patch paving.
4. Saw cut to be made after trench backfill is completed.

REVISION			
Added Alternate	CITY OF WOODLAND COMMUNITY DEVELOPMENT DEPARTMENT ENGINEERING DIVISION APPROVED BY DATE 03/23/10 BRENT MEYER, CITY ENGINEER	Permanent Patch in Existing Street	0341

SCALE : n.t.s.	FILE NAME	spec0342.dwg

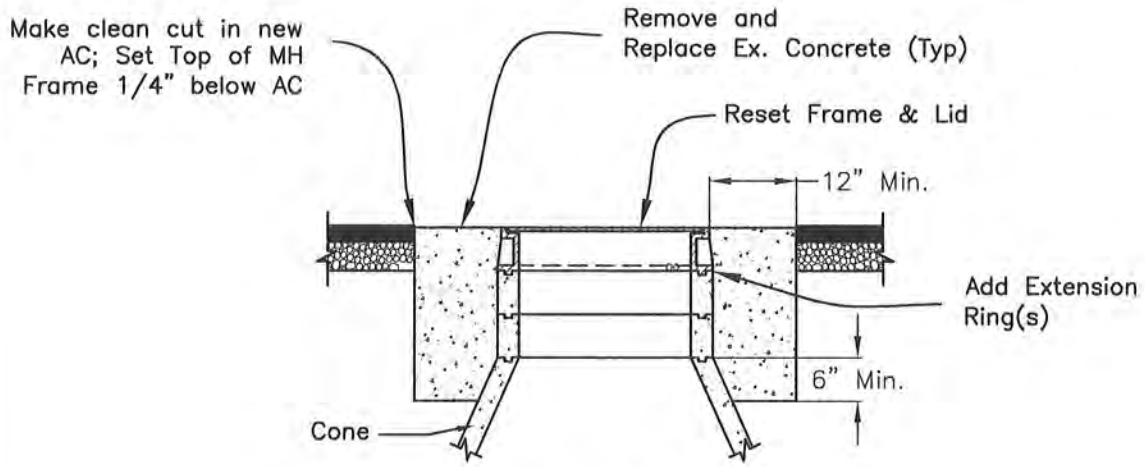

MANHOLES

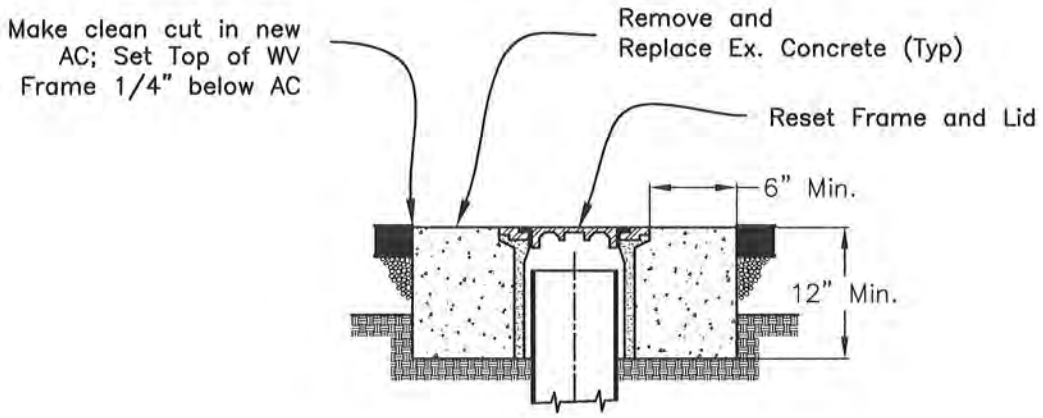

BOXES - MONUMENT, VALVE, ETC.

NOTES:

1. This detail applies to any existing utility structure whether City or Private Utility.
2. See Section 5, Materials and Construction Methods, for concrete requirements.

REVISION			
Clarify annotations	CITY OF WOODLAND COMMUNITY DEVELOPMENT DEPARTMENT ENGINEERING DIVISION APPROVED BY DATE 03/23/10 BRENT MEYER, CITY ENGINEER	Re–Setting Ex. Utility Structures after Re–Paving Work	0342

SCALE : n.t.s.	FILE NAME	spec0343.dwg

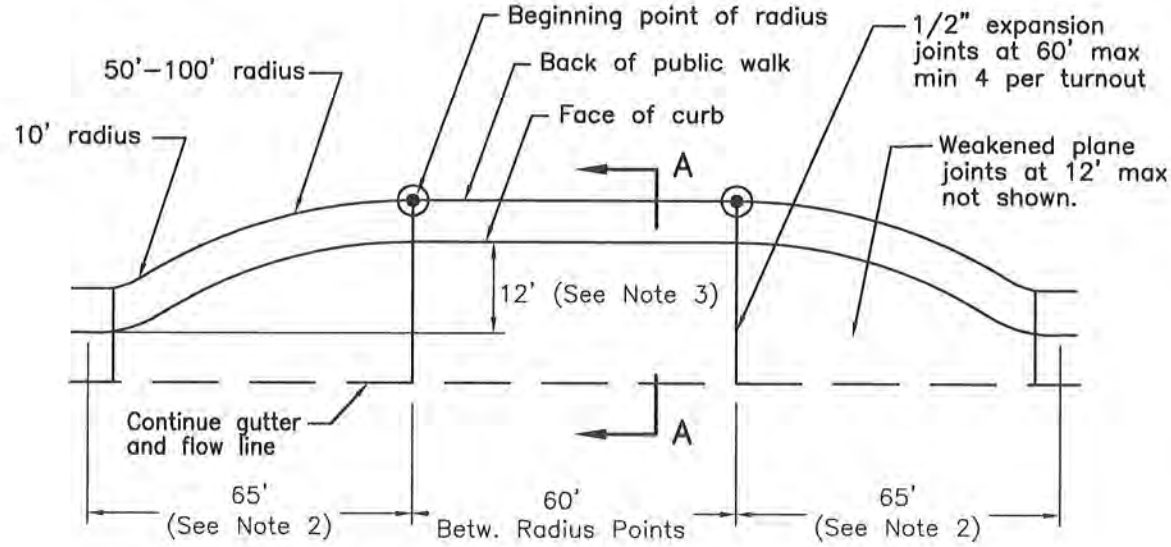

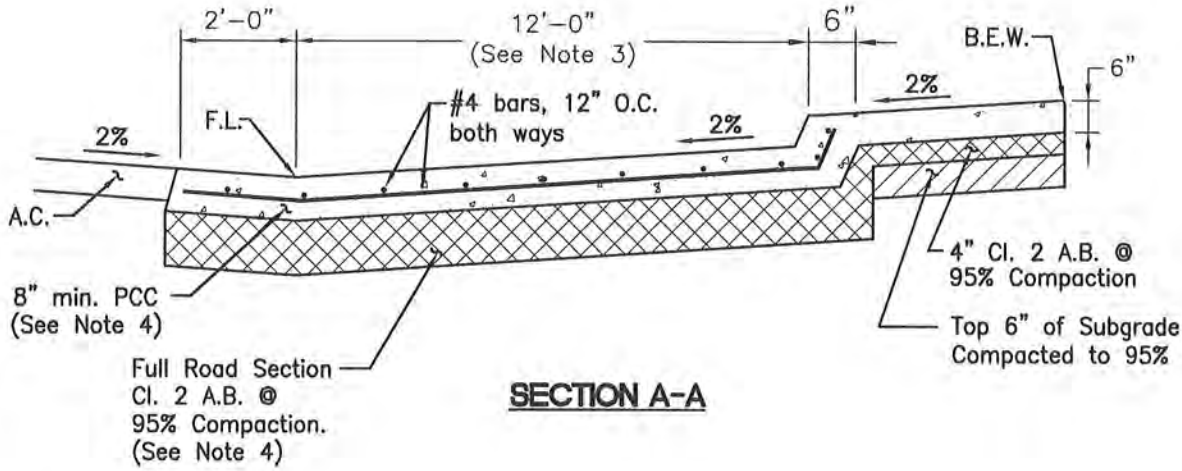

SECTION A-A

NOTES:

1. See Section 5, Materials and Construction Methods, for concrete specifications.
2. Where lower operating speeds and volumes are experienced, may be reduced to 45'.
3. Where lower operating speeds and volumes are experienced, may be reduced to 10'.
4. Road section to be based on Soils Report recommendations. Design dimensions apply to all situations; whether near–side, far–side or mid–block.
5. See Detail 1200 for bus shelter pad requirements.

REVISION	CITY OF WOODLAND COMMUNITY DEVELOPMENT DEPARTMENT ENGINEERING DIVISION	Bus Turn–out	0343
Revise sidewalk x–slope	APPROVED BY DATE 03/23/10 BRENT MEYER, CITY ENGINEER		

SCALE : N.T.S.	FILE NAME	SPEC0345.DWG

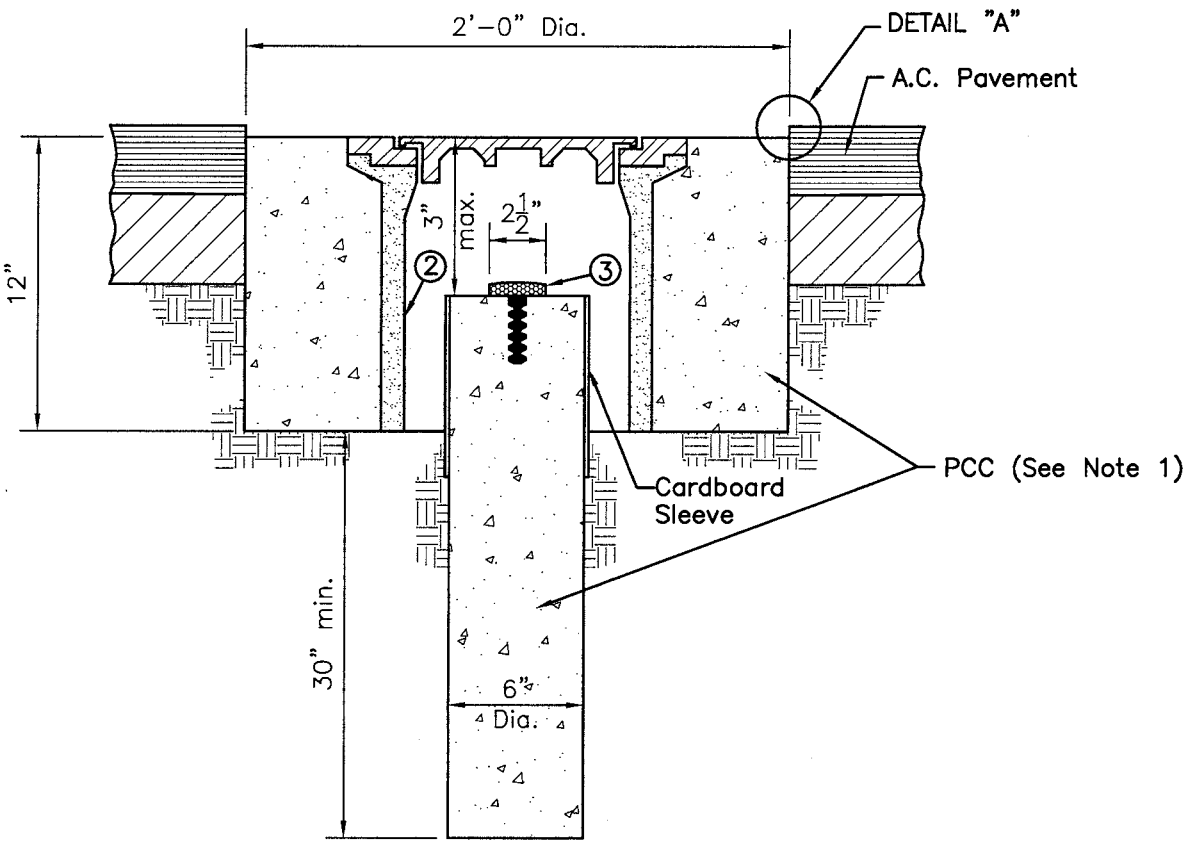

MONUMENT CROSS SECTION

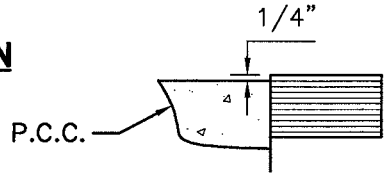

DETAIL A

NOTES

1. For concrete specifications see Section 5 of the Materials and Construction Methods Division of these Standard Specifications.
2. Monument frame & cover shall be Christy G5 Traffic Valve Box or approved equal. Lid to be marked "MONUMENT".
3. Survey marker shall be Lietz 8134-16, Service Co. 287-C or approved equal.
4. The R.E. or L.S. number must appear on the survey marker.
5. Mark reference point with a "+".

NO.	REVISION	BY

CITY OF WOODLAND
PUBLIC WORKS DEPARTMENT
ENGINEERING DIVISION

APPROVED BY
DATE 11/05/07 DICK DONNELLY, CITY ENGINEER

STREET MONUMENT

0345

SCALE : N.T.S.	FILE NAME	SPEC0346.DWG

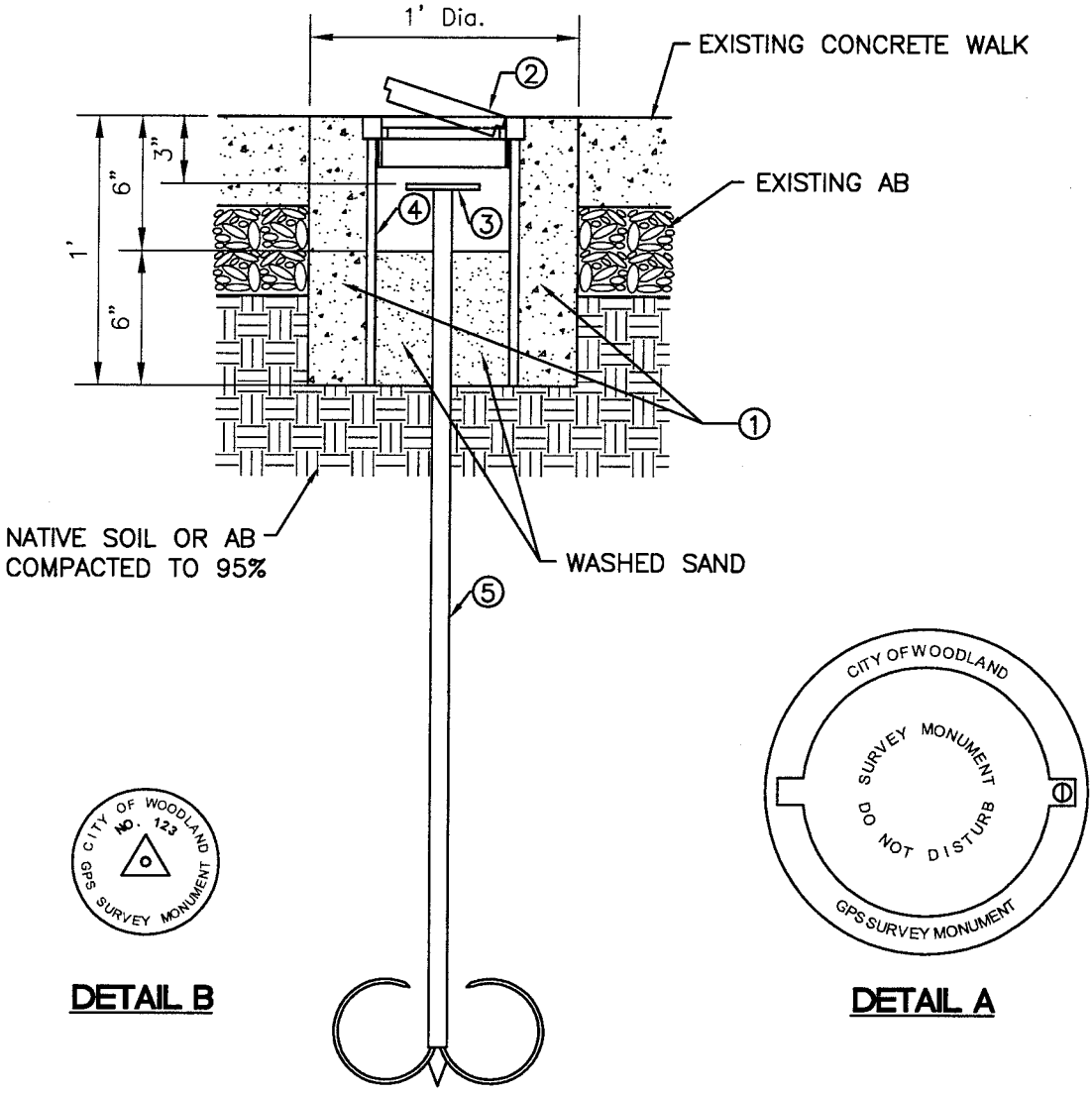

DETAIL B

DETAIL A

MONUMENT CROSS SECTION

NOTES

1. For concrete specifications see Section 5 of the Materials and Construction Methods Division of these Standard Specifications.
2. Benchmark access cover shall be Berntsen BMAC6 TAMP. Cover shall be marked as indicated on detail A.
3. Survey marker Cap shall be 2" Bronze cap for 1000mm FENO Spike. Cap shall be marked as indicated on detail B.
4. 6" Dia. Sch. 40 PVC.
5. 1000mm FENO Driveable Anchored Survey Marker Spike.

CONTROL NETWORK MONUMENT DETAIL

NO.	REVISION	BY			
			CITY OF WOODLAND PUBLIC WORKS DEPARTMENT ENGINEERING DIVISION APPROVED BY DATE 11/05/07 CITY ENGINEER	CONTROL NETWORK MONUMENT FOR WALKWAYS	0346

SCALE : N.T.S.	FILE NAME	SPEC0347.DWG

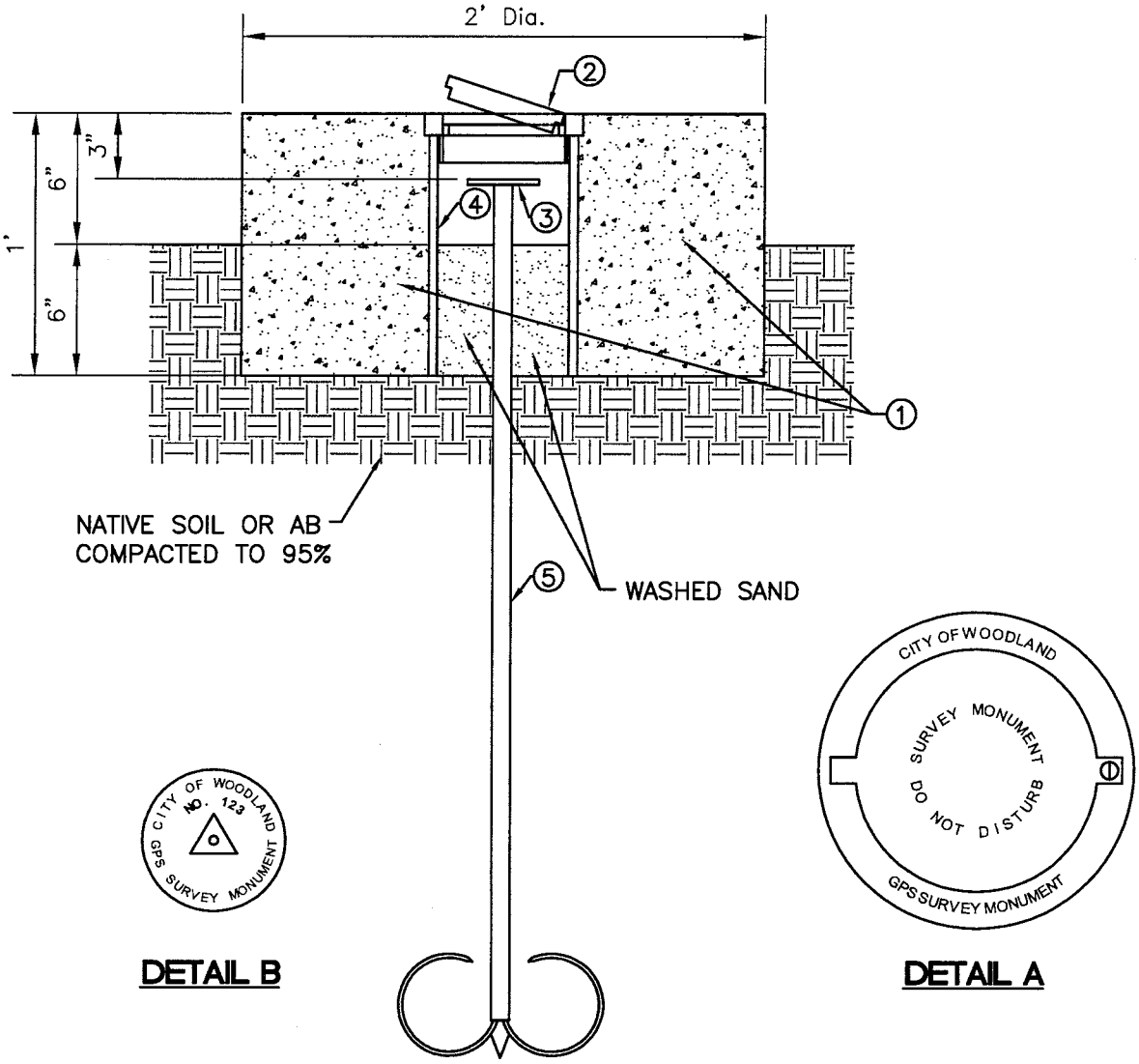

DETAIL B

DETAIL A

MONUMENT CROSS SECTION

NOTES

1. For concrete specifications see Section 5 of the Materials and Construction Methods Division of these Standard Specifications.
2. Benchmark access cover shall be Berntsen BMAC6 TAMP. Cover shall be marked as indicated on detail A.
3. Survey marker Cap shall be 2" Bronze cap for 1000mm FENO Spike. Cap shall be marked as indicated on detail B.
4. 6" Dia. Sch. 40 PVC.
5. 1000mm FENO Driveable Anchored Survey Marker Spike.

CONTROL NETWORK MONUMENT DETAIL

NO.	REVISION	BY			
			CITY OF WOODLAND PUBLIC WORKS DEPARTMENT ENGINEERING DIVISION APPROVED BY DATE 11/05/07 CITY ENGINEER	CONTROL NETWORK MONUMENT FOR NON-TRAFFIC AREAS	0347

SCALE : N.T.S.	FILE NAME	SPEC0348.DWG

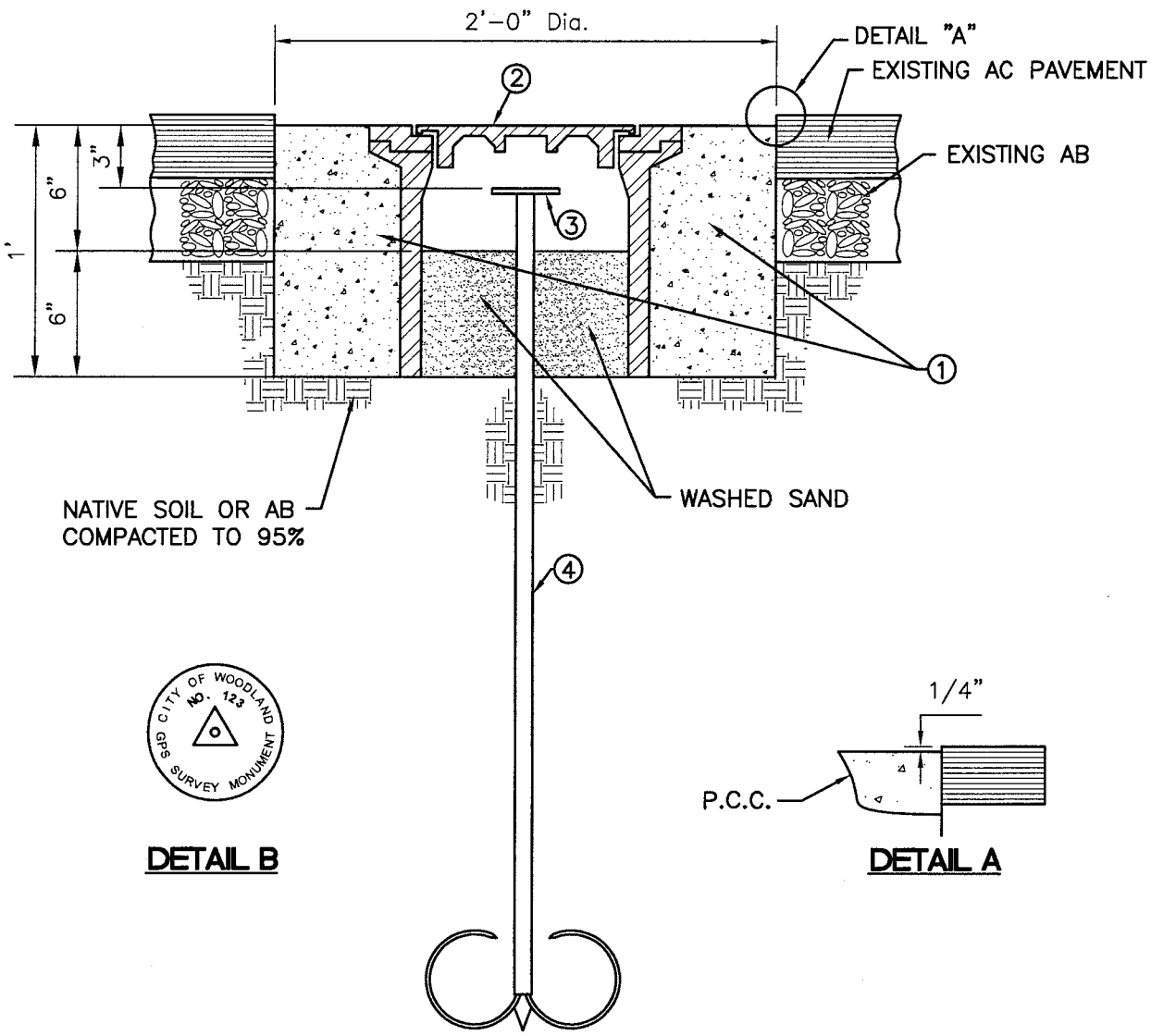

DETAIL B

DETAIL A

MONUMENT CROSS SECTION

NOTES

1. For concrete specifications see Section 5 of the Materials and Construction Methods Division of these Standard Specifications.
2. Monument frame & cover shall be Christy G5 Traffic Valve Box or approved equal. Lid to be marked "MONUMENT".
3. Survey marker Cap shall be 2" Bronze cap for 1000mm FENO Spike. Cap shall be marked as indicated on detail B.
4. 1000mm FENO Driveable Anchored Survey Marker Spike.

CONTROL NETWORK MONUMENT DETAIL

NO.	REVISION	BY			
			CITY OF WOODLAND PUBLIC WORKS DEPARTMENT ENGINEERING DIVISION APPROVED BY DATE 11/05/07 CITY ENGINEER	CONTROL NETWORK MONUMENT FOR TRAFFIC AREAS	0348

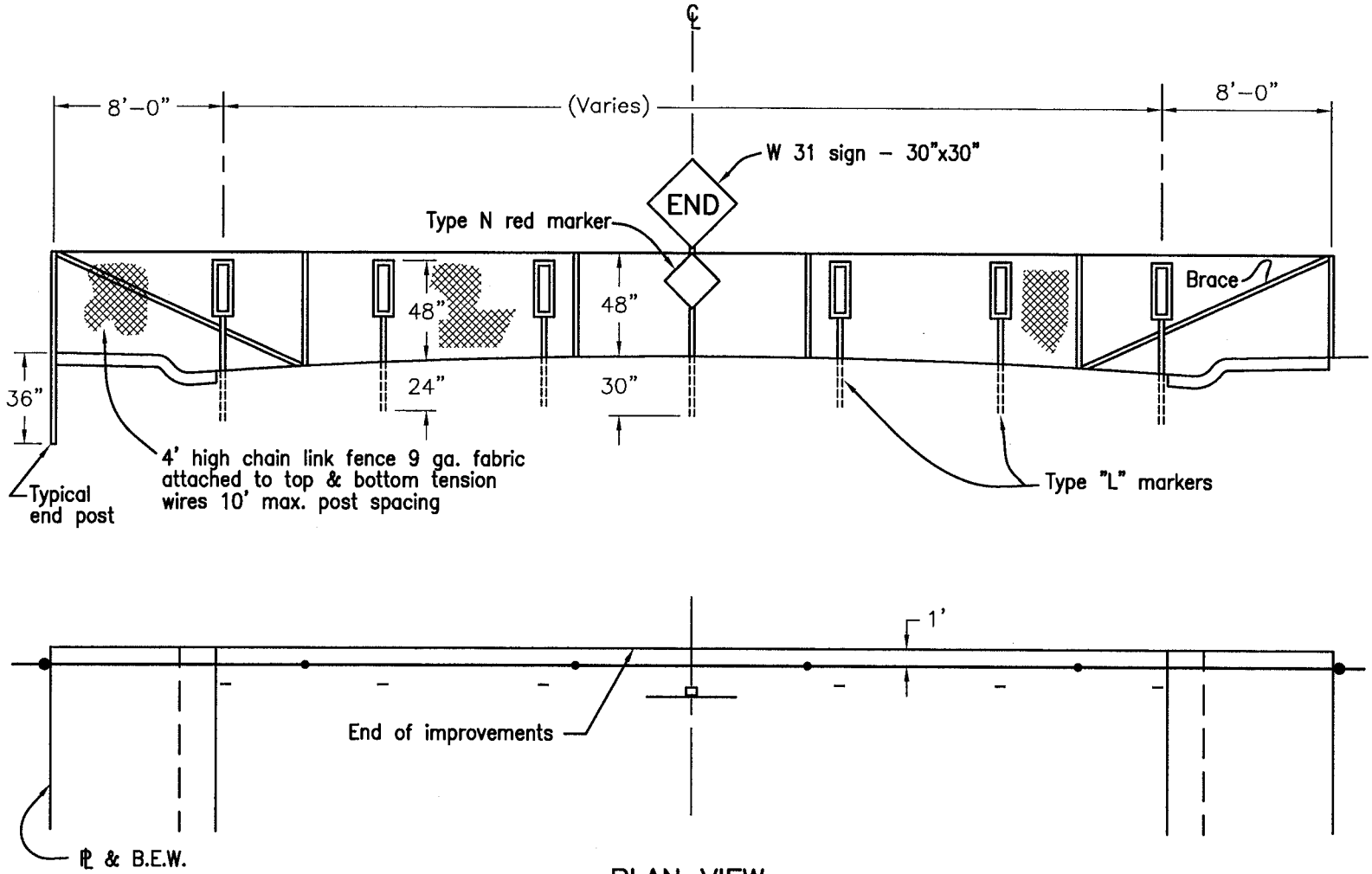

PLAN VIEW

NOTES:

1. End posts to be 1 1/2" I.D. standard weight pipe w/ 8"x36" footing.
2. Braces and line posts to be 1 1/4" standard weight pipe w/ 8"x30" footing.
3. Type N red marker shall have Hi-intensity grade reflective sheeting rather than 9 round reflectors.

NO.	REVISION	BY

CITY OF WOODLAND
PUBLIC WORKS DEPARTMENT
ENGINEERING DIVISION

APPROVED BY
DATE 11/06/07 DICK DONNELLY, CITY ENGINEER

DEAD END STREET SIGNING

0350

SCALE : N.T.S.

FILE NAME SPEC0350.DWG

SCALE : N.T.S.	FILE NAME	SPEC0352.DWG

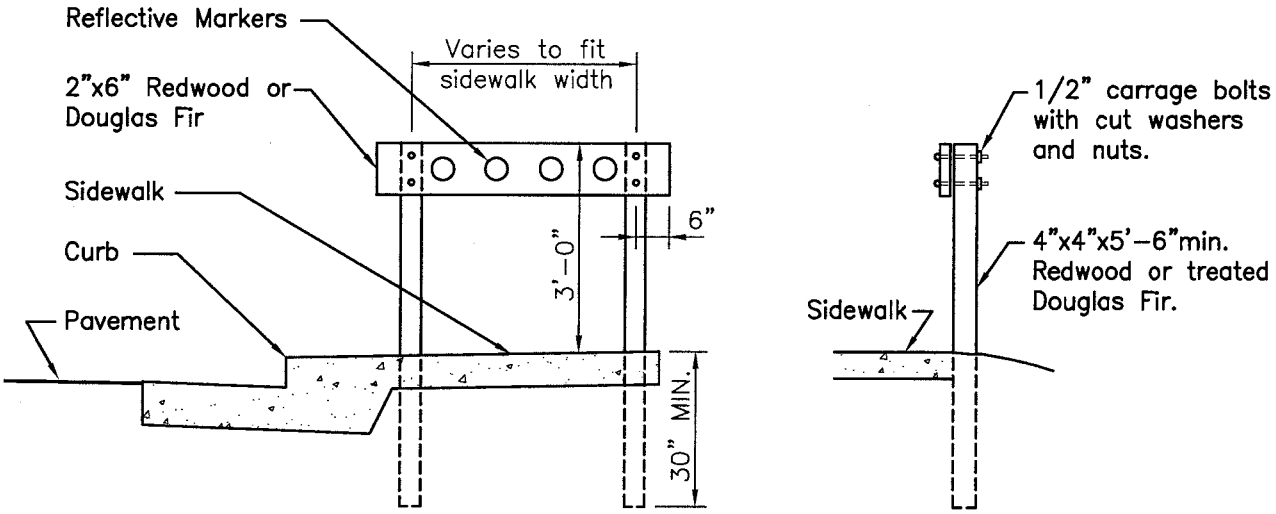

NOTES:

1. Sidewalk barricades to be installed at each location where standard provisions can not be made for pedestrians to continue beyond the terminus of a sidewalk. Locations shall be as determined by City Engineer.

2. All exposed surfaces to be painted with two (2) coats of white paint conforming to section 91-3.02 of State Specifications.

3. In areas with planter strips the barricade need not extend to the curb.

NO.	REVISION	BY

CITY OF WOODLAND
PUBLIC WORKS DEPARTMENT
ENGINEERING DIVISION

APPROVED BY
DATE 11/05/07 DICK DONNELLY, CITY ENGINEER

SIDEWALK BARRICADE

0352

SCALE : n.t.s.	FILE NAME	spec0355.dwg

Detectable Warning Surface (DWS)

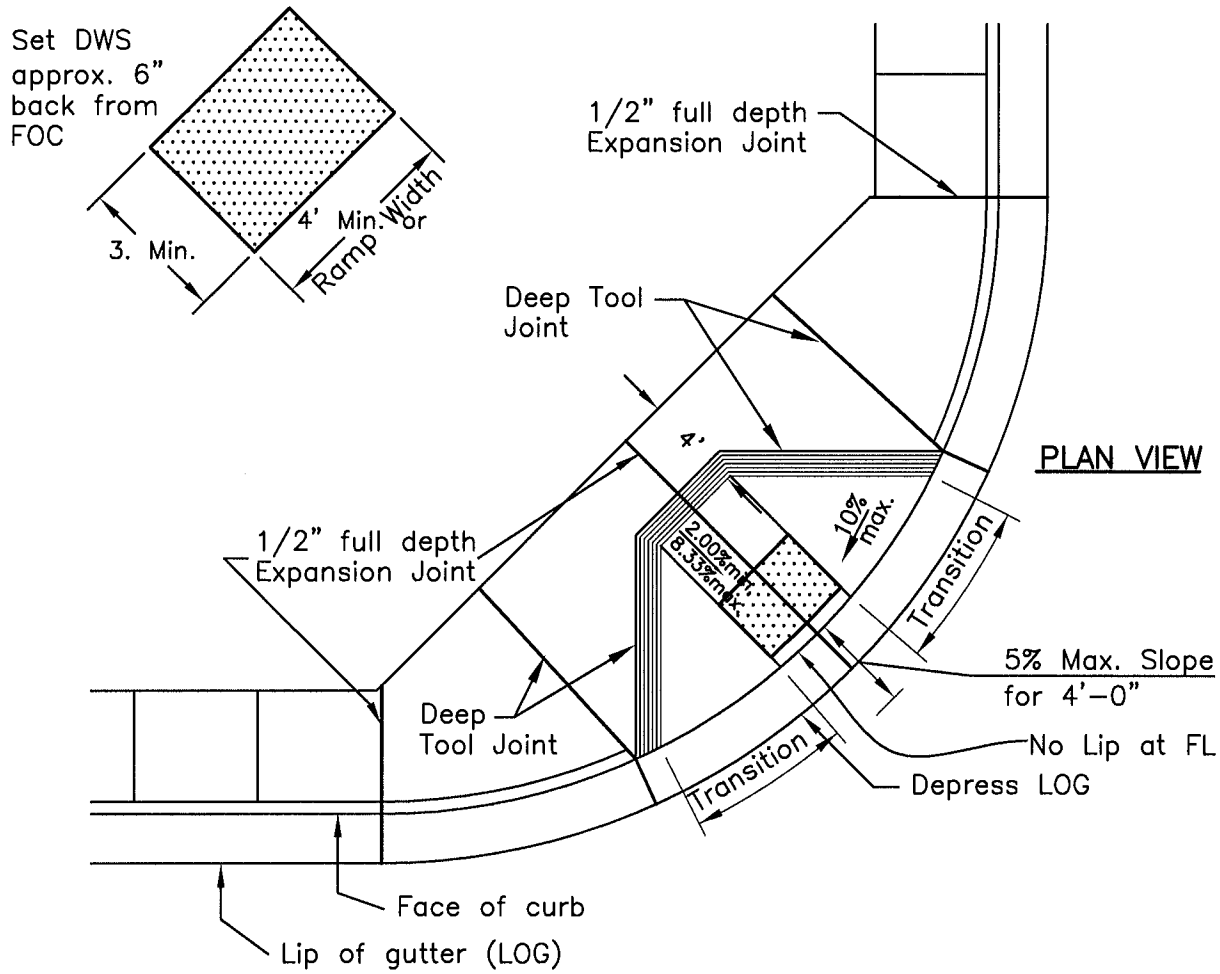

PLAN VIEW

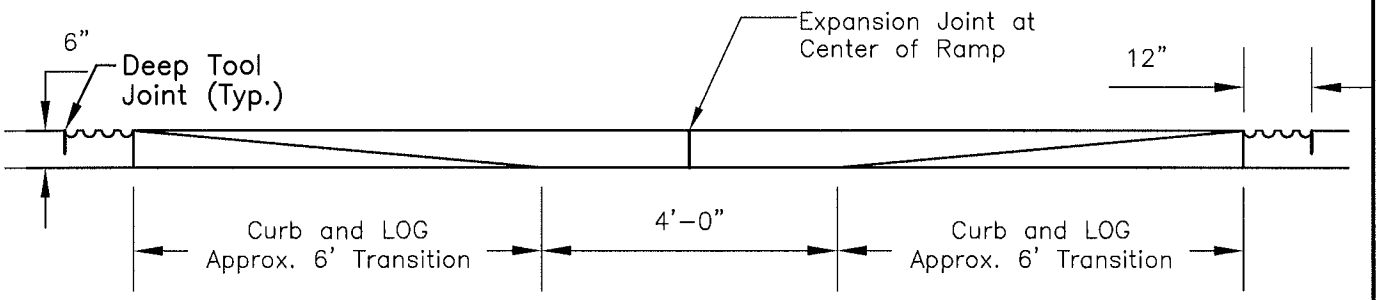

ELEVATION ALONG GUTTER

NOTES:

1. See Section 5, Materials and Construction Methods (MCM), for concrete requirements.
2. All work shall conform to the current version of the Caltrans Standard Plans A88A & A88B.
3. Apply light broom finish to surface of walk at right angles to face of curb. Broom finish curb and gutter parallel with street.
4. Provide 12" wide grooved border at top-break in ramp per CT Std. Plan A88A.
5. See Section 5, MCM, for Detectable Warning Surface requirements. Detectable Warning Surface shall be wet set in concrete for all new construction.
6. In retrofit situations, see Detail 0340 for AC conform and replacement.

REVISION			
Clarifications	CITY OF WOODLAND COMMUNITY DEVELOPMENT DEPARTMENT ENGINEERING DIVISION APPROVED BY DATE 11/22/10 BRENT MEYER, CITY ENGINEER	Curb Ramp for Monolithic Sidewalk	0355

SCALE : n.t.s.	FILE NAME	spec0357.dwg

Detectable Warning Surface (DWS)

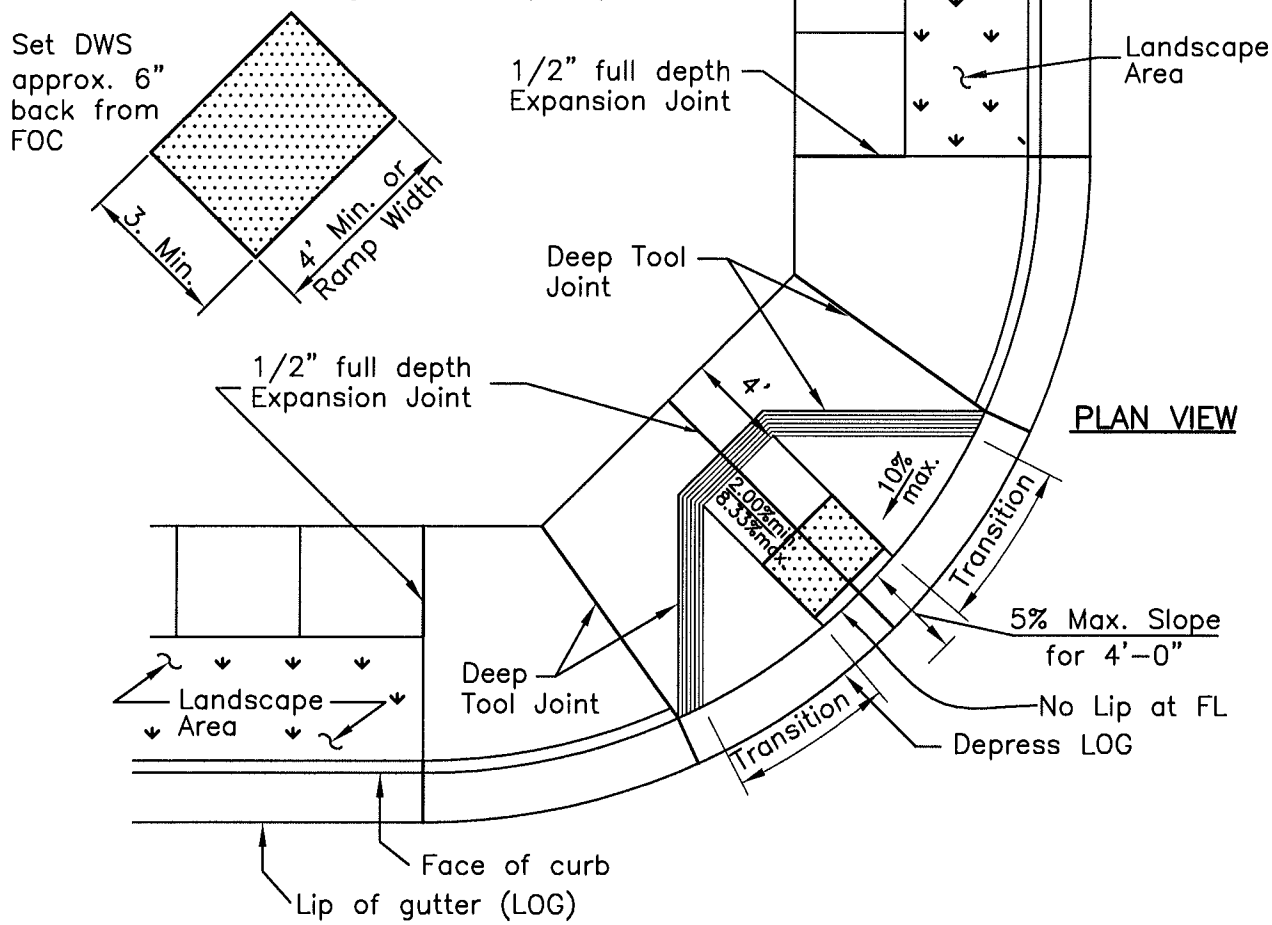

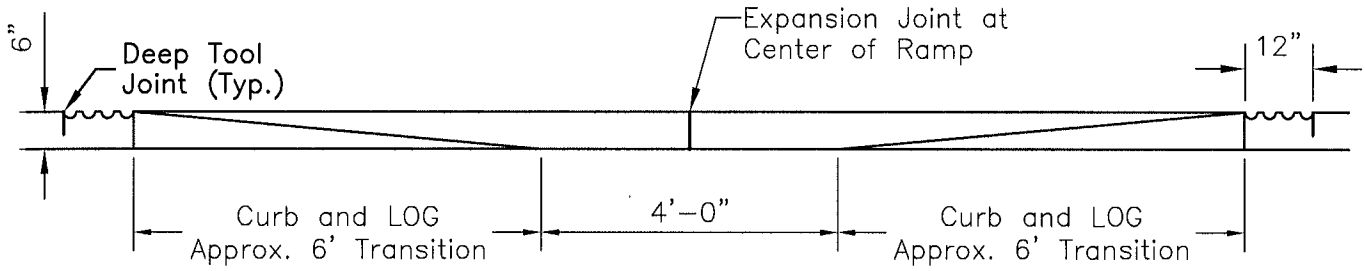

ELEVATION ALONG GUTTER

NOTES:

1. See Section 5, Materials and Construction Methods (MCM), for concrete requirements.
2. All work shall conform to the current version of the Caltrans Standard Plans A88A & A88B.
3. Apply light broom finish to surface of walk at right angles to face of curb. Broom finish curb and gutter parallel with street.
4. Provide 12" wide grooved border at top-break in ramp per CT Std. Plan A88A.
5. See Section 5, MCM, for Detectable Warning Surface requirements. Detectable Warning Surface shall be wet set in concrete for all new construction.
6. In retrofit situations, see Detail 0340 for AC conform and replacement.

REVISION			
Clarifications	CITY OF WOODLAND COMMUNITY DEVELOPMENT DEPARTMENT ENGINEERING DIVISION APPROVED BY DATE 11/22/10 BRENT MEYER, CITY ENGINEER	Curb Ramp for Sidewalk with Planter Strips	0357

SCALE : N.T.S.	FILE NAME	SPEC0360.DWG

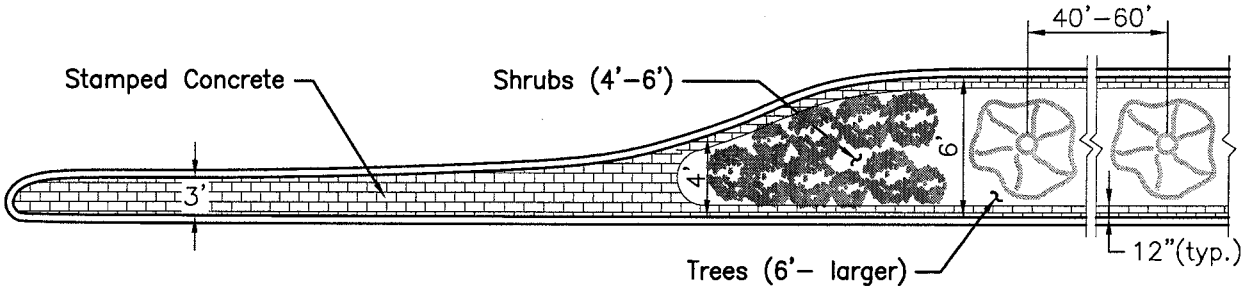

Back of Curb Dimension Table	
4' max.	Stamped concrete
4' to 6'	Ornamental trees/bushes/shrubs
6' and Larger	All ground cover/trees/shrubs

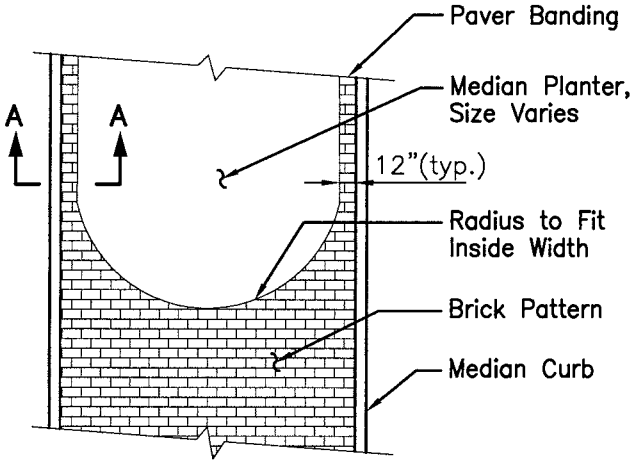

STAMPED CONCRETE

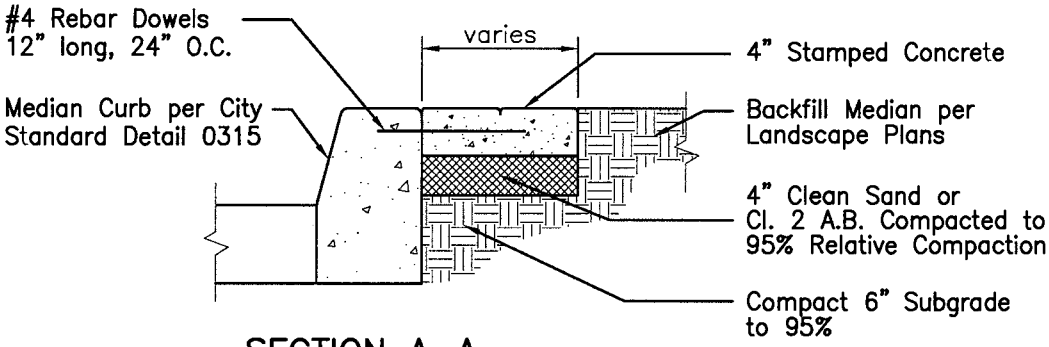

SECTION A–A

NOTES:

1. For concrete specifications see Section 5 of the Materials and Construction Methods Division of these Standard Specifications.
2. Apply light broom finish to surface of walk at right angle with street. Broom finish curb and gutter parallel with street.
3. All edges shall have 1/2" radius.
4. Stamp pattern and color shall be approved by City Engineer. Sample shall be submitted prior to start of work.

NO.	REVISION	BY

CITY OF WOODLAND
PUBLIC WORKS DEPARTMENT
ENGINEERING DIVISION

APPROVED BY
DATE 11/05/07
CITY ENGINEER

STAMPED CONCRETE

0360

SCALE : n.t.s.	FILE NAME	spec0361.dwg

NOTES:

1. Stamp pattern and color shall be approved by City Engineer. Sample shall be submitted prior to start of work.
2. Pigment shall continue through entire depth of concrete.
3. Concrete slump and stamping shall be per manufacturer's recommendations.
4. Maximum rise at joints shall be 1/4".
5. Apply light broom finish to surface of walk at right angle with street.

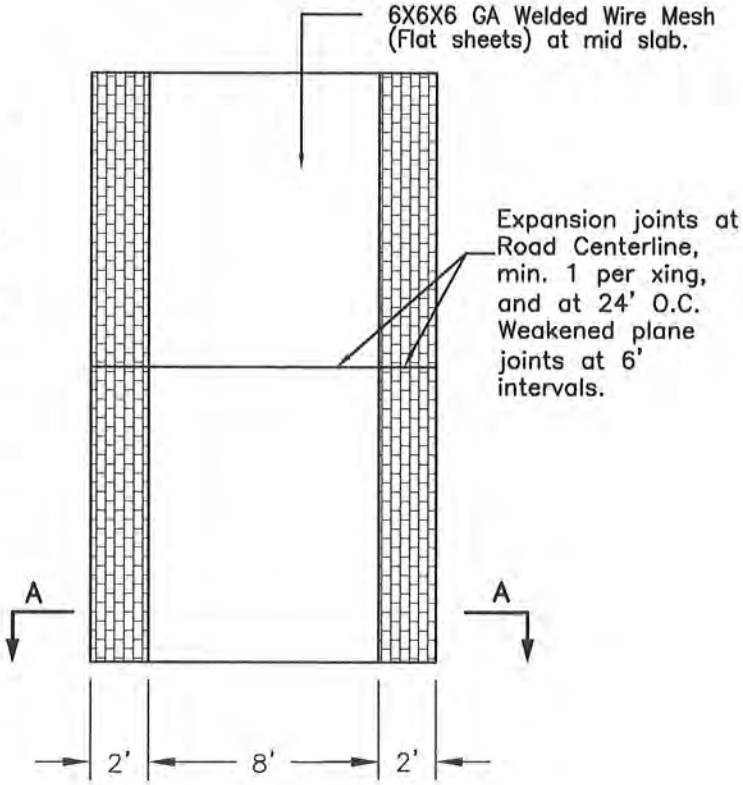

STAMPED CONCRETE

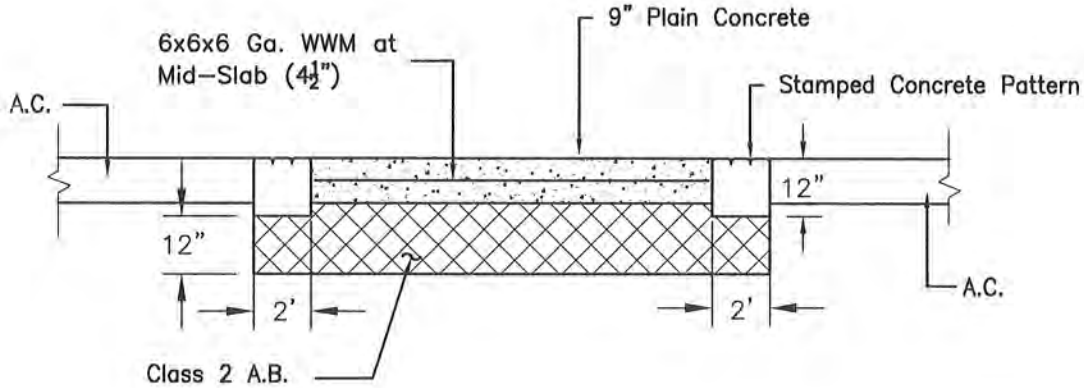

SECTION A-A

REVISION			
Clarify Annotations	CITY OF WOODLAND COMMUNITY DEVELOPMENT DEPARTMENT ENGINEERING DIVISION APPROVED BY DATE 03/23/10 BRENT MEYER, CITY ENGINEER	Stamped Concrete Crosswalk	0361

SCALE : N.T.S.	FILE NAME	SPEC0365.DWG

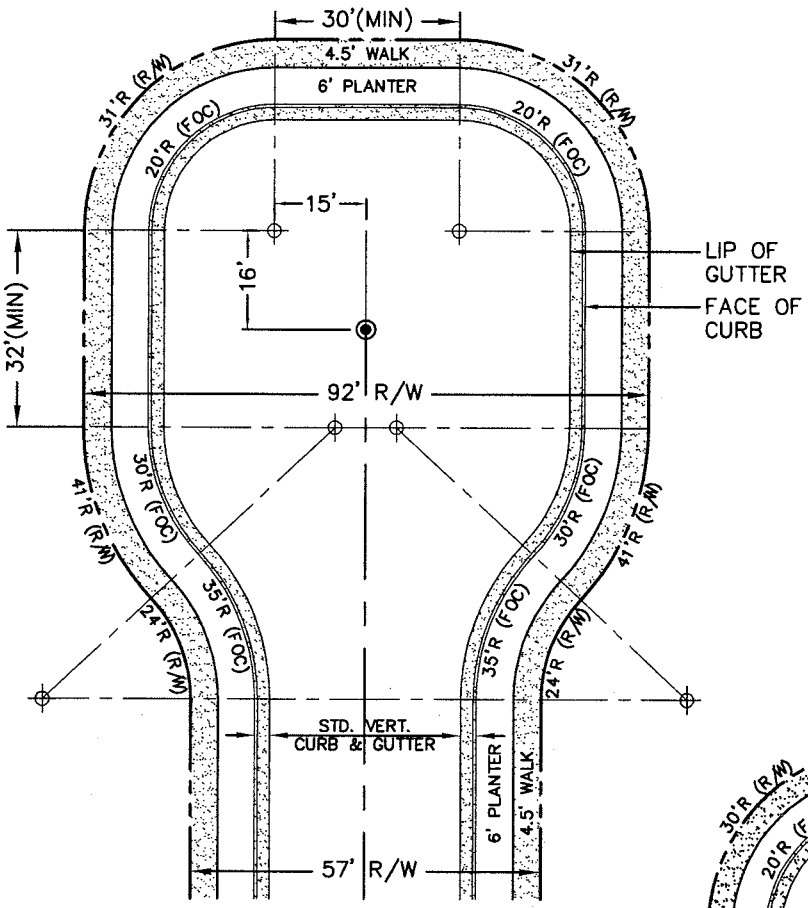

57' RIGHT-OF-WAY

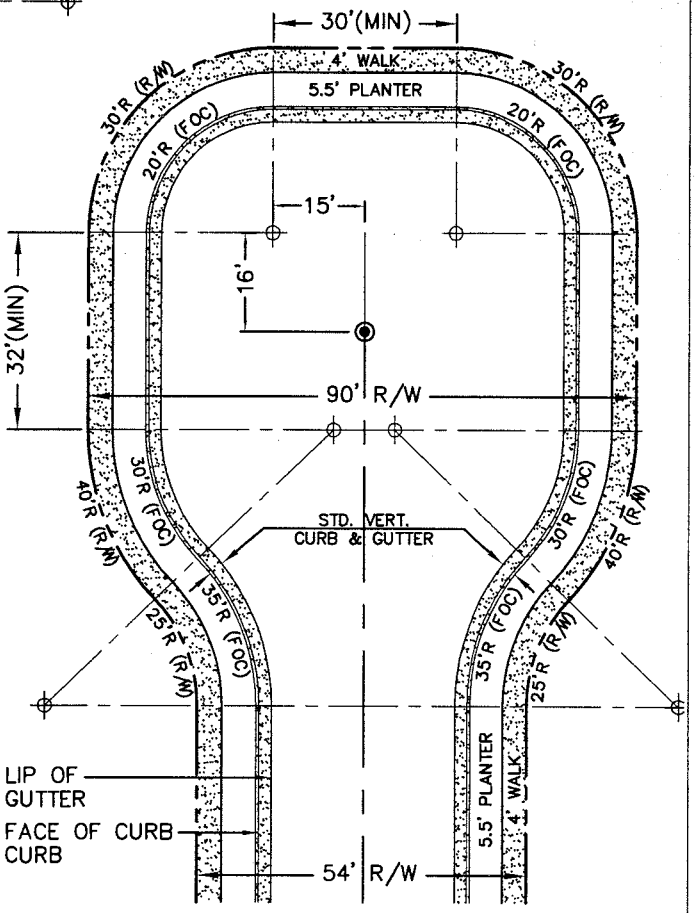

54' RIGHT-OF-WAY

◉ SURVEY MONUMENT

⊕ RADIUS POINT

SCALE: 1" = 30'

NO.	REVISION	BY

CITY OF WOODLAND
PUBLIC WORKS DEPARTMENT
ENGINEERING DIVISION

APPROVED BY
DATE 11/05/07 DICK DONNELLY, CITY ENGINEER

SQUARE CUL-DE-SAC STREET LAYOUT

0365

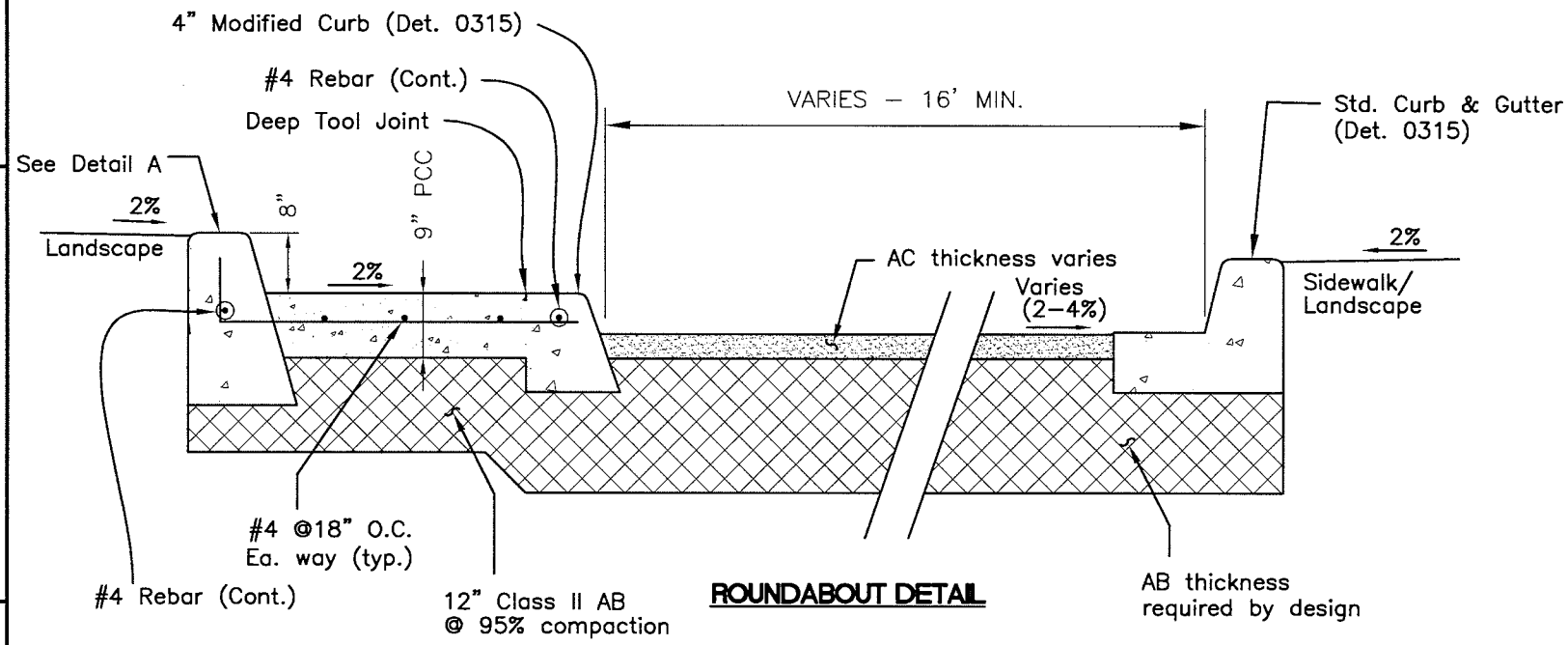

ROUNDABOUT DETAIL

NOTES

1. Truck apron, decorative raised–mountable concrete pavying, pattern and colors are subject to review and approval by City Engineer.

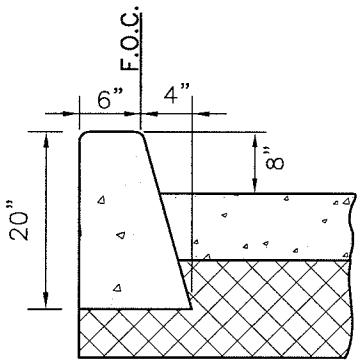

DETAIL A

REVISION

Revise Notes & apron/curb

CITY OF WOODLAND
COMMUNITY DEVELOPMENT DEPARTMENT
ENGINEERING DIVISION

APPROVED BY
DATE 03/23/10 BRENT MEYER, CITY ENGINEER

Roundabout

0370

SCALE :

FILE NAME

spec0370.dwg

SCALE : N.T.S.	FILE NAME	SPEC0375.DWG

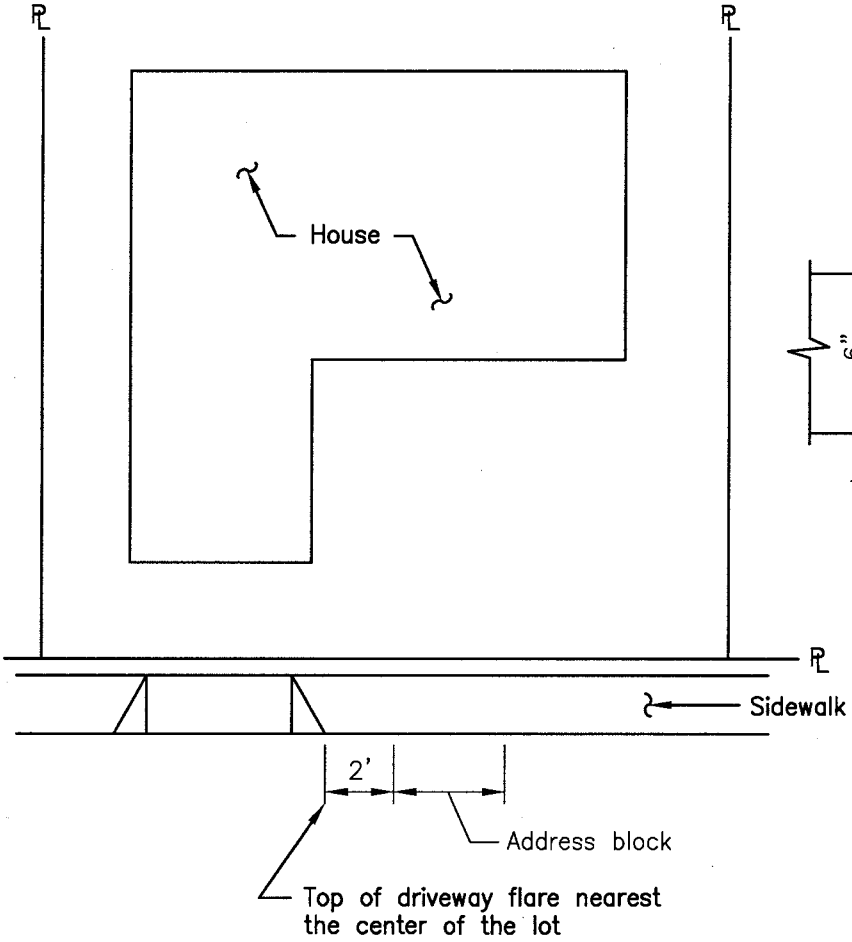

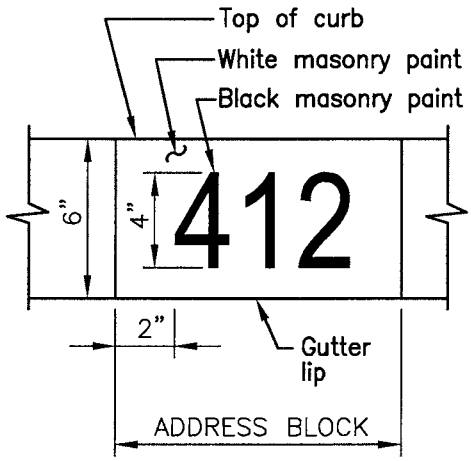

TYPICAL LOT CURB ADDRESS LOCATION

NOTES

1. Direct personal contact shall be made with individual property owners with permission to proceed with installation secured prior to installation of curb numbers.
2. When curb address numbers are applied, they must be maintained and/or replaced by home owner as shown.
3. Existing curb shall be cleaned with a wire brush prior to placing address numbers.

NO.	REVISION	BY

CITY OF WOODLAND
PUBLIC WORKS DEPARTMENT
ENGINEERING DIVISION

APPROVED BY
DATE 11/05/07 DICK DONNELLY, CITY ENGINEER

CURB ADDRESS NUMBERS

0375

SCALE : NTS	FILE NAME	SPEC0380.DWG

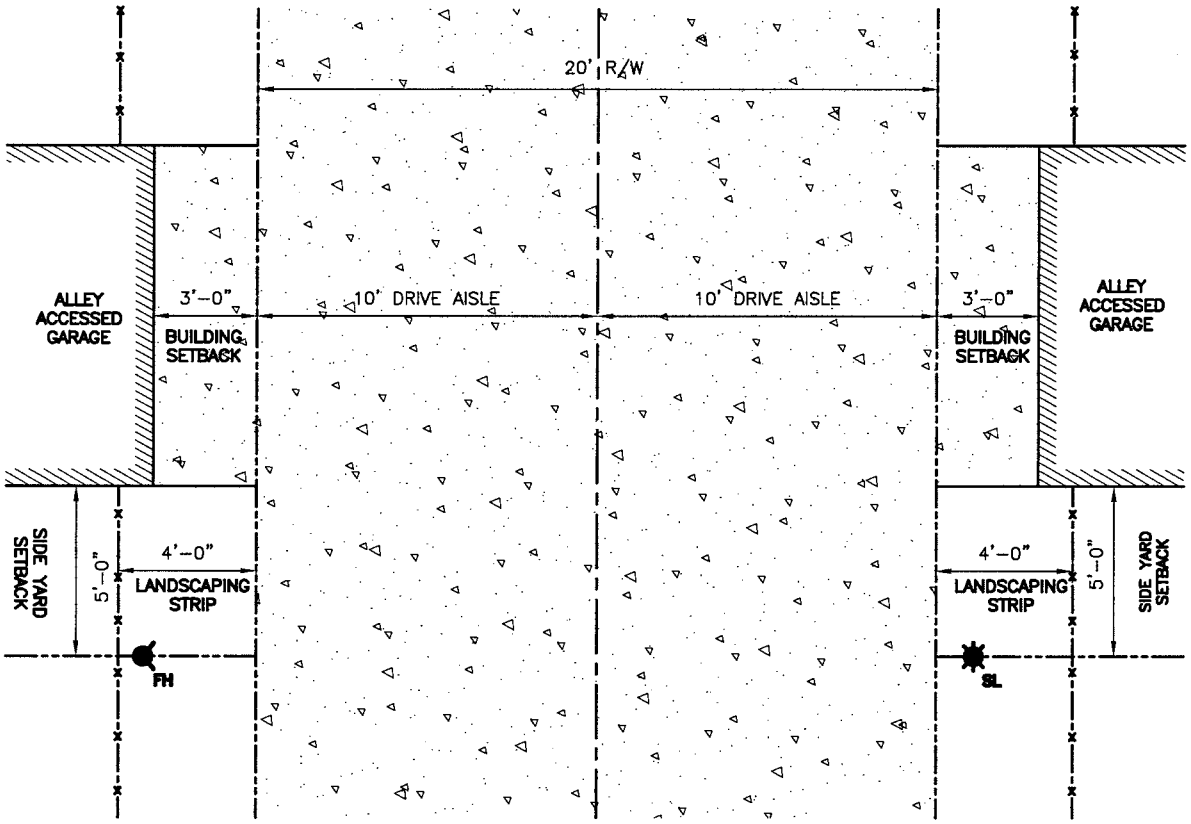

PLAN VIEW

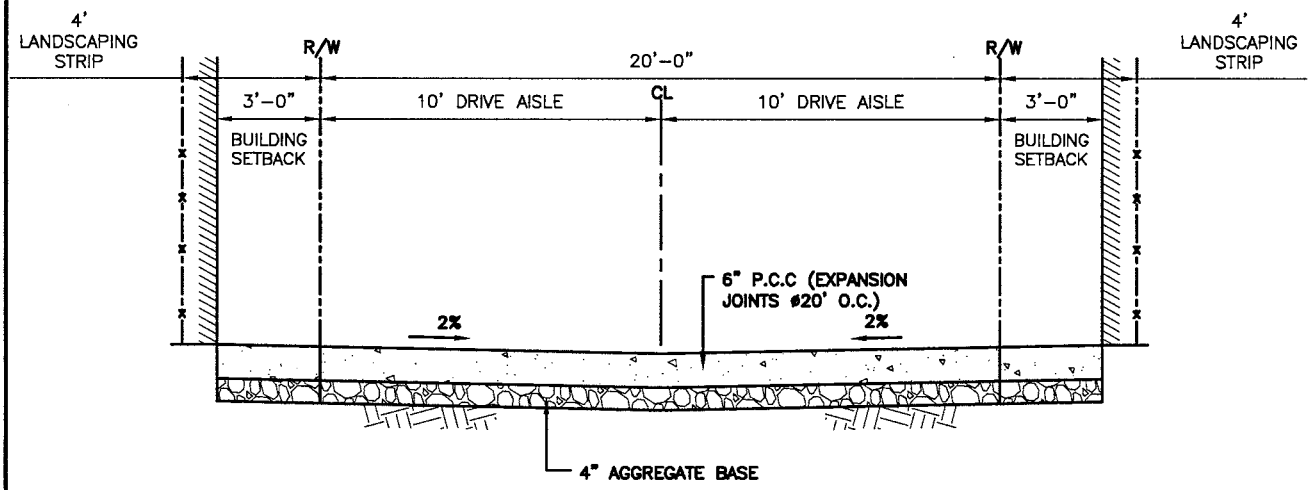

PROFILE VIEW

NO.	REVISION	BY

CITY OF WOODLAND
PUBLIC WORKS DEPARTMENT
ENGINEERING DIVISION

APPROVED BY
DATE 11/05/07 DICK DONNELLY, CITY ENGINEER

SPRINGLAKE
ALLEY SECTION

0380

SCALE :	FILE NAME	spec0385.dwg

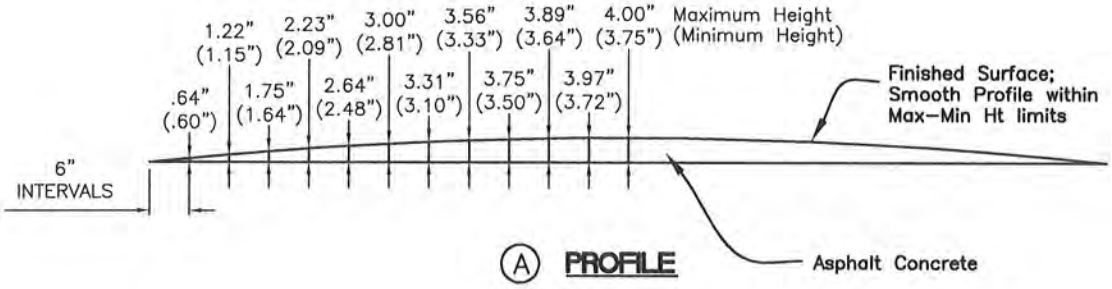

Ⓐ **PROFILE**

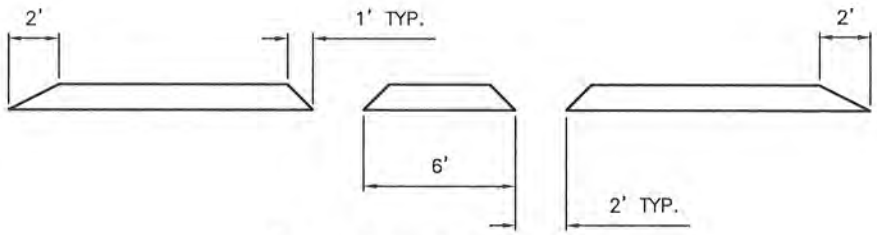

Ⓑ **CROSS SECTION**

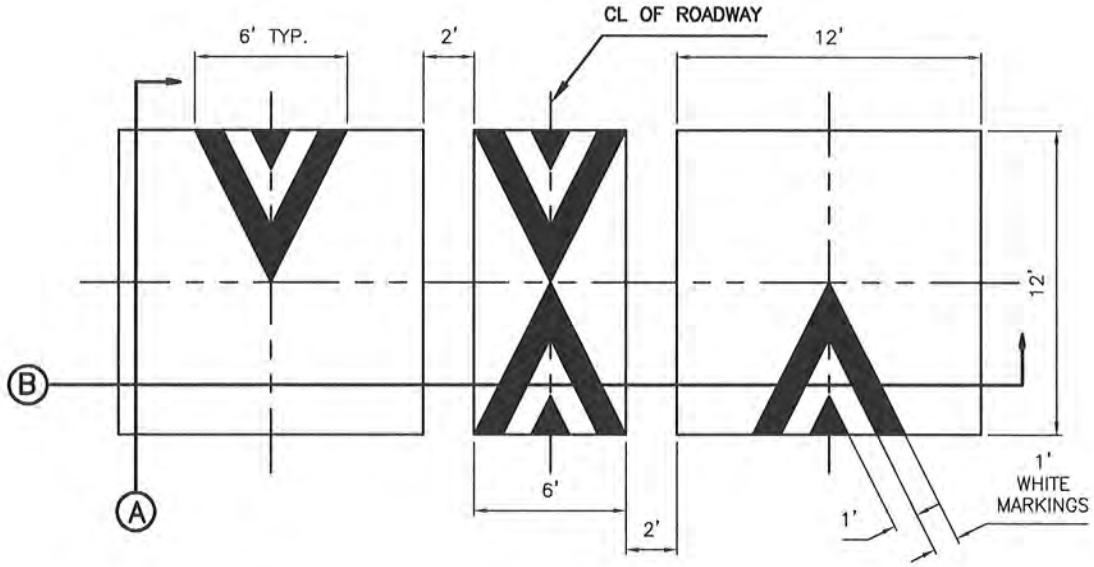

STRIPING DETAIL

REVISION			
New	CITY OF WOODLAND COMMUNITY DEVELOPMENT DEPARTMENT ENGINEERING DIVISION APPROVED BY DATE 03/23/10 BRENT MEYER, CITY ENGINEER	Speed Cushion	0385

SCALE : N.T.S.	FILE NAME	SPEC0400.DWG

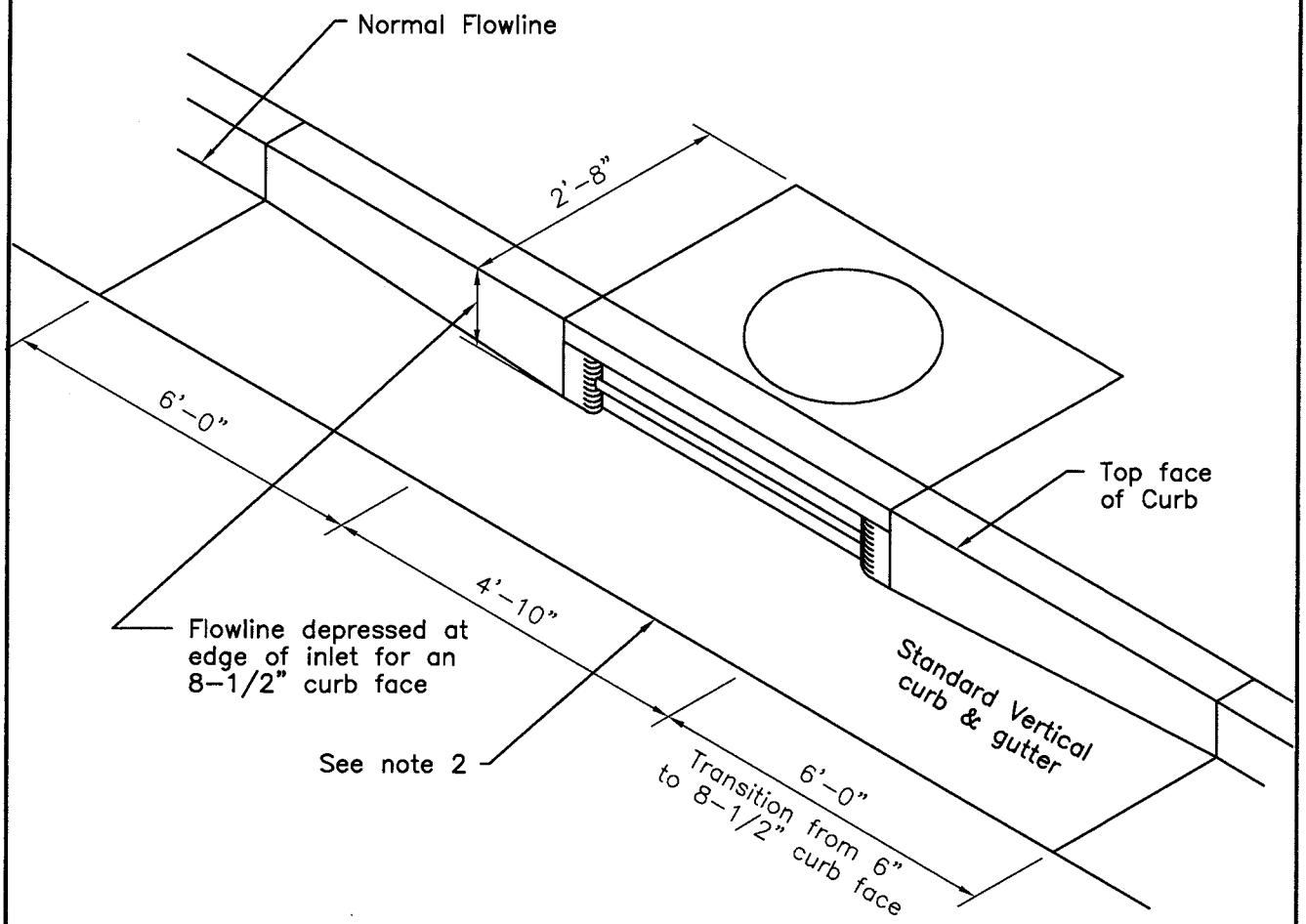

NOTES

1. When at curb return, face of box shall be on tangent.
2. Lip of gutter shall not be depressed across face of inlet.
3. Inlet model shall be Santa Rosa Model 4A or Teichert Model CB4-2 (2'x4') or approved equal with guard rod and form for flow line.
4. Inlet cover should be concrete with cast iron frame ring and NPDES logo.

NO.	REVISION	BY

CITY OF WOODLAND
PUBLIC WORKS DEPARTMENT
ENGINEERING DIVISION

APPROVED BY
DATE 11/05/07 DICK DONNELLY, CITY ENGINEER

CURB INLET

0400

SCALE : N.T.S.	FILE NAME	SPEC0405.DWG

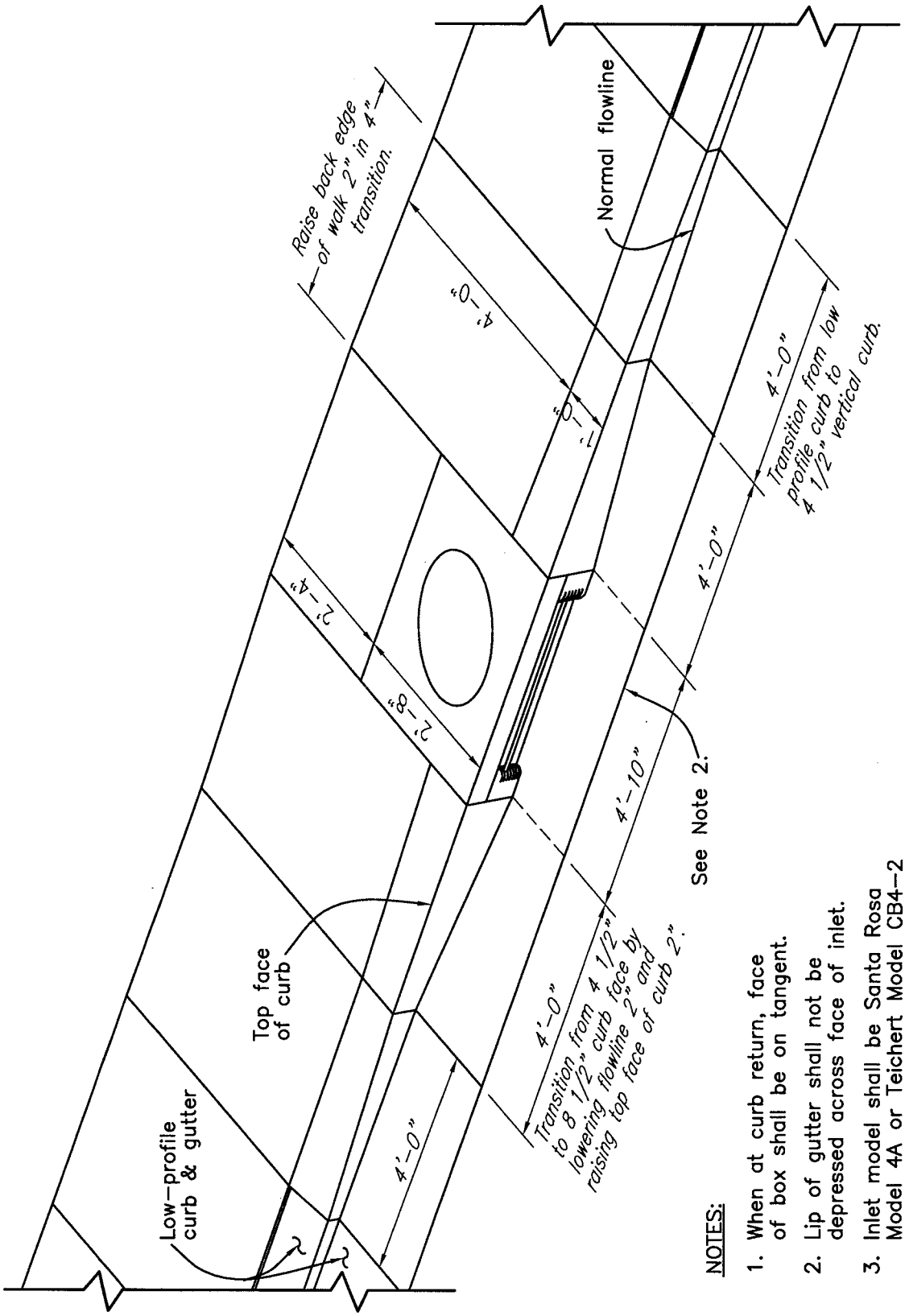

NOTES:

1. When at curb return, face of box shall be on tangent.
2. Lip of gutter shall not be depressed across face of inlet.
3. Inlet model shall be Santa Rosa Model 4A or Teichert Model CB4-2 or approved equal with guard rod and form for inlet entrance.
4. Inlet cover should be concrete with cast iron frame ring and NPDES logo.

NO.	REVISION	BY

CITY OF WOODLAND
PUBLIC WORKS DEPARTMENT
ENGINEERING DIVISION

APPROVED BY
DATE 11/05/07 DICK DONNELLY, CITY ENGINEER

CURB INLET USED WITH LOW PROFILE CURB

0405

SCALE : NTS	FILE NAME	spec0408.dwg

STAMP MESSAGE AND SYMBOLS

DIMENSIONS MAY VARY AMONG THE STAMP DESIGNS SHOWN BELOW, BUT SHALL NOT EXCEED THE MAXIMUM DIMENSIONS.

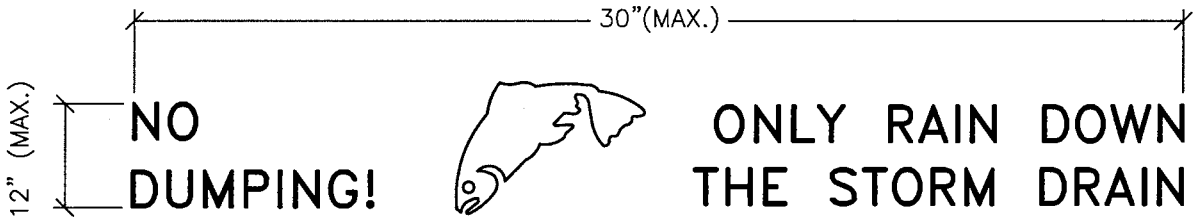

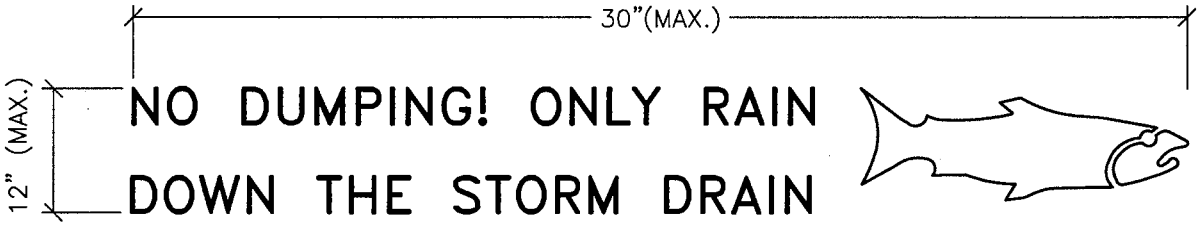

NOTES:

1. Gutter pan in front of storm drain shall be stamped with one of the above messages and symbols.

NO.	REVISION	BY

CITY OF WOODLAND
PUBLIC WORKS DEPARTMENT
ENGINEERING DIVISION

APPROVED BY
DATE 11/05/07 DICK DONNELLY, CITY ENGINEER

STORM DRAIN
CONCRETE STAMP

0408

SCALE : N.T.S.	FILE NAME	SPEC0410.DWG

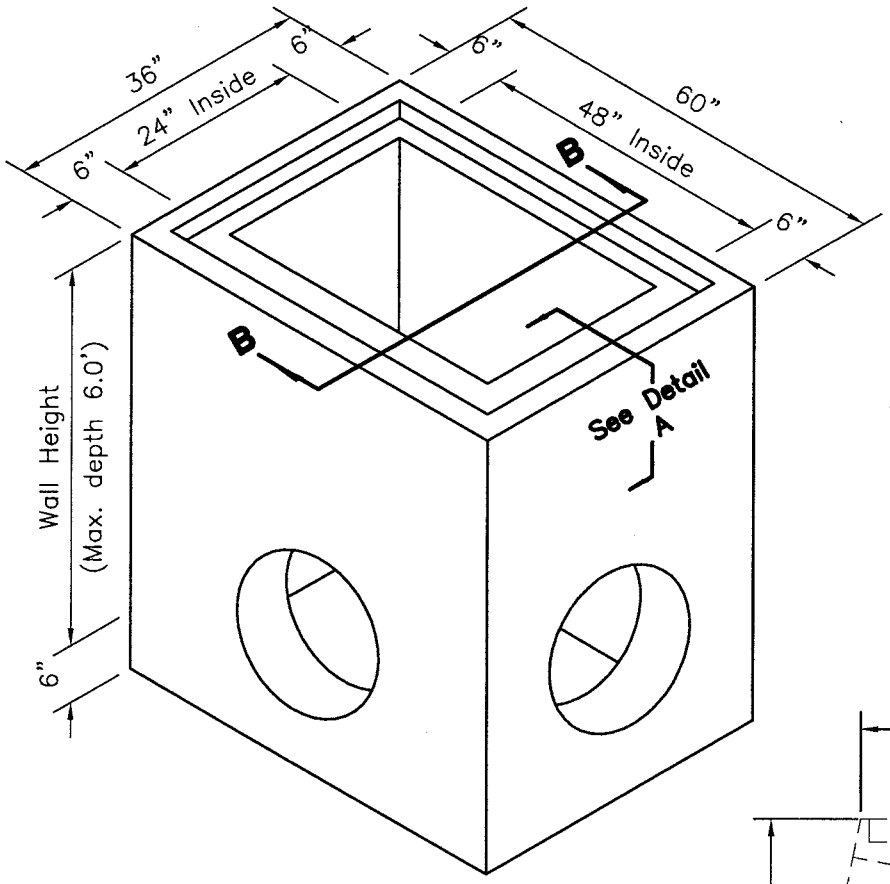

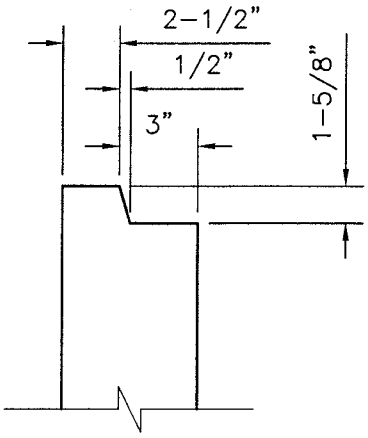

DETAIL A

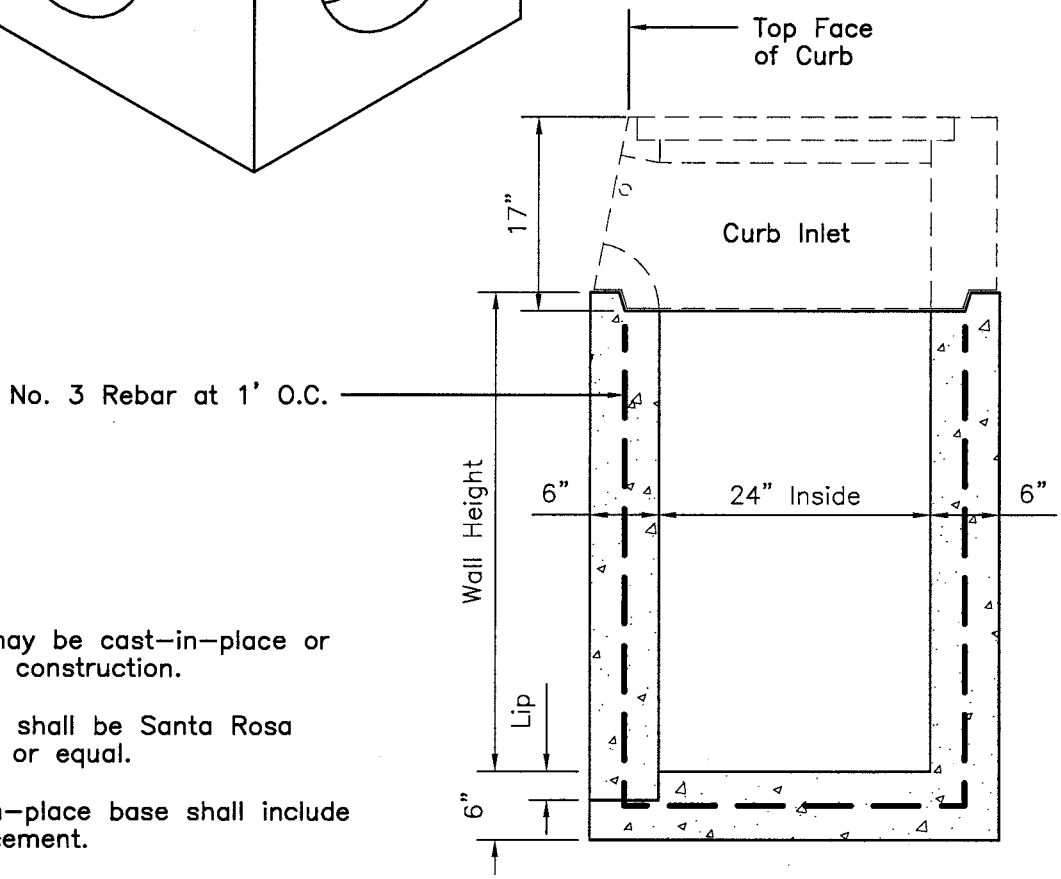

SECTION B-B

NOTES

1. Base may be cast-in-place or precast construction.
2. Precast shall be Santa Rosa B48R4, or equal.
3. Cast-in-place base shall include reinforcement.

NO.	REVISION	BY

CITY OF WOODLAND
PUBLIC WORKS DEPARTMENT
ENGINEERING DIVISION

APPROVED BY
DATE 11/05/07 DICK DONNELLY, CITY ENGINEER

CATCH BASIN BASE

0410

SCALE : N.T.S.	FILE NAME	0415.DWG

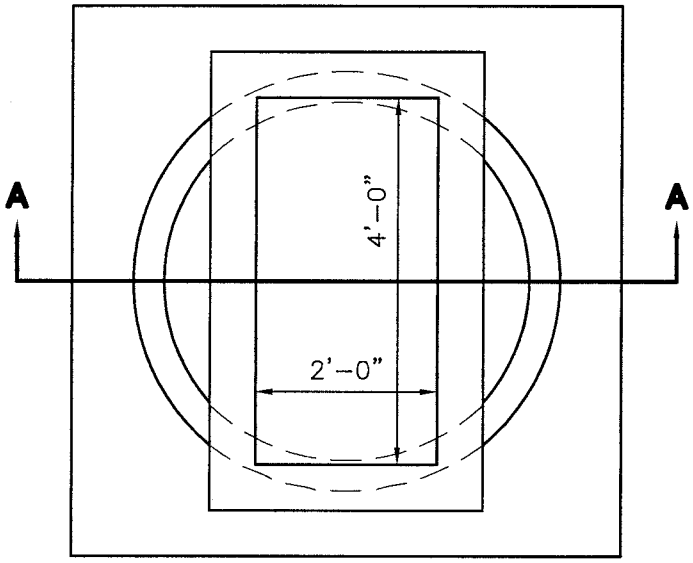

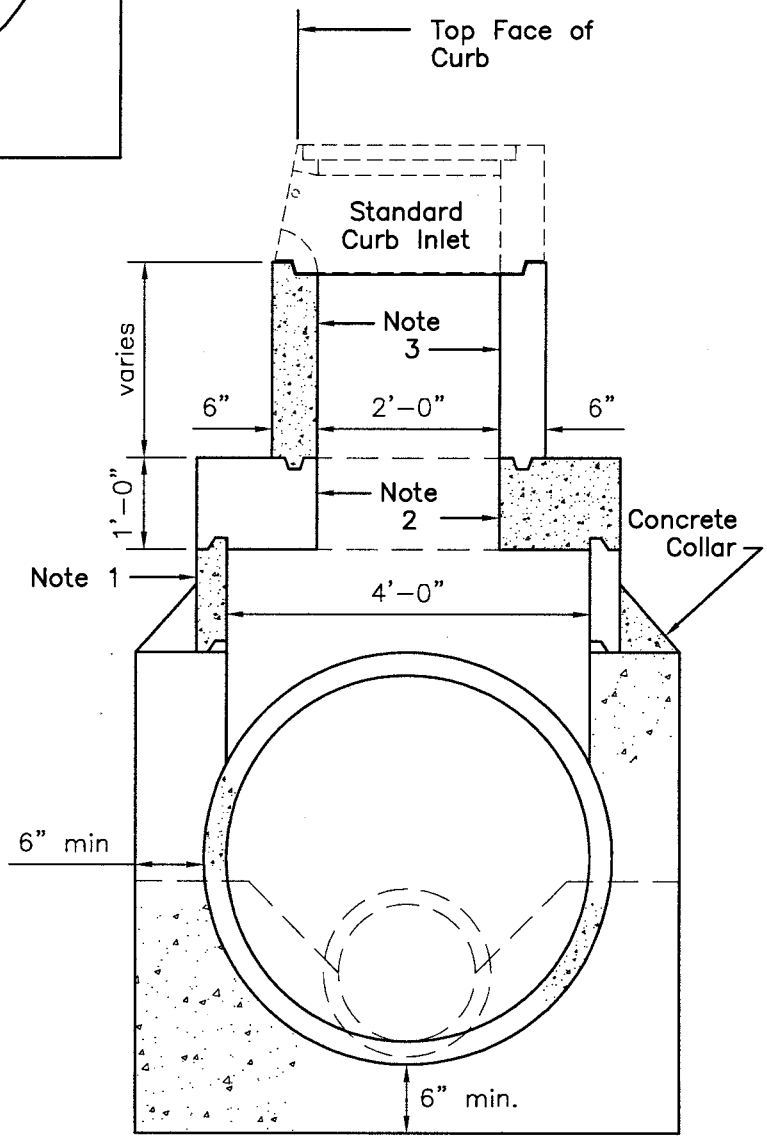

SECTION A-A

NOTES:

1. Cast in place or precast vertical manhole wall in one, two or three foot lengths are optional.
2. Precast 48" dia. manhole reducer slab for Santa Rosa Model 4A Curb Inlet, or equal.
3. 24"x48" (inside dims.) catch basin vert. wall. May be cast in place or precast. Cast in place shall include engineered reinforcement.
4. Cast in place manhole bases shall have fully formed interior and exterior walls. Pouring the walls of the base against the wall of the excavation shall not be permitted.

NO.	REVISION	BY

CITY OF WOODLAND
PUBLIC WORKS DEPARTMENT
ENGINEERING DIVISION

APPROVED BY
DATE 11/05/07 DICK DONNELLY, CITY ENGINEER

CURB INLET MANHOLE

0415

SCALE : N.T.S.	FILE NAME	SPEC0420.DWG

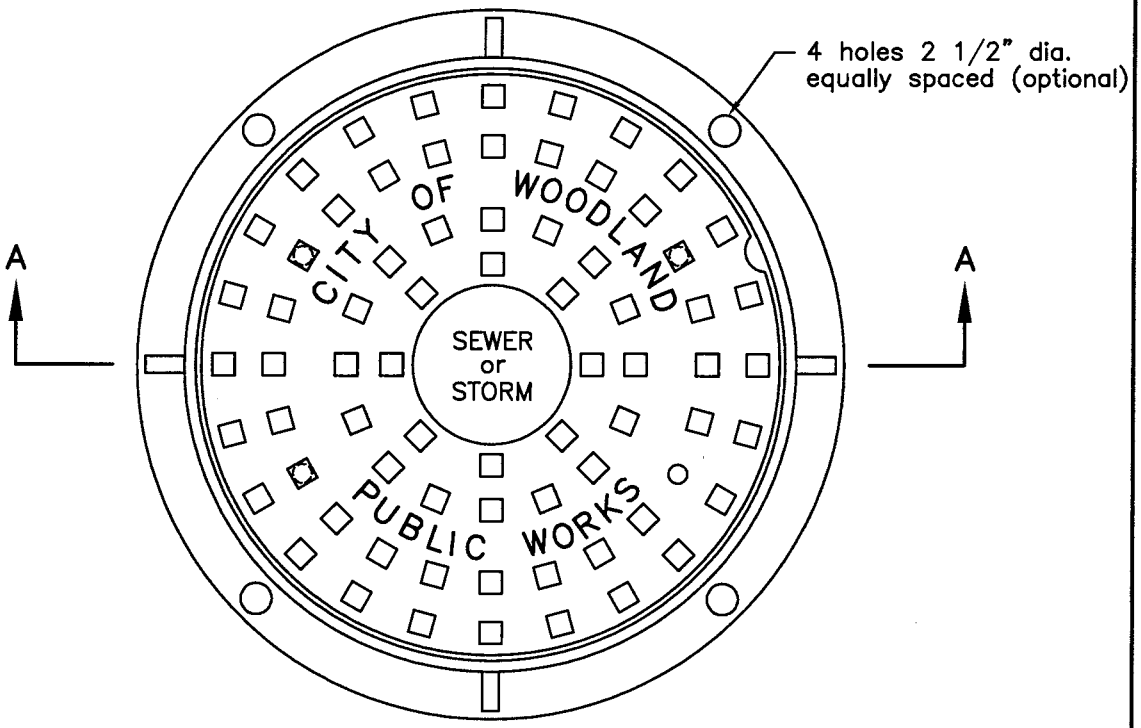

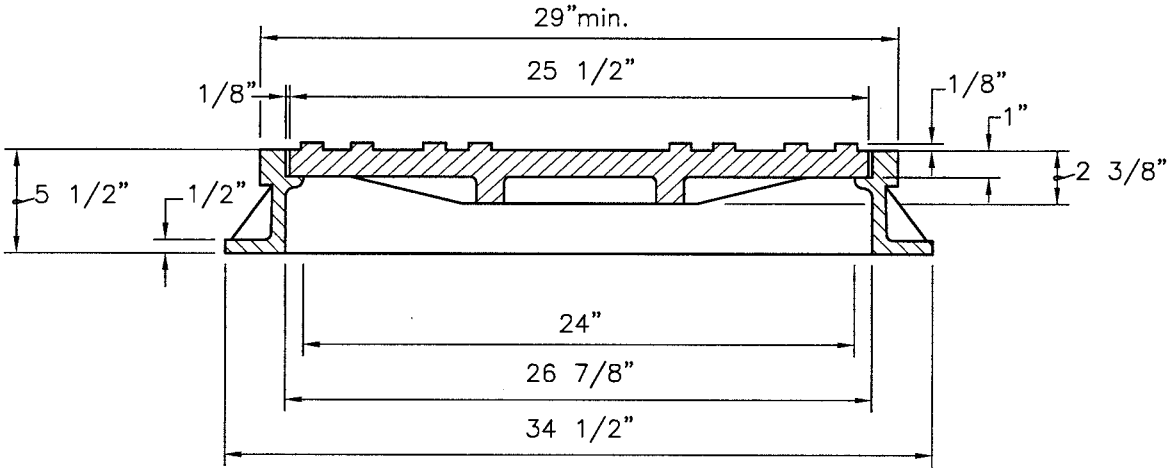

SECTION A–A

NOTES:

1. Ref. D & L Supply No. A 1032 or approved equal.
2. Frame and cover to exceed H 20 wheel load rating.
3. One edge pry blind pick hole.
4. One 1 1/4" dia. vent/pick hole (sewer). Four 1 1/4" dia. vent/pick hole (storm).
5. Frame and cover bearing surfaces shall be machined to assure close, quiet fit.
6. Castings shall be dipped in black bituminous paint.
7. In flood zone areas, watertight manhole frames with bolted lids and gaskets shall be used.

NO.	REVISION	BY

CITY OF WOODLAND
PUBLIC WORKS DEPARTMENT
ENGINEERING DIVISION

APPROVED BY
DATE 11/05/07 DICK DONNELLY, CITY ENGINEER

MANHOLE
FRAME AND COVER

0420

SCALE : n.t.s.	FILE NAME	spec0425.dwg

NOTES:

1. Use this Manhole for storm pipes that are 36" inside diameter or smaller.
2. Case in place manhole bases shall have fully formed interior and exterior walls. Do not place concrete for walls against edges of the excavation.
3. Grout the inside and outside of all joints.

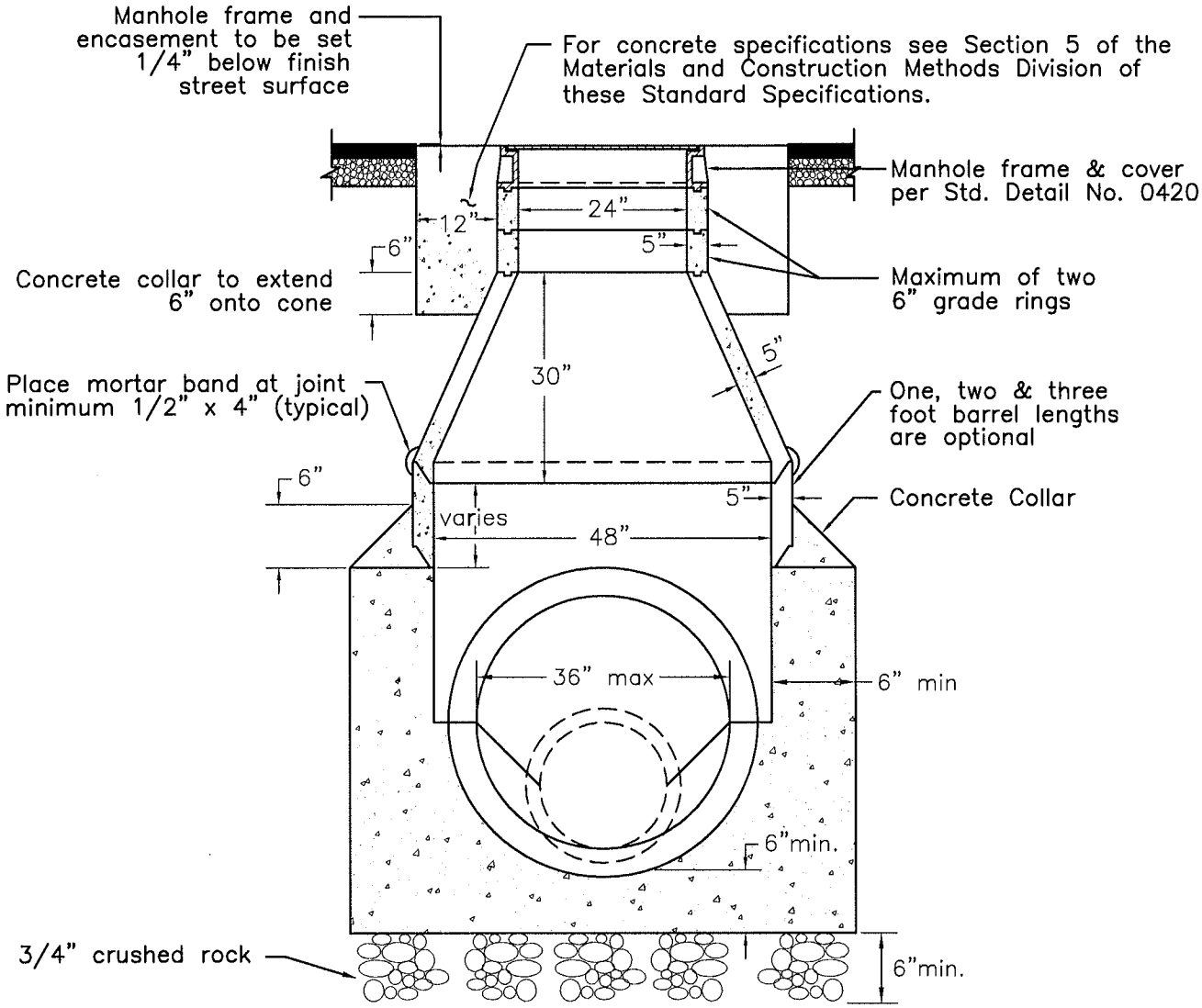

REVISION			
Add Note 3 – Grout all joints	CITY OF WOODLAND COMMUNITY DEVELOPMENT DEPARTMENT ENGINEERING DIVISION APPROVED BY DATE 11/22/10 BRENT MEYER, CITY ENGINEER	Type I Storm Drain Manhole	0425

SCALE : n.t.s.	FILE NAME	spec0430.dwg

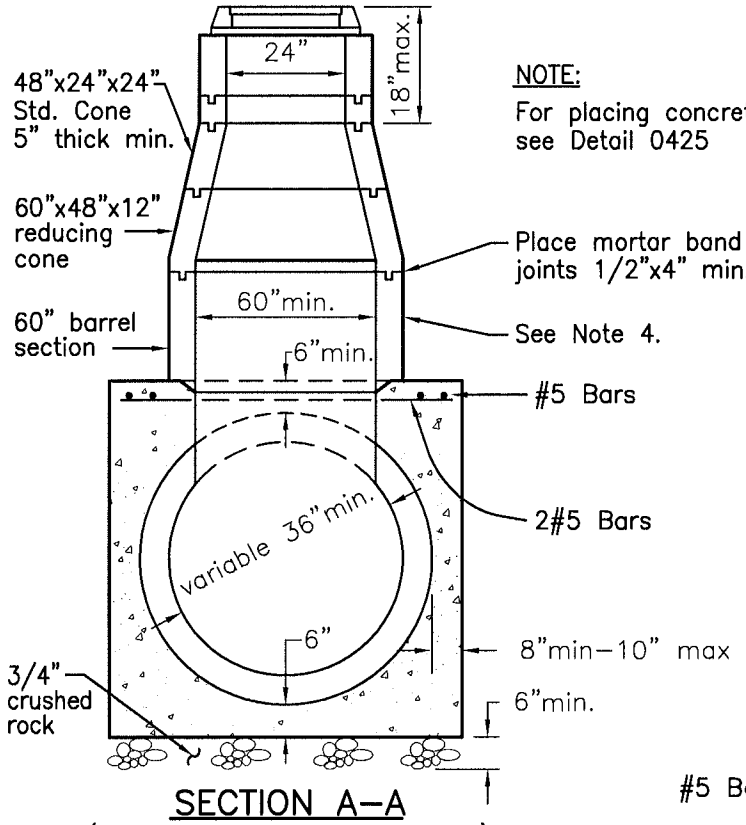

SECTION A–A
(Reinforced concrete pipe only)

NOTE:
For placing concrete collar, see Detail 0425

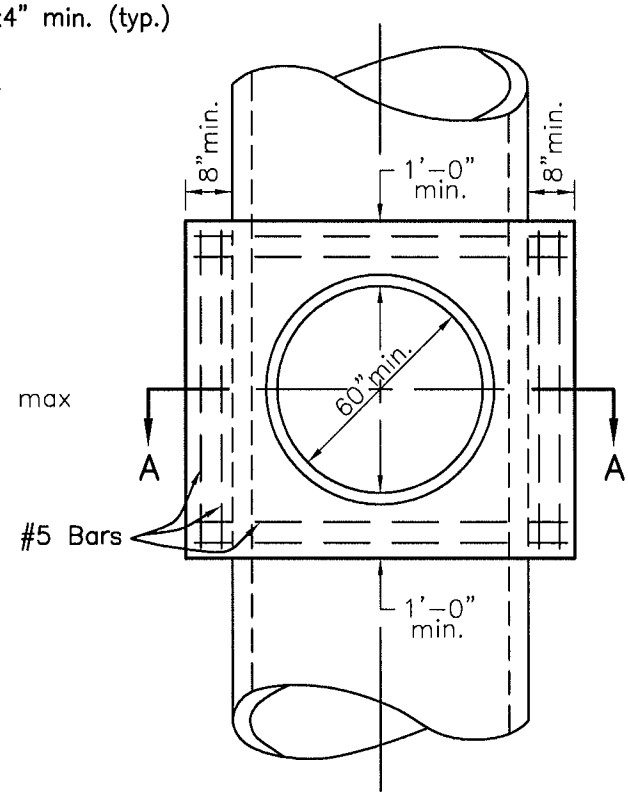

TYPICAL TOP VIEW
(w/ barrel, cone & cover removed)

NOTES:

1. Use this detail for pipes larger than 36" inside diameter.
2. Remove concrete in manhole opening and construct riser base while concrete is still fresh.
3. Place riser section(s) after concrete has set.
4. Install 60" barrel sections as needed to adjust height. Wall thickness shall be 6" minimum.
5. Case in place manhole bases shall have fully formed interior and exterior walls. Do not place concrete for walls against edges of the excavation.
6. Grout the inside and outside of all joints.

REVISION			
Add Note 6 – Grout all joints	CITY OF WOODLAND COMMUNITY DEVELOPMENT DEPARTMENT ENGINEERING DIVISION APPROVED BY DATE 11/22/10 BRENT MEYER, CITY ENGINEER	Type II Storm Drain Manhole	0430

SCALE :	FILE NAME	spec0435.dwg

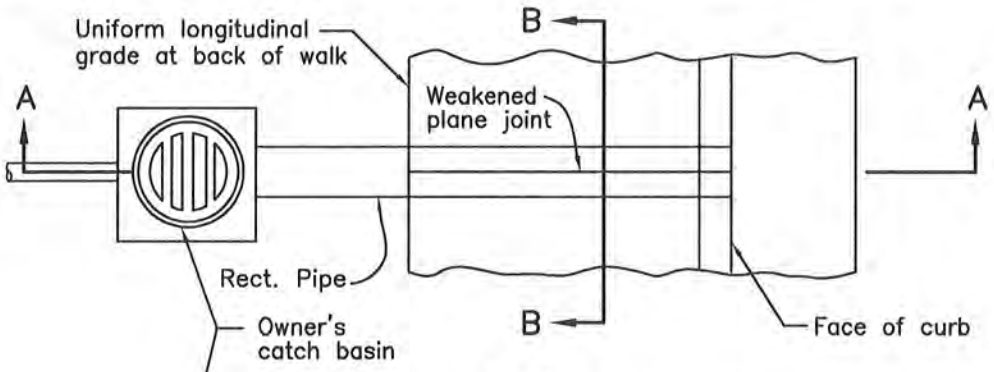

PLAN

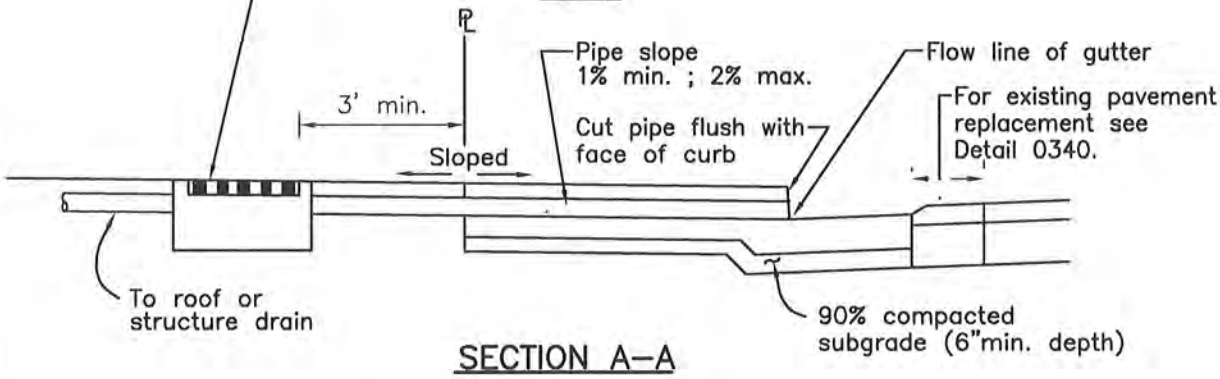

SECTION A–A

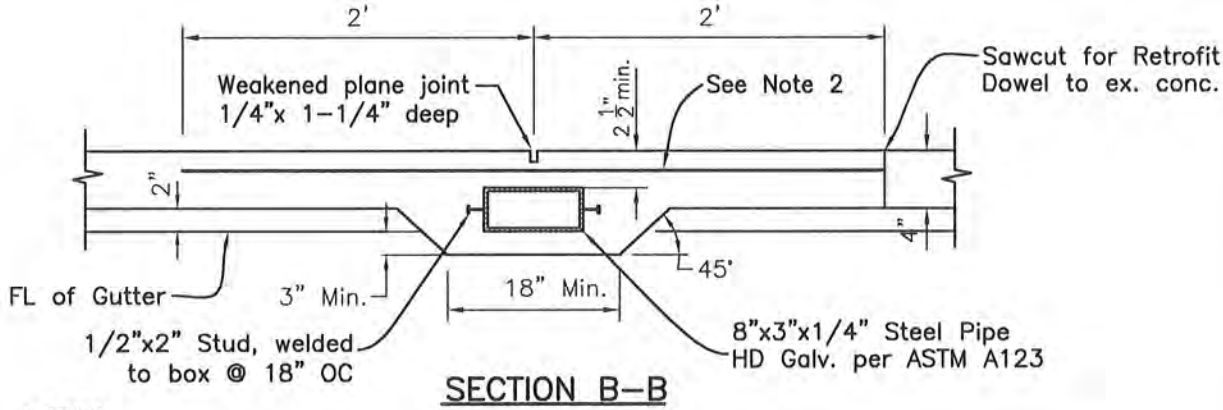

SECTION B–B

NOTES:

1. Owner is responsible for cleaning and maintaining the drain pipe on their property and under the sidewalk.
2. Place 4x4x10ga. wire mesh.
3. Under sidewalk drains require City Engineer approval. Only for use where an underground strom drain pipe isn't present, or connecting to an existing storm drain is impractical.

REVISION			
Delete 3" pipes Add 3"x8" box	CITY OF WOODLAND COMMUNITY DEVELOPMENT DEPARTMENT ENGINEERING DIVISION APPROVED BY DATE 03/23/10 BRENT MEYER, CITY ENGINEER	Under Sidewalk Drain for Private Property	0435

SCALE : N.T.S.	FILE NAME	SPEC0440.DWG

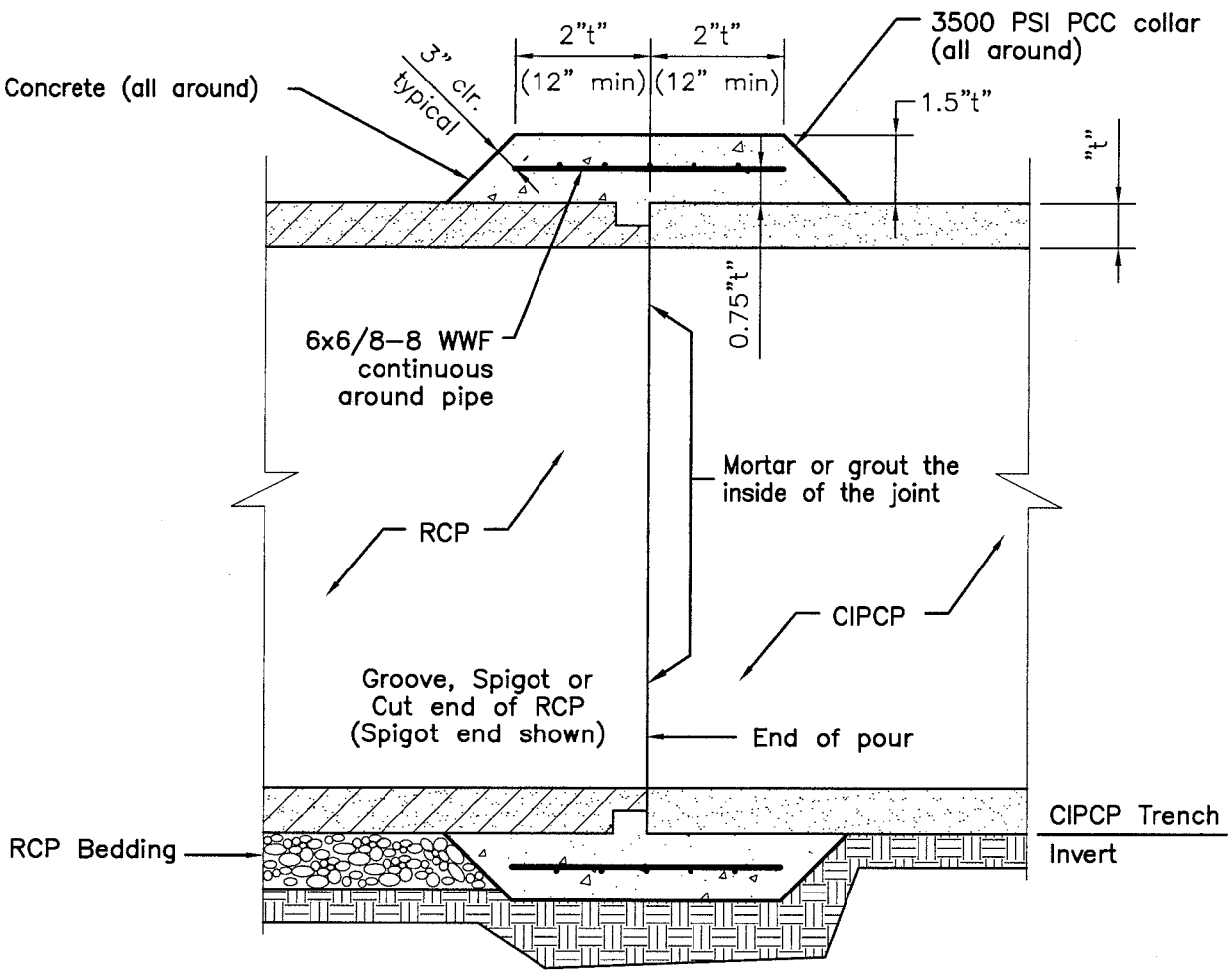

NOTES

1. To be used at connection between RCP and CIPCP. Location to be approved by engineer.
2. Construct Collar in undisturbed soil per CIPCP Specifications.
3. Mortar or grout the inside of the pipe joint.

NO.	REVISION	BY

CITY OF WOODLAND
PUBLIC WORKS DEPARTMENT
ENGINEERING DIVISION

APPROVED BY
DATE 11/05/07 DICK DONNELLY, CITY ENGINEER

REINFORCED CONCRETE CONNECTION COLLAR

0440

SCALE : n.t.s.	FILE NAME	spec0500.dwg

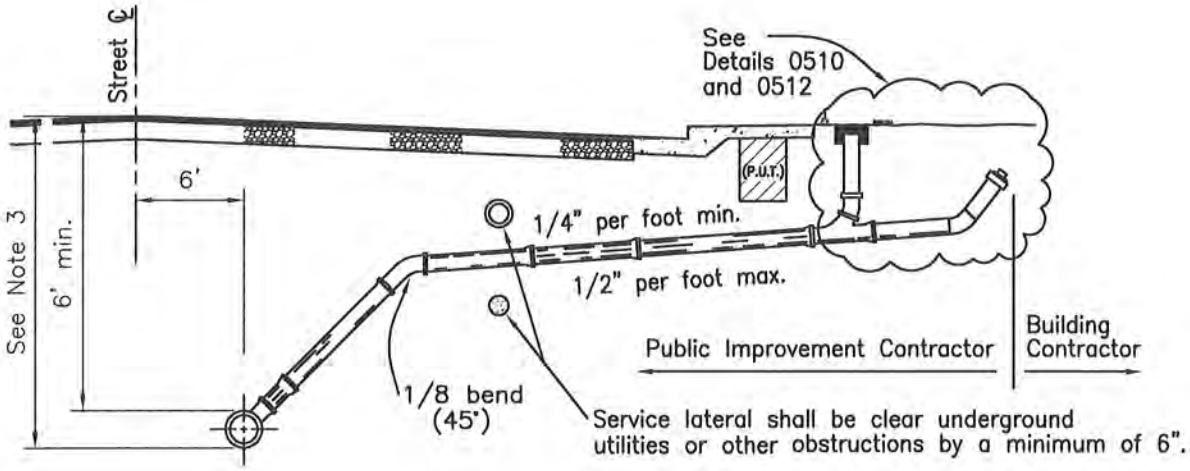

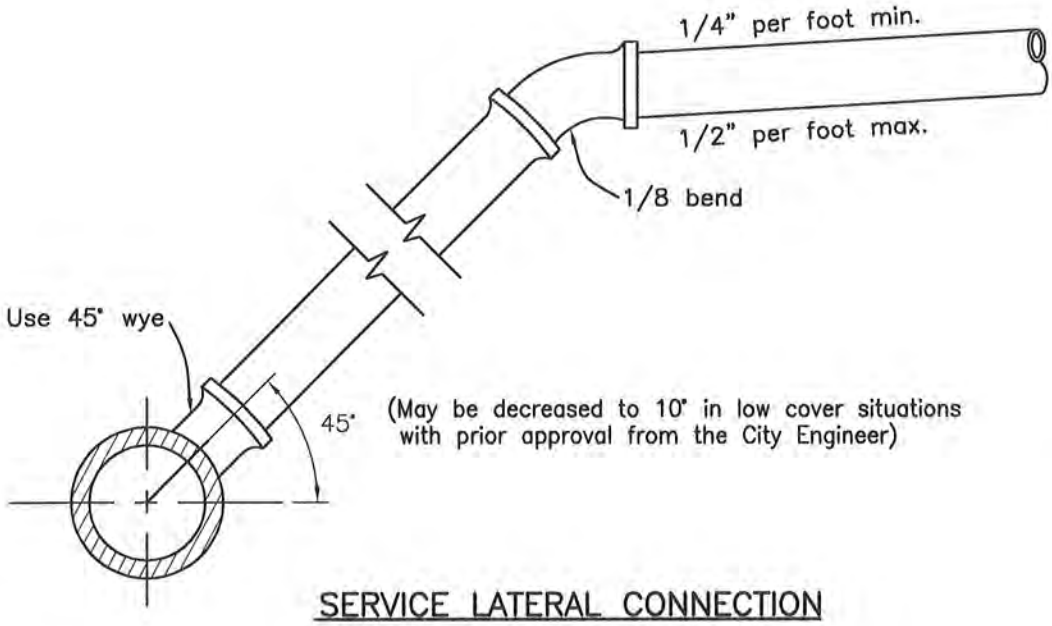

SERVICE LATERAL CONNECTION

GENERAL NOTES:

1. For connection to existing sewer main, see Detail 0522.
2. Stamp "S" in 2" letter on top of curb at service locations.
3. For maximum depth of the service lateral connections to sewer mains see Engineering Design section 5.09

REVISION			
Revise Note 1	CITY OF WOODLAND COMMUNITY DEVELOPMENT DEPARTMENT ENGINEERING DIVISION APPROVED BY DATE 03/23/10 BRENT MEYER, CITY ENGINEER	Sewer Service Lateral	0500

SCALE : n.t.s.	FILE NAME	spec0501.dwg

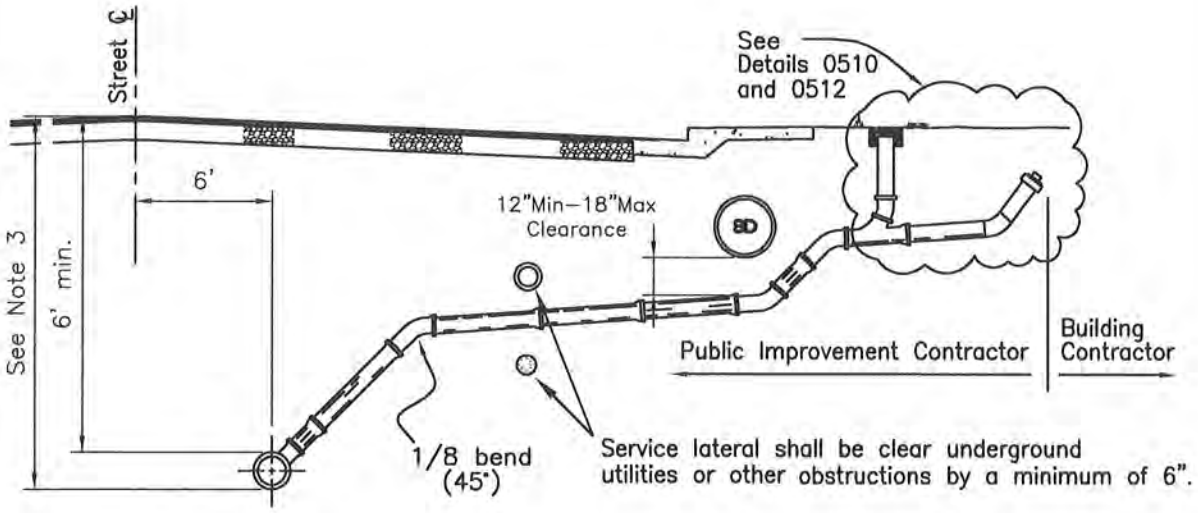

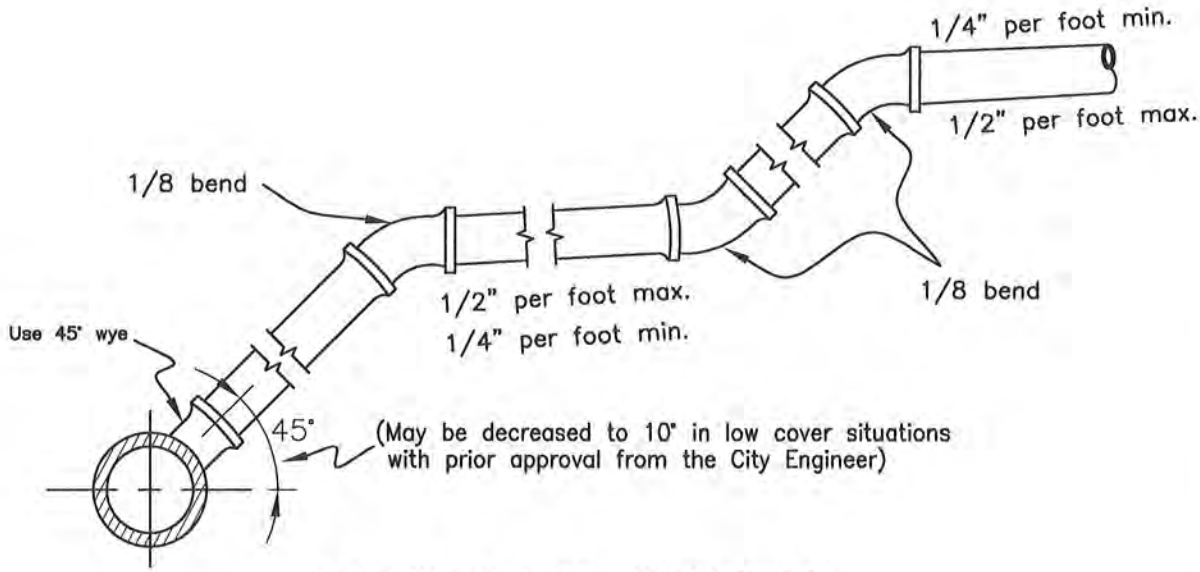

SERVICE LATERAL CONNECTION

GENERAL NOTES:

1. For connection to existing sewer main, see Detail 0522.
2. Stamp "S" in 2" letter on top of curb at service locations.
3. For maximum depth of the service lateral connections to sewer mains see Engineering Design section 5.09.
4. The use of this special sewer service lateral will be allowed with prior approval from the City Engineer.

REVISION	CITY OF WOODLAND COMMUNITY DEVELOPMENT DEPARTMENT ENGINEERING DIVISION	Special Sewer Service Lateral	0501
Revised Note 1	APPROVED BY DATE 03/23/10 BRENT MEYER, CITY ENGINEER		

SCALE : N.T.S.	FILE NAME	SPEC0505.DWG

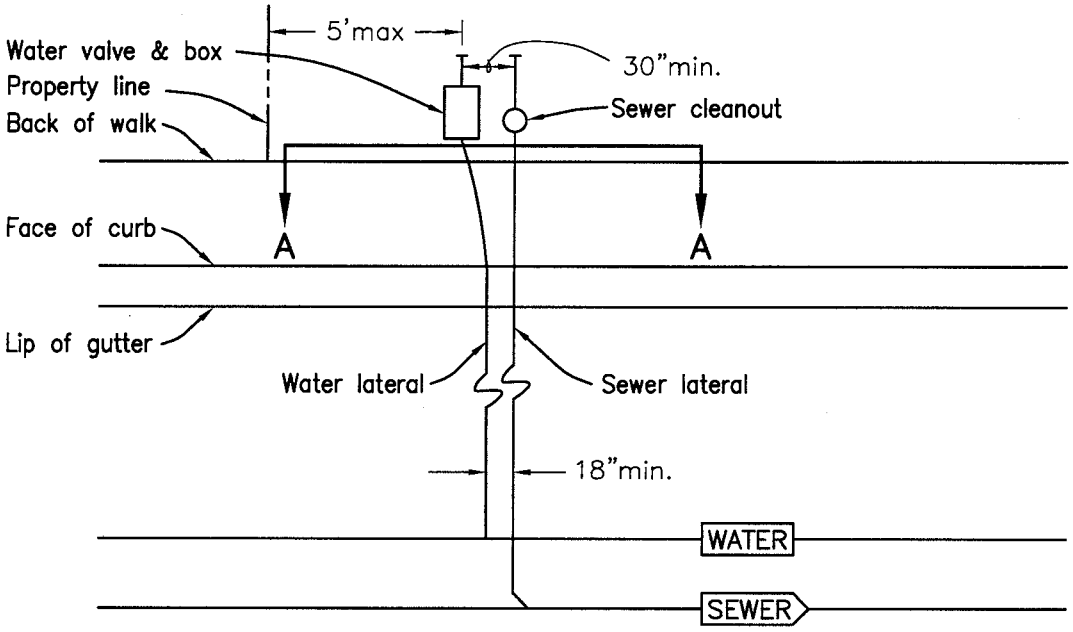

PLAN VIEW
(not to scale)

NOTE:

Water service may be skewed between face of curb and back of walk to obtain 30" min. horizontal distance (parallel to roadway) between water service valve and sewer clean-out.

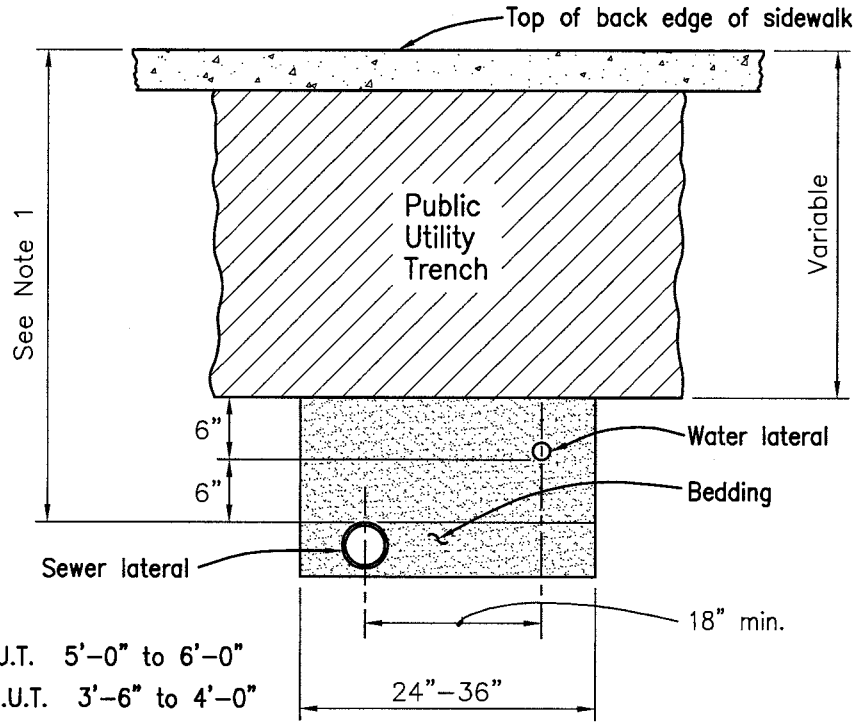

NOTE:

1. w/ P.U.T. 5'-0" to 6'-0"
   w/o P.U.T. 3'-6" to 4'-0"

SECTION A-A
(not to scale)

NO.	REVISION	BY

CITY OF WOODLAND
PUBLIC WORKS DEPARTMENT
ENGINEERING DIVISION

APPROVED BY
DATE 11/05/07 DICK DONNELLY, CITY ENGINEER

RESIDENTIAL SERVICE LATERAL TRENCH

0505

SCALE : n.t.s.	FILE NAME	spec0510.dwg

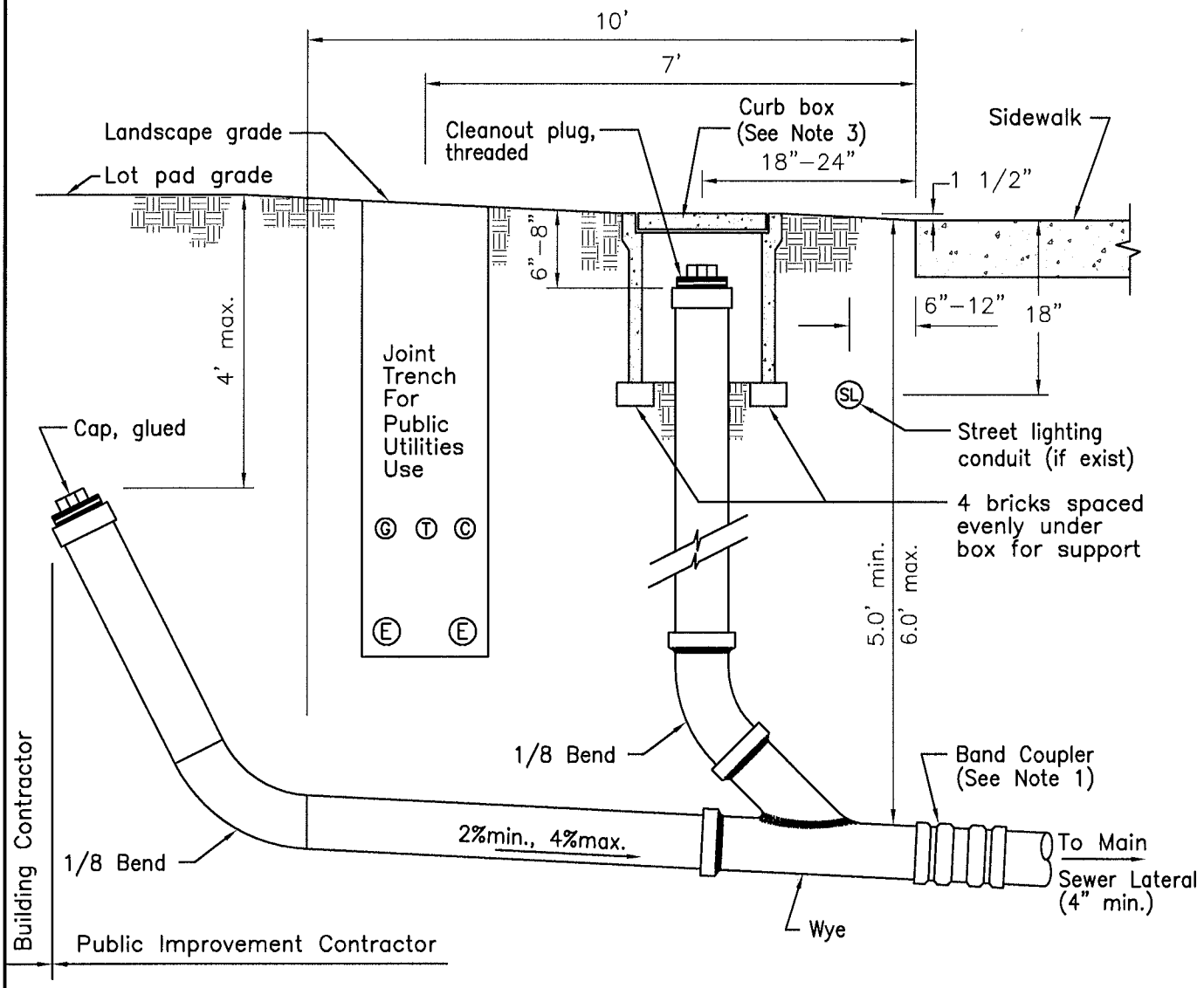

NOTES:

1. Band coupler shall be a Mission Shielded Transition Coupler, Model Number MR02–44 ARC or approved equal. Band shall have a minimum of 3 locking bands straps.
2. Cleanout materials shall be all ABS or all PVC. Sewer Lateral shall be PVC or VCP.
3. Curb box shall be as follows:
   a) In landscaped areas, use CHRISTY F8, or CARSON 910–12B box with bolt down cover or approved equal, marked "SEWER".
   b) In concrete or paved areas, use CHRISTY G5 box or approved equal, with a traffic lid marked "SEWER".
   c) Box shall be set 1–1/2" above back of walk at landscape grade.
   d) Boxes shall be provided without knock–outs.
4. In areas where the sidewalk is not monolithic with the curb, the cleanout shall be located within 18" to 24" from the back of curb or back of storm drain when there is a storm drain conflict.
5. Joint trench shall be a minimum of six (6) inches above the sanitary sewer lateral.
6. Cleanout materials shall be same diameter as lateral.
7. The use of this detail will be allowed with prior approval from the City Engineer.
8. Avoid placing curb box in driveway.

REVISION			
Allow ABS or PVC	CITY OF WOODLAND COMMUNITY DEVELOPMENT DEPARTMENT ENGINEERING DIVISION	Special Sewer Lateral and Cleanout	0510
Modify Notes 2 & 6	APPROVED BY: DATE 11/22/10 BRENT MEYER, CITY ENGINEER		

SCALE : n.t.s.	FILE NAME	spec0512.dwg

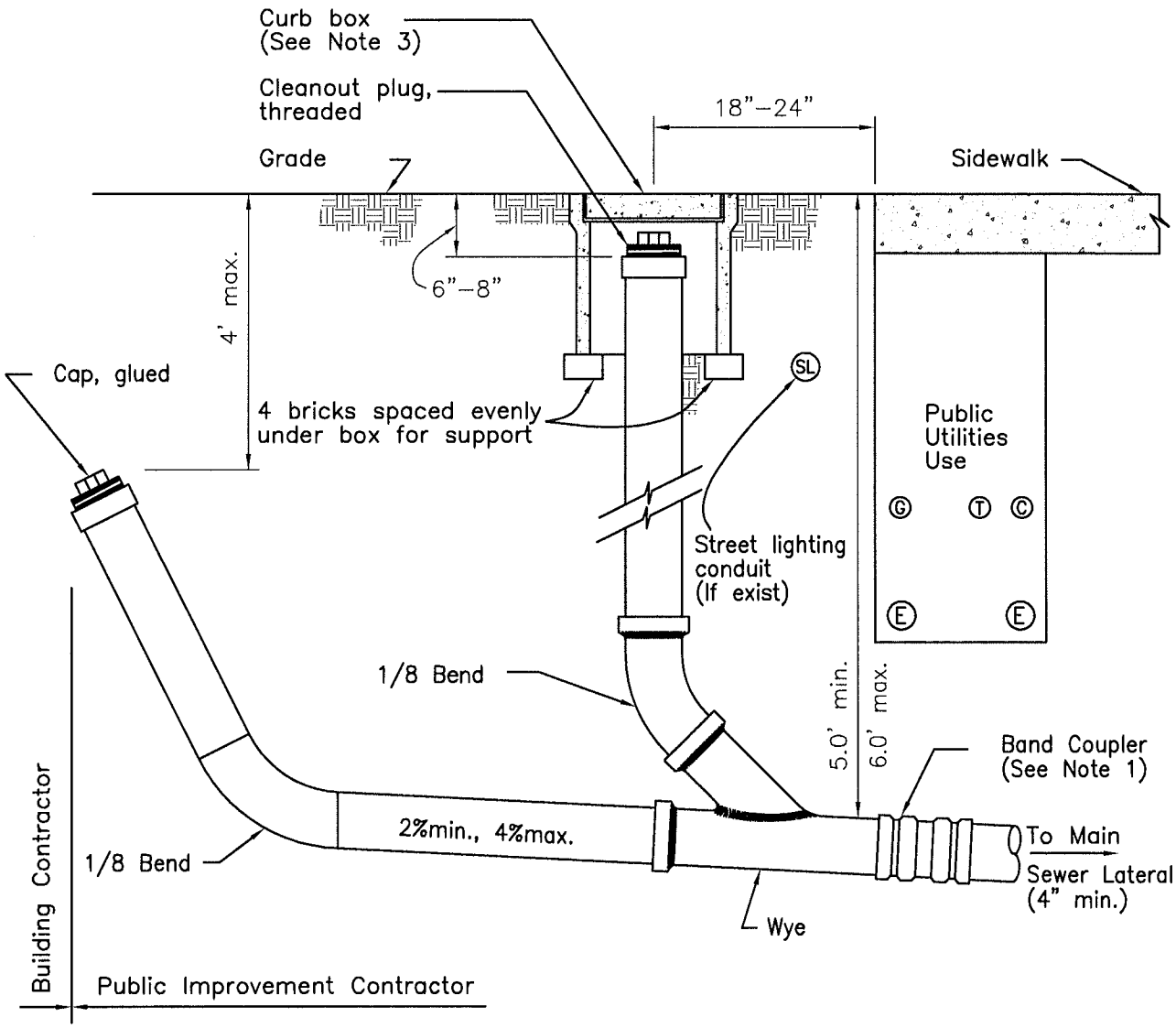

NOTES:

1. Band coupler shall be a Mission Shielded Transition Coupler, Model Number MR02–44 ARC or approved equal. Band shall have a minimum of 3 locking bands straps.
2. Cleanout materials shall be all ABS or all PVC. Sewer lateral shall be PVC or VCP.
3. Curb box
   a) In landscaped areas, use CHRISTY F–8, or CARSON 910–12B box with lock bolt cover, marked "SEWER".
   b) In concrete driveway or paved areas, use CHRISTY G–5 traffic box marked "SEWER".
   c) Alternates may be used upon written approval of City Engineer only.
   d) Boxes shall be provided without knock–outs.
4. In areas where sidewalk is not monolithic with curb, the cleanout shall be located within 18" to 24" from back of curb or back of storm drain when there is a storm drain conflict.
5. Joint trench shall be a minimum of six (6) inches above the sanitary sewer lateral.
6. Cleanout materials shall be same diameter as lateral.
7. Avoid placing curb box in driveway.

REVISION			
Allow ABS or PVC	CITY OF WOODLAND COMMUNITY DEVELOPMENT DEPARTMENT ENGINEERING DIVISION	Standard Sewer Lateral and Cleanout for Joint Trench Under Walk	0512
Revise Notes 2 & 6	APPROVED BY DATE 11/22/10 BRENT MEYER, CITY ENGINEER		

SCALE : NTS	FILE NAME	spec0513.dwg

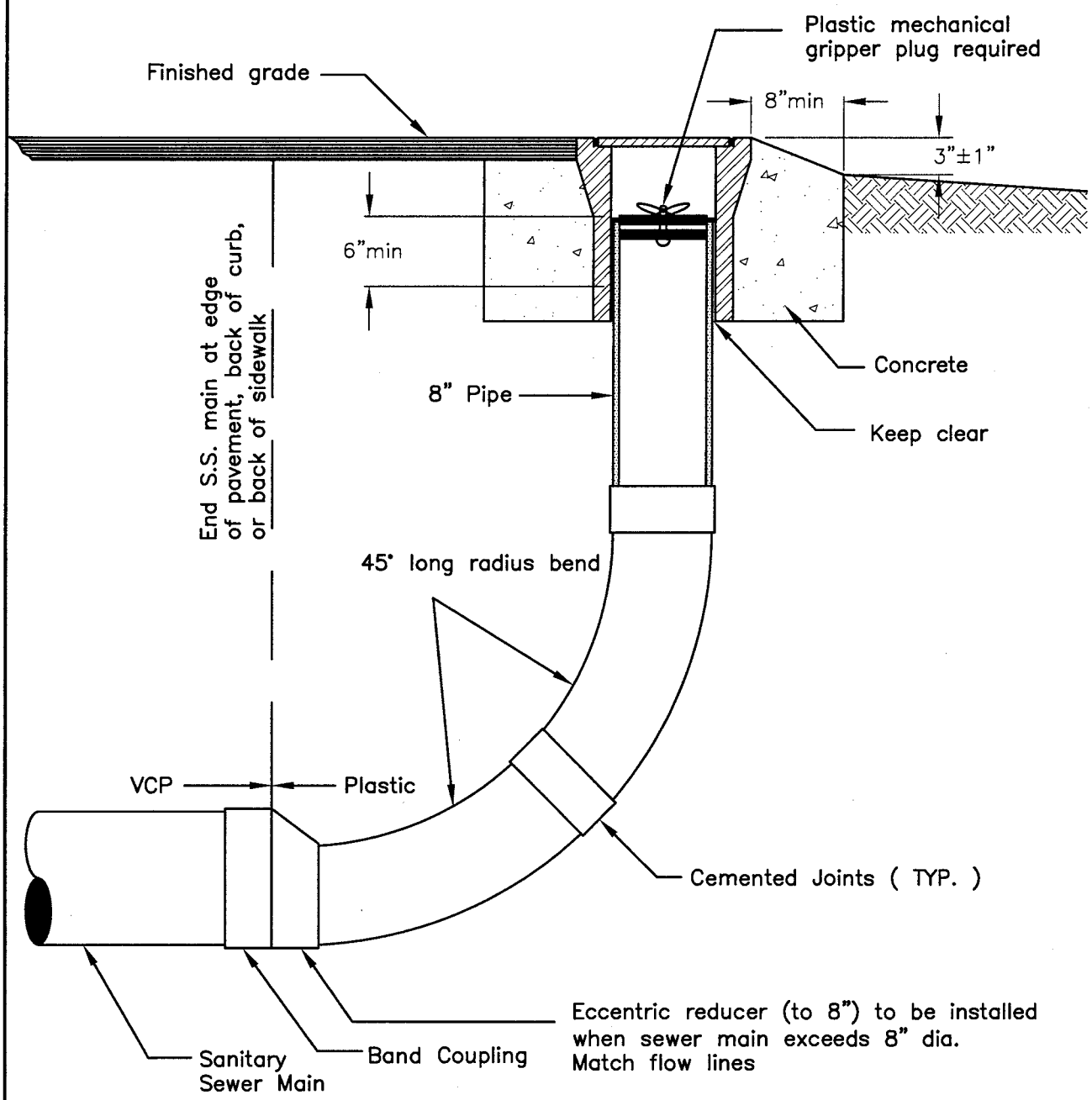

NOTES:

1. For concrete specifications see section 5 of the Materials and Construction Methods Division of these Standard Specifications.
2. To be used only where a sewer main has been stubbed out for future extension.
3. Valve box lid shall be marked "sewer"

NO.	REVISION	BY

CITY OF WOODLAND
PUBLIC WORKS DEPARTMENT
ENGINEERING DIVISION

APPROVED BY
DATE 11/05/07 DICK DONNELLY, CITY ENGINEER

TEMPORARY MAINLINE CLEANOUT

0513

SCALE : N.T.S.	FILE NAME	SPEC0515.DWG

In manhole where main pipe line turns through 90° angle, use long radius 90° V.C.P. channel section to allow pipe line to be laid continuously through manhole.

Main pipe to be laid through manhole. Top to be broken out after concrete in base has set.

For concrete specifications see Section 5 of the Materials and Construction Methods Division of these Standard Specifications.

Form channel in concrete base for lines coming in from side

Top of manhole frame to be set 1/4" below finished street surface

Manhole frame and cover to be as per Standard Detail No.0420

Maximum of two 6" grade rings.

Concrete collar to extend 6" onto cone

Place mortar band at joint – minimum 1/2"x4"

Ramneck (SP) or other water tight material

One, two and three foot lengths are optional

5" precast or 6" cast-in-place concrete

Full pipe depth "U" shape channel

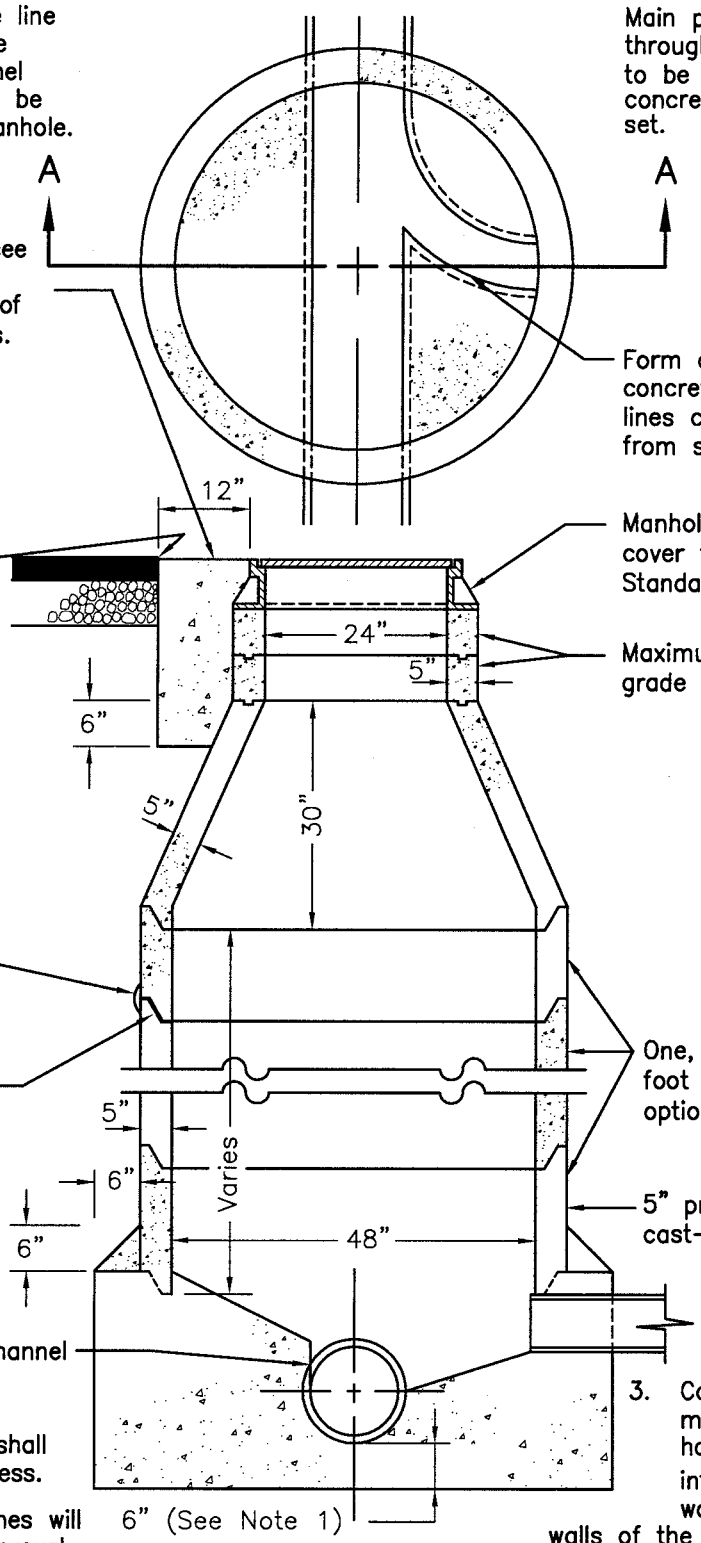

SECTION A–A

NOTES:

1. Precast manhole bases shall have 5" minimum thickness.
2. The use of eccentric cones will be allowed with prior approval from the City Engineer.
3. Cast in place manhole bases shall have fully formed interior and exterior walls. Pouring the walls of the base against the wall of the excavation shall not be permitted.

NO.	REVISION	BY

CITY OF WOODLAND
PUBLIC WORKS DEPARTMENT
ENGINEERING DIVISION

APPROVED BY
DATE 11/05/07 DICK DONNELLY, CITY ENGINEER

STANDARD SEWER MANHOLE

0515

SCALE : N.T.S.	FILE NAME	SPEC0518.DWG

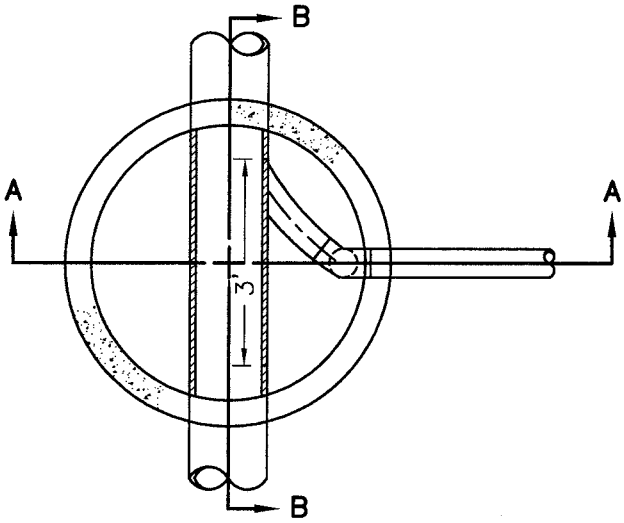

PLAN

NOTES:

1. This installation shall be used on existing manholes only where the difference in elevation between the top of the outlet pipe and the invert of the feeder or collector sewer exceeds 24".
2. Band coupler shall be a Mission Shielded Transition Coupler, Model Number MR02–44 or approved equal. Band shall have a minimum of 3 locking bands straps.

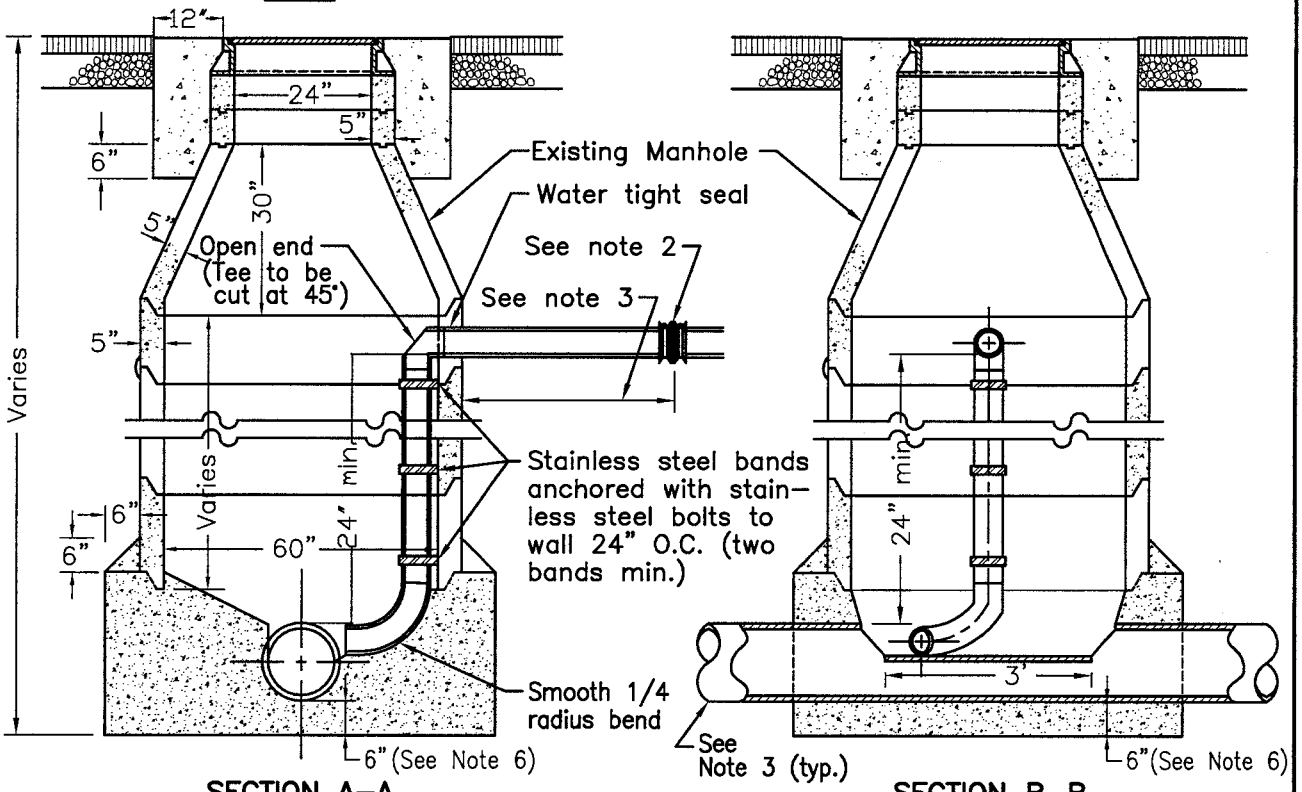

SECTION A–A

SECTION B–B

NOTES:

3. 12" max for 8" to 12" or larger pipe. 24" max. for pipes less than 8".
4. This detail shall only be used for drop pipes 12" or less. Larger pipes require individual design and approval by the City Engineer.
5. PVC or ABS pipe must be used inside manhole.
6. Precast manhole bases shall have 5" minimum thickness.
7. Cast in place manhole bases shall have fully formed interior and exterior walls. Pouring the walls of the base against the wall of the excavation shall not be permitted.

NO.	REVISION	BY

CITY OF WOODLAND
PUBLIC WORKS DEPARTMENT
ENGINEERING DIVISION

APPROVED BY
DATE 11/05/07 DICK DONNELLY, CITY ENGINEER

INSIDE SANITARY SEWER DROP MANHOLE

0518

SCALE : N.T.S.	FILE NAME	SPEC0522.DWG

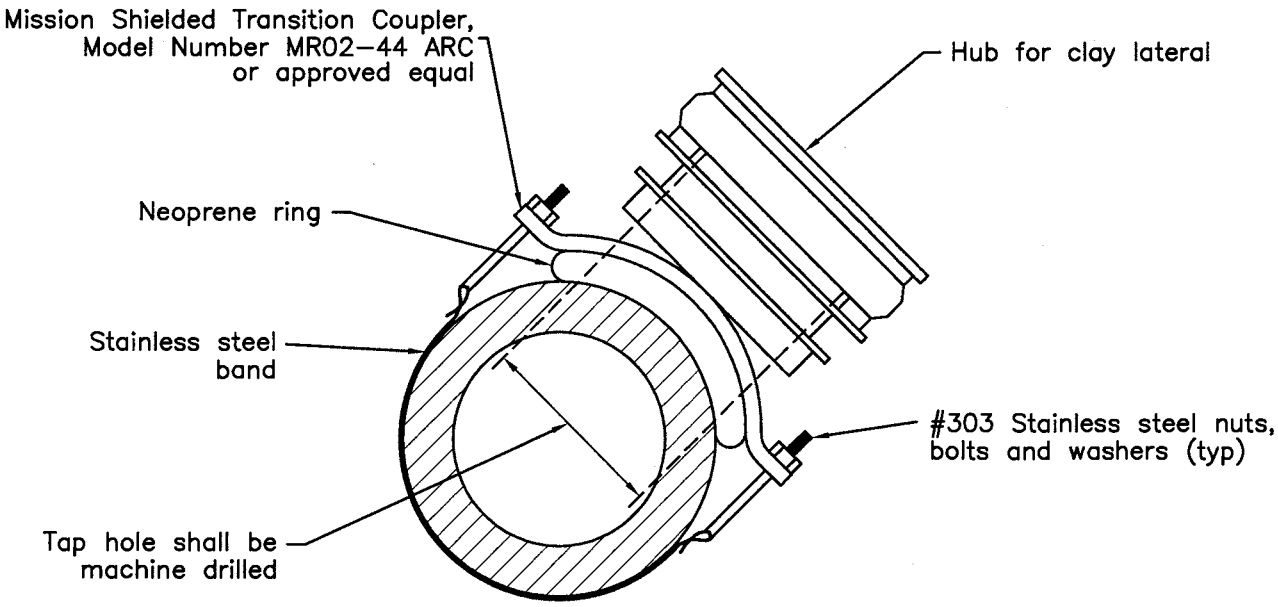

STRAP–ON TYPE

NOTES

1. The tap shall be performed by the City. All preparations, excavations, shoring and backfill shall be performed by the contractor.
2. No tap shall be allowed into existing sewer less than 6"ø.
3. Use of prefabricated wyes and tees must be approved by the Engineer.
4. Tapping method shall be "Fowler Quick Way" or equal, approved by the City Engineer.
5. See Standard Detail 0500 for Sewer Service Lateral.
6. This tap shall be used only on existing Sewer Mains. In new construction, wyes are to be used for all connections.
7. Service laterals require a manhole where adjacent manhole spacing exceeds 500 feet.

NO.	REVISION	BY

CITY OF WOODLAND
PUBLIC WORKS DEPARTMENT
ENGINEERING DIVISION

APPROVED BY
DATE 11/05/07 DICK DONNELLY, CITY ENGINEER

SEWER LINE TAPS

0522

{Blank Page}

SCALE :	FILE NAME	spec0700.dwg

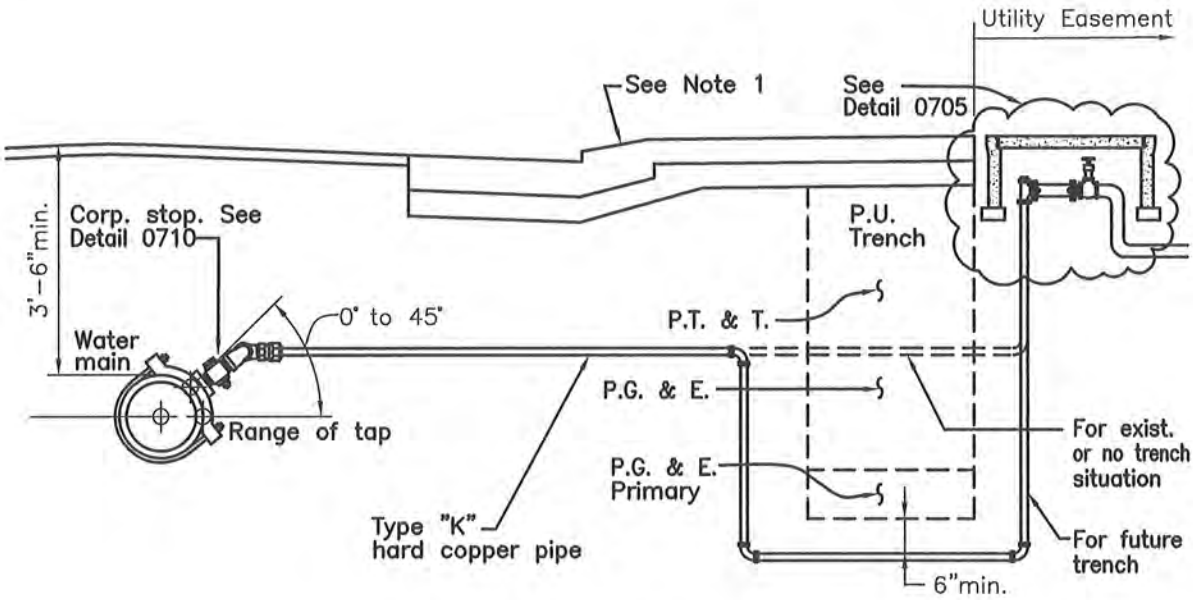

SIDEWALK

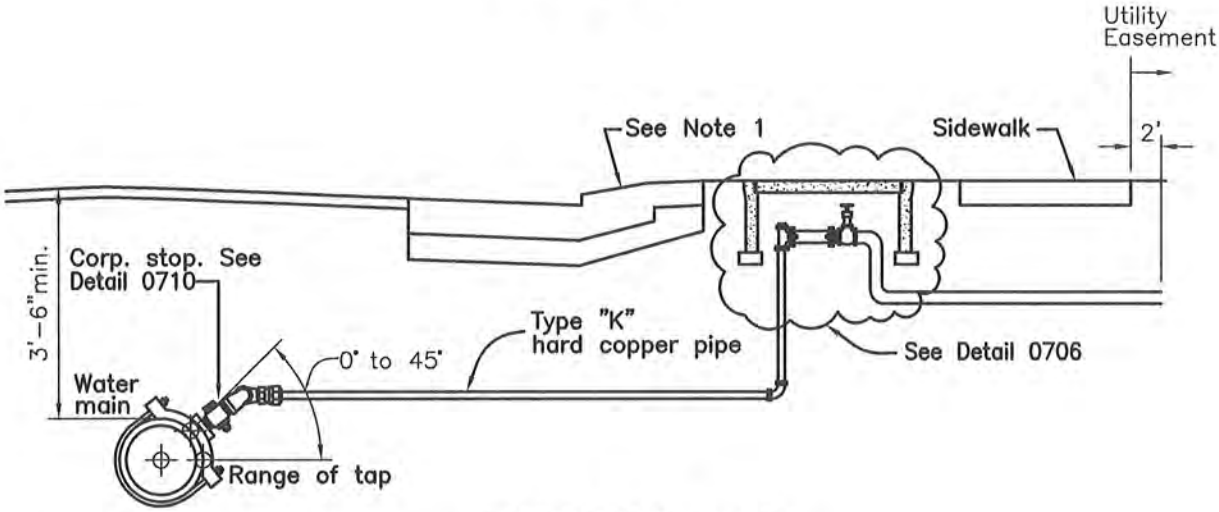

LANDSCAPED STRIP

NOTES:

1. Provide 2" high "W" stamped in top of curb to identify water service location.
2. Use compression fittings at al joints and angle points.
3. See other standard details for additional requirements.
4. Provide 36" minimum clearance to finish grade for service under pavement.
5. Avoid placing meter box in driveway.

REVISION			
Delete 1" size	CITY OF WOODLAND COMMUNITY DEVELOPMENT DEPARTMENT ENGINEERING DIVISION APPROVED BY DATE 12/12/11 BRENT MEYER, CITY ENGINEER	1-1/2" and 2" Water Service Meter Box Location	0700

SCALE :	FILE NAME	spec0705.dwg

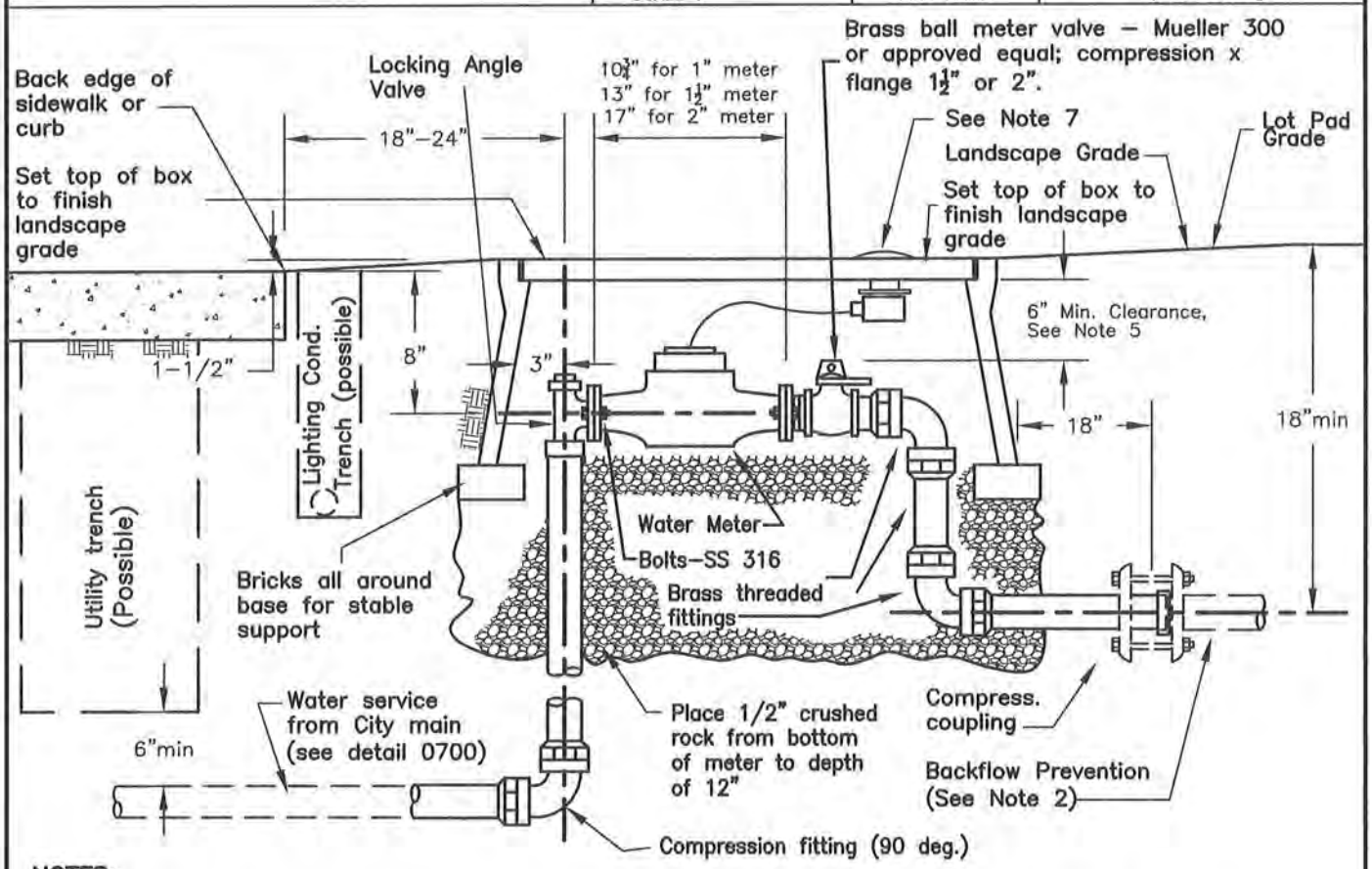

NOTES:

1. Each single family and duplex dwelling unit shall have 1–1/2" water service line. Meter size may be reduced to 1" at the discretion of the City Engineer. Meter size shall be based on expected flow rate (See Section 7, Design Stds.). Provide pair of adapters to allow for adjustment of 1" meter to 1–1/2" tapped meter size and length (Ford Meter Co. Catalog #A46) or approved equal.
2. Backflow prevention devices are required for all domestic services to nonresidential properties and for residential services with access to a private well. See Standard Detail No. 0760.
3. Electrical isolation between meter and building(s) is required (Plastic house service suffices).
4. 1" water meters shall be Sensus SR–II water meters. 1–1/2" & 2" water meters shall be Sensus SR water meters.
5. Check meter height clearances for top of meter to bottom of box lid:
   a. Must clear transceiver unit height
   b. Must clear valve stem height
   c. 1" minimum clearance between transceiver unit and ball valve and electronic register.
6. Electronic register or transceiver unit shall not contact any underlying meter, valve or piping components.
7. Install a Sensus Model 520X single port transceiver unit. Where meter boxes are adjacent, a Sensus Model 520X dual port transceiver unit set may be shared between the two meters (see Standard Detail 0708).
8. See Standard Detail No. 0708 for dual site installation.
9. Avoid Meter box placement in driveway.

REVISION	CITY OF WOODLAND COMMUNITY DEVELOPMENT DEPARTMENT ENGINEERING DIVISION	1–1/2" and 2" Water Service, Meter, Valve & Box at Back of Walk	0705
Delete 1" size service	APPROVED BY DATE 12/12/11 BRENT MEYER, CITY ENGINEER		

SCALE :	FILE NAME	spec0706.dwg

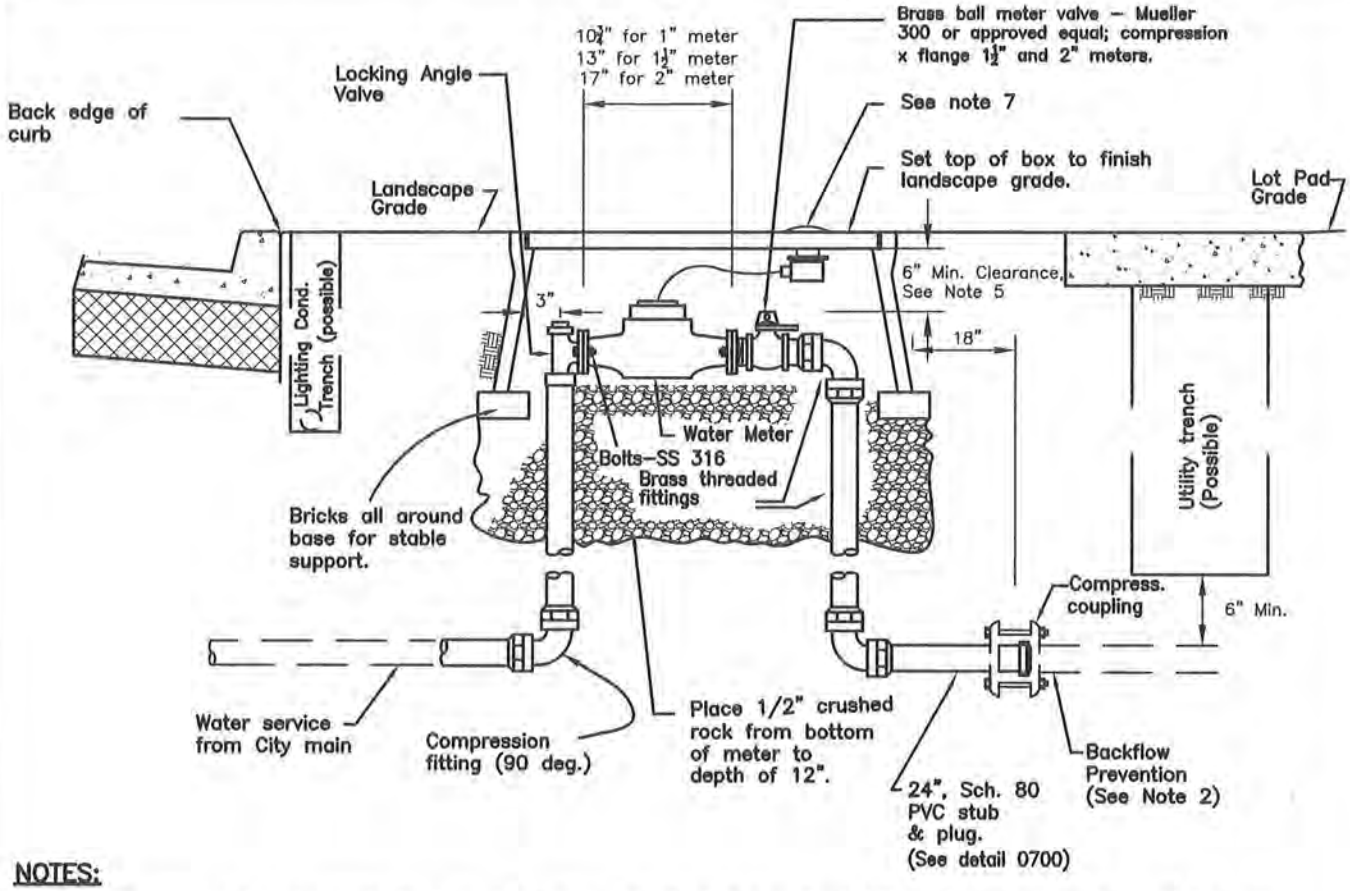

NOTES:

1. Each single family and duplex dwelling unit shall have 1–1/2" water service line. Meter size may be reduced to 1" at the discretion of the City Engineer. Meter size shall be based on expected flow rate (See Section 7, Design Stds.). Provide pair of adapters to allow for adjustment of 1" meter to 1–1/2" tapped meter size and length (Ford Meter Co. Catalog #A46) or approved equal.
2. Backflow prevention devices are required for all domestic services to nonresidential properties and for residential services with access to a private well. See Standard Detail No. 0760.
3. Electrical isolation between meter and building(s) is required (Plastic house service suffices).
4. 1" water meters shall be Sensus SR–II water meters. 1–1/2" & 2" water meters shall be Sensus SR water meters.
5. Check meter height clearances for top of meter to bottom of box lid:
   a. Must clear transceiver unit height
   b. Must clear valve stem height
   c. 1" minimum clearance between transceiver unit and ball valve and electronic register.
6. Electronic register or transceiver unit shall not contact any underlying meter, valve or piping components.
7. Install a Sensus Model 520X single port transceiver unit. Where meter boxes are adjacent, a Sensus Model 520X dual port transceiver unit set may be shared between the two meters (see Standard Detail 0708).
8. See Standard Detail No. 0708 for dual site installation.
9. Place meter box in center of planter area and not in driveway.

REVISION	CITY OF WOODLAND COMMUNITY DEVELOPMENT DEPARTMENT ENGINEERING DIVISION	1–1/2" and 2" Water Service, Meter, Valve & Box in Planter Strip	0706
Delete 1" service size	APPROVED BY DATE 12/12/11 BRENT MEYER, CITY ENGINEER		

SCALE :	FILE NAME	spec0707.dwg

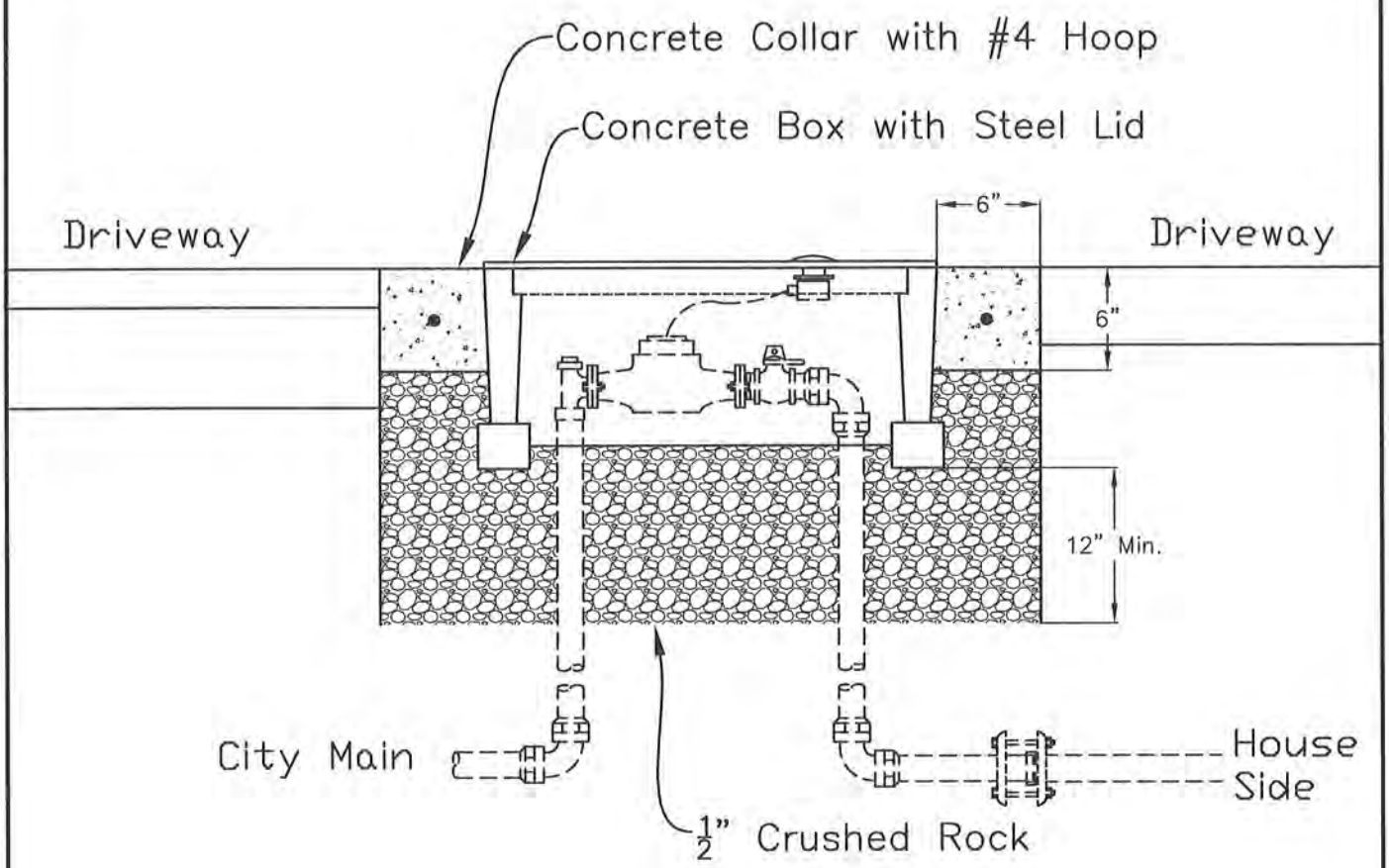

NOTES:

1. See Details 0705, 0706 or 0708 as appropriate for water meter and service line installation requirements.
2. For single family residential driveway use only.
3. Plastic boxes not allowed.
4. AMR devices that project above the rim of the lid are not allowed in accessible pedestrian paths of travel.

REVISION			
New Detail	CITY OF WOODLAND COMMUNITY DEVELOPMENT DEPARTMENT ENGINEERING DIVISION APPROVED BY DATE 05/13/11 BRENT MEYER, CITY ENGINEER	Water Meter Box in Residential Driveways	0707

SCALE :	FILE NAME	spec0708.dwg

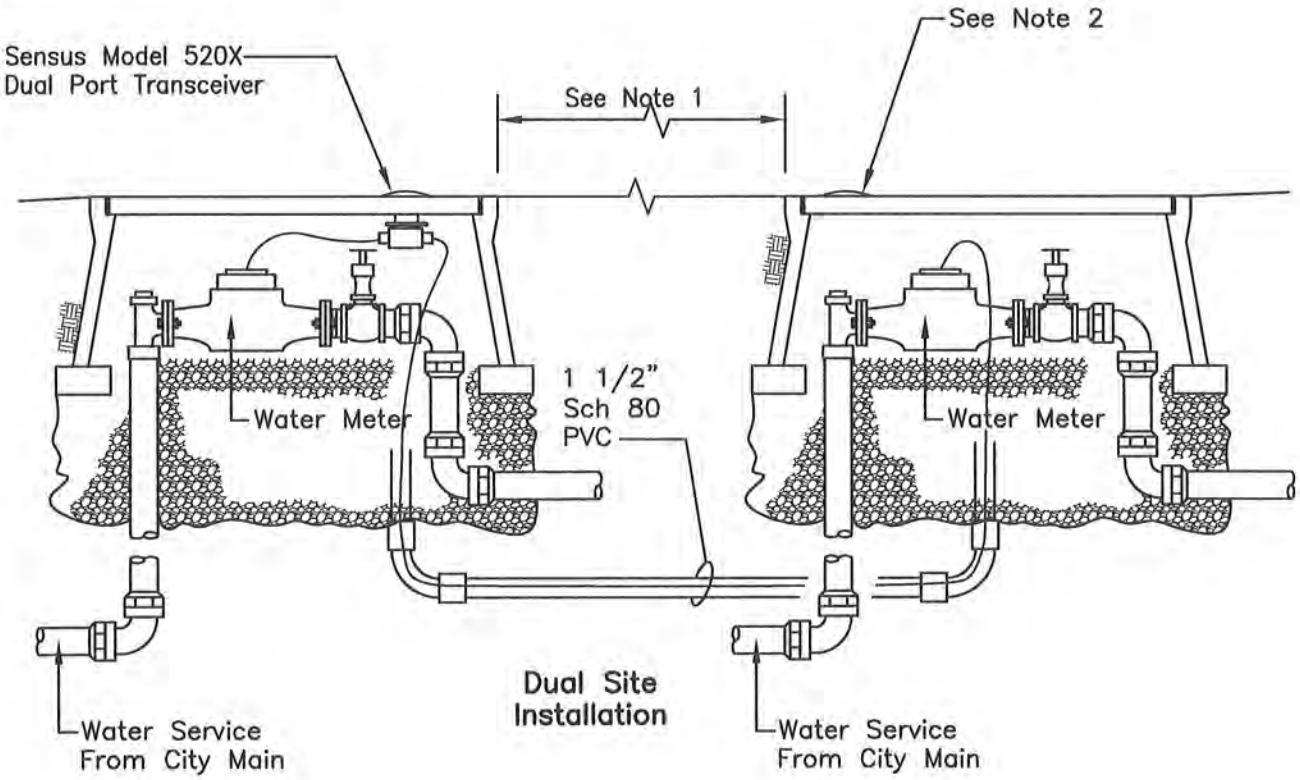

Dual Site Installation

NOTES:

1. Dual site installations are applicable to separate meter sites that meet the following criteria:
   - Meter boxes are less than 10' apart.
   - Meter boxes are on even grade.
   - Meter boxes have no physical barriers between the two boxes.
   - install conduit in public R/W or P.U.E.
2. If applicable, install plug in Touch Read or AMR holes.
3. See Standard Detail No. 0705 and 0706 for meter box location and additional information.

REVISION			
Rev AMR spec	*CITY OF WOODLAND* COMMUNITY DEVELOPMENT DEPARTMENT ENGINEERING DIVISION	A.M.R. Water Meter Dual Site Installation	0708
Delete Touch Read	APPROVED BY DATE 05/13/11 BRENT MEYER, CITY ENGINEER		

SCALE : nts	FILE NAME	spec0700.dwg

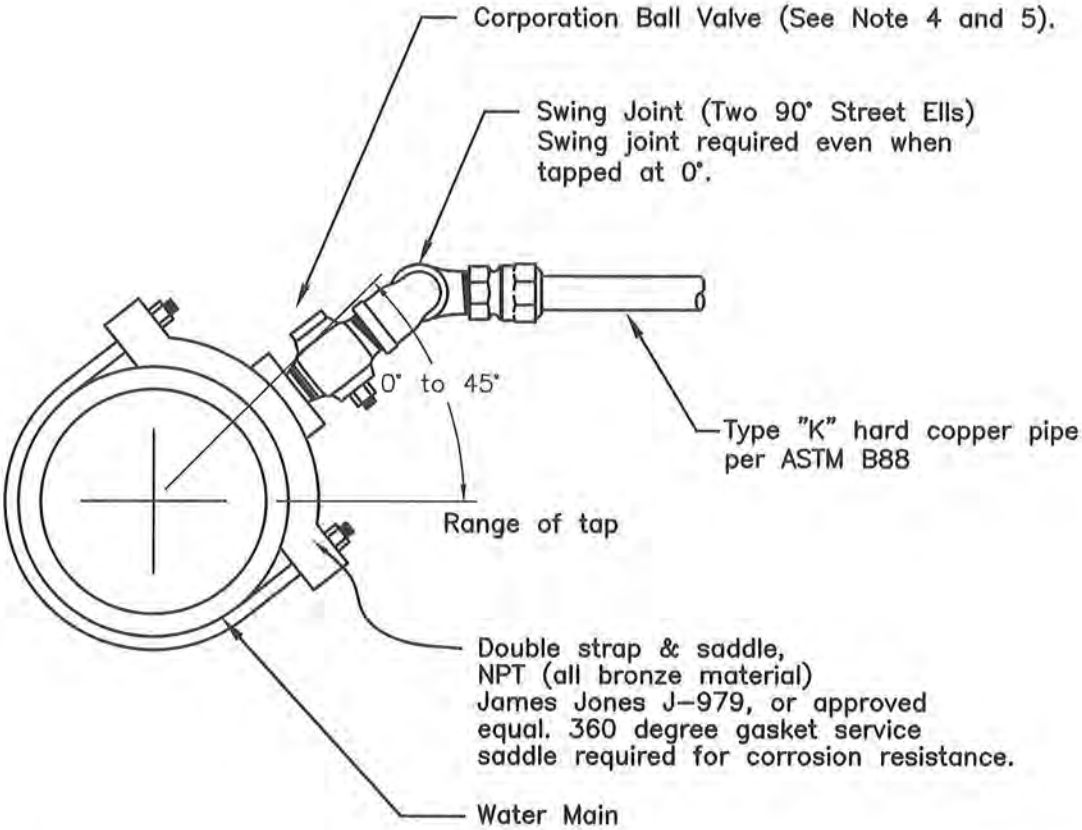

NOTES:

1. Taps to existing water main to made by City at owner's expense. Owner to perform all excavation, preparation and backfill.
2. Taps to new water mains shall be made by the owners contractor. Taps shall be made prior to connecting new water mains to the existing city system.
3. Fittings as required to connect from saddle to copper service line. Use compression fittings and all brass materials.
4. Wrap insulator and adjacent piping at least 3 feet in both directions per AWWA C105 & C209. Wrap corp. ball valve per AWWA C217.
5. For 1-1/2" and 2" corp. ball valves, use James Jones J-1943 or approved equal.

REVISION			
Delete 1" service size	CITY OF WOODLAND COMMUNITY DEVELOPMENT DEPARTMENT ENGINEERING DIVISION APPROVED BY DATE 12/12/11 BRENT MEYER, CITY ENGINEER	1-1/2" and 2" Water Service Taps	0710

SCALE : N.T.S.	FILE NAME	SPEC0712.DWG

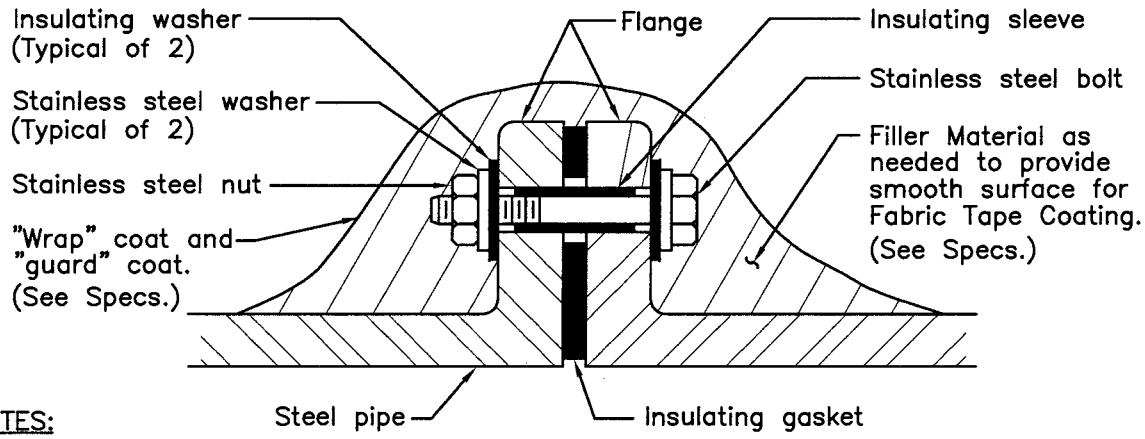

NOTES:

1. Gasket shall be for water service and be of same pressure rating as the flange.
2. For buried insulating joints apply the coating system as shown above.
3. Install in service lateral.

BELOW GRADE INSULATING JOINT COATING

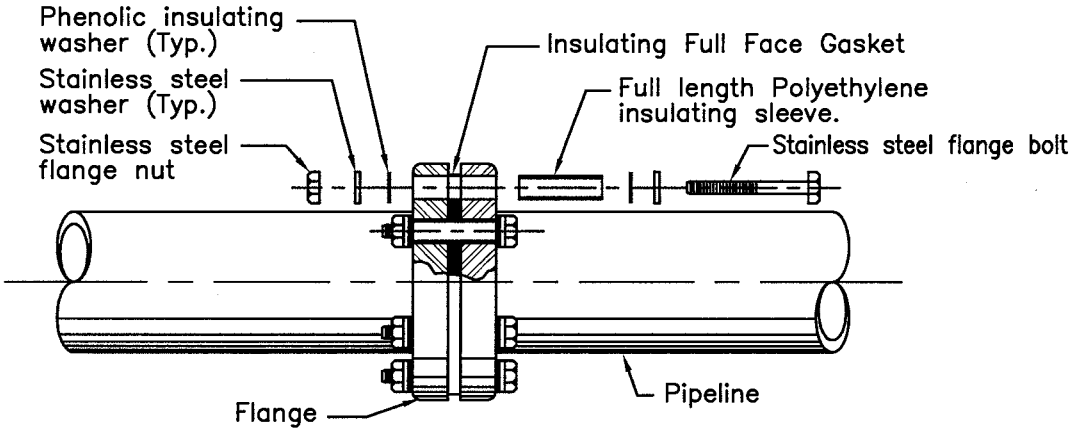

NOTES:

1. Delete coating if flange is located above grade or in vaults.
2. Install in a flange at meter or backflow assembly.
3. All nuts and bolts shall be stainless steel.

ABOVE GRADE INSULATING JOINT

NOTES:

Insulating flange kits shall be used to insulate City water system electrically from private buildings and water systems. The insulating flanges shall be installed in the manner and with the materials as indicated in the Detail. The gasket shall be manufactured out of a material indicated by the manufacturer as suitable for domestic water. The complete assembly shall have an AWWA pressure rating equal to that of the flanges between which it is installed.

Flange Kit Installation instructions are as follows:

A. Clean dirt, grease, oil, and other foreign material from insulating components immediately prior to assembly.

B. Properly align bolt holes in mating flanges at the time bolts and insulating sleeves are inserted to prevent damage to the insulation.

C. After flange bolts have been tightened, inspect each insulating washer for cracks or other damage.

D. Replace damaged washers.

NO.	REVISION	BY

CITY OF WOODLAND
PUBLIC WORKS DEPARTMENT
ENGINEERING DIVISION

APPROVED BY
DATE 11/05/07 DICK DONNELLY, CITY ENGINEER

INSUL. FLANGE, KIT– FLANGED WATER SVCS. 1–1/2" AND LARGER

0712

SCALE : n.t.s.	FILE NAME	spec0715.dwg

NOTES:

1. All backfill shall conform to Standard Specifications.
2. All fittings shall be ductile iron.
3. Taps to existing City water mains shall be made by City at the expense and upon the request of the property owner. Connections to new water main by Contractor.
4. Meter & meter box shall be supplied and installed by Building Contractor at the time of building construction.
5. Approved backflow prevention assemblies are required on all domestic services on non-residential properties, and for all services to properties with access to a water supply other than the City's, including private groundwater wells.
6. Plug all openings in box against soil or mud inflow.

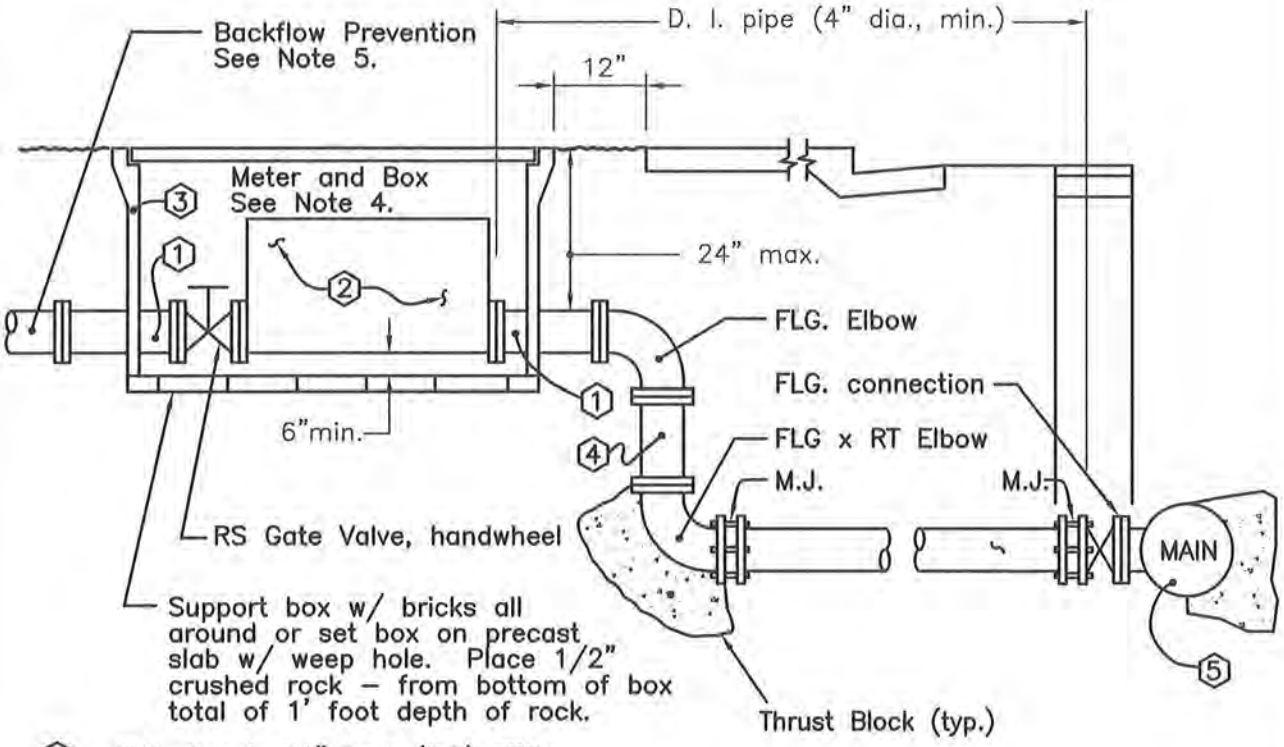

1. FLG. Spool, 24" long (D.I.) Fitting to suit Meter Installation.
2. Water Meter and AMR device (See Note 4. above)
3. Water Meter Box (Traffic lids shall be used in applicable areas). See Note 4.
4. FLG. Spool, lengths as needed (optional) (D.I.)
5. Use Tapping Tee and Tapping Gate Valve for connection to existing water main. See Note 3.
6. Insulating flange kits on both sides of water meter. See Detail 0712.

REVISION	CITY OF WOODLAND COMMUNITY DEVELOPMENT DEPARTMENT ENGINEERING DIVISION	4" and Larger Domestic Metered Water Service	0715
Revised valve spec	APPROVED BY DATE 12/12/11 BRENT MEYER, CITY ENGINEER		

SCALE : n.t.s.	FILE NAME	spec0720.dwg

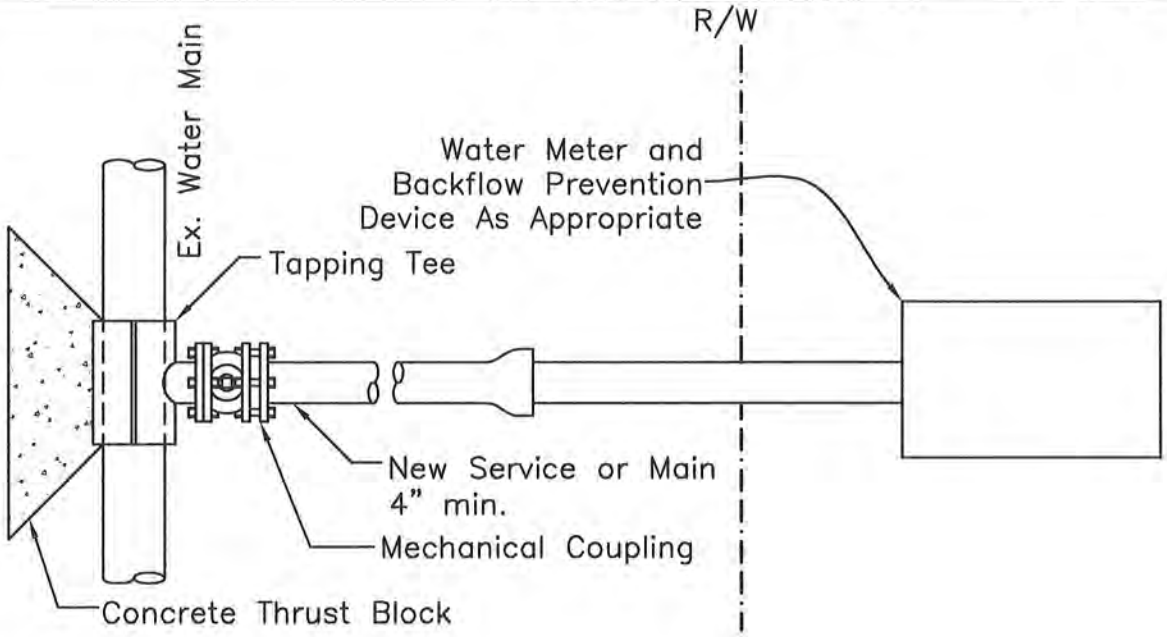

Hot–Tap Notes:

1. Contractor to perform all excavation, backfill and surface repair. Contractor to provide all materials.
2. City to perform hot–tap of existing main.

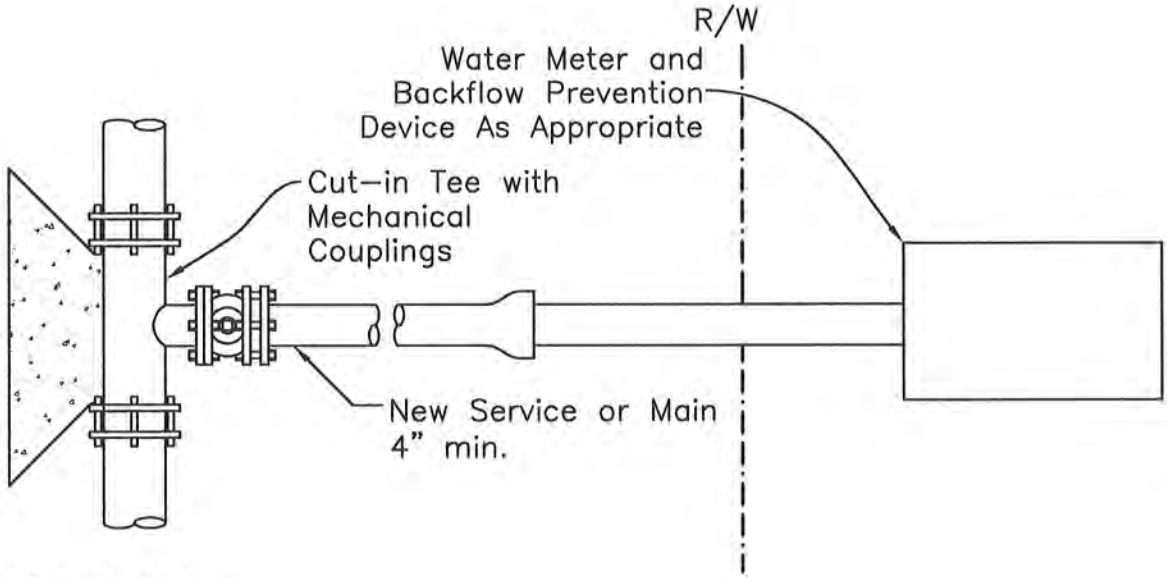

Cut–In Notes:

1. Contractor to perform all work.
2. Contractor to coordinate shut down of water main with City and all affected users.

REVISION			
Revise for hot tap	CITY OF WOODLAND COMMUNITY DEVELOPMENT DEPARTMENT ENGINEERING DIVISION APPROVED BY DATE 03/23/10 BRENT MEYER, CITY ENGINEER	4" and Larger Water Connections to Existing Water Main	0720

SCALE : N.T.S.	FILE NAME	SPEC0725.DWG

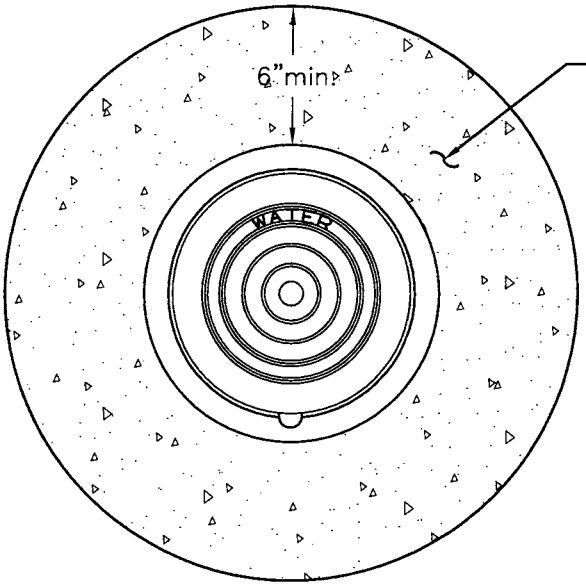

For concrete specifications see Section 5 of the Materials and Construction Methods Division of these Standard Specifications.

Christy G5 or G3 Traffic Valve Box or approved equal. With lid marked "WATER".

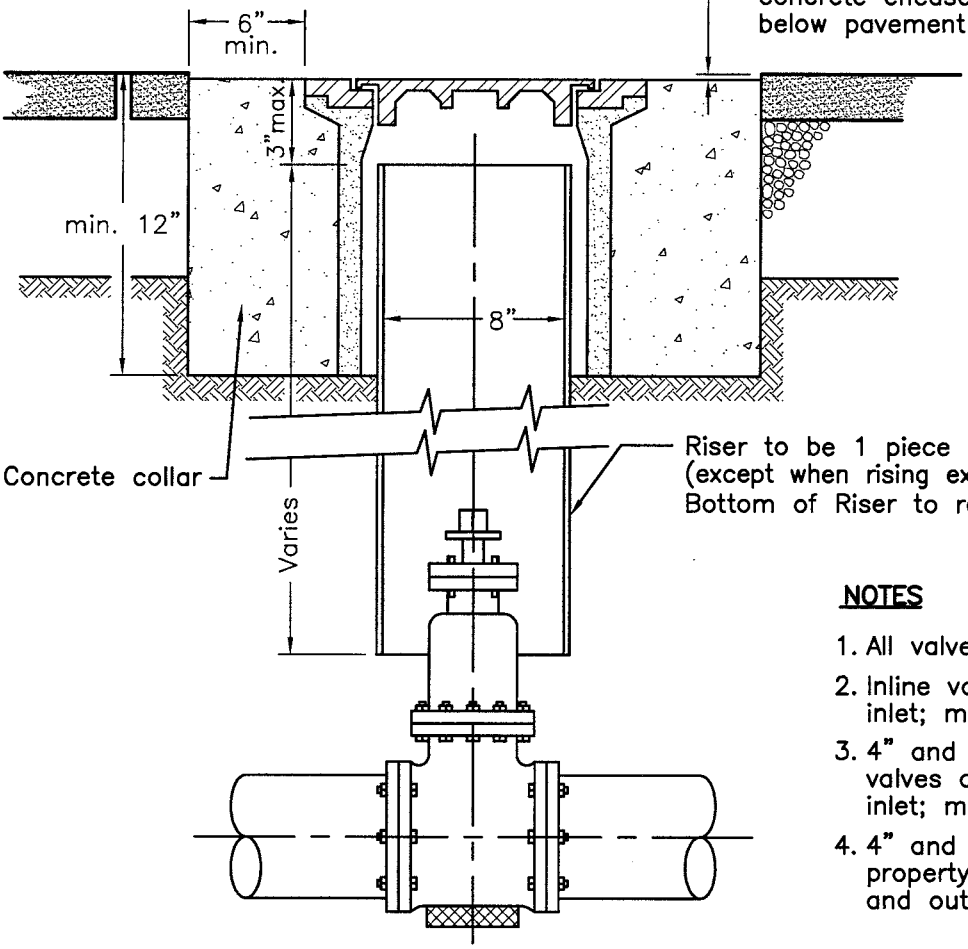

Set water valve box & concrete encasement 1/4" below pavement surface

Concrete collar

Riser to be 1 piece PVC (except when rising existing), min. Sch. 80. Bottom of Riser to rest on Valve Bonnet.

NOTES

1. All valves AWWA C–509
2. Inline valve: mechanical joint inlet; mechanical joint outlet
3. 4" and larger water service valves at water main. Flanged inlet; mechanical joint outlet.
4. 4" and larger water valve at property line. Flanged inlet and outlet.

NO.	REVISION	BY

CITY OF WOODLAND
PUBLIC WORKS DEPARTMENT
ENGINEERING DIVISION

APPROVED BY
DATE 11/05/07 DICK DONNELLY, CITY ENGINEER

WATER VALVE & VALVE BOX IN PAVED AREAS

0725

SCALE : n.t.s.	FILE NAME	spec0727.dwg

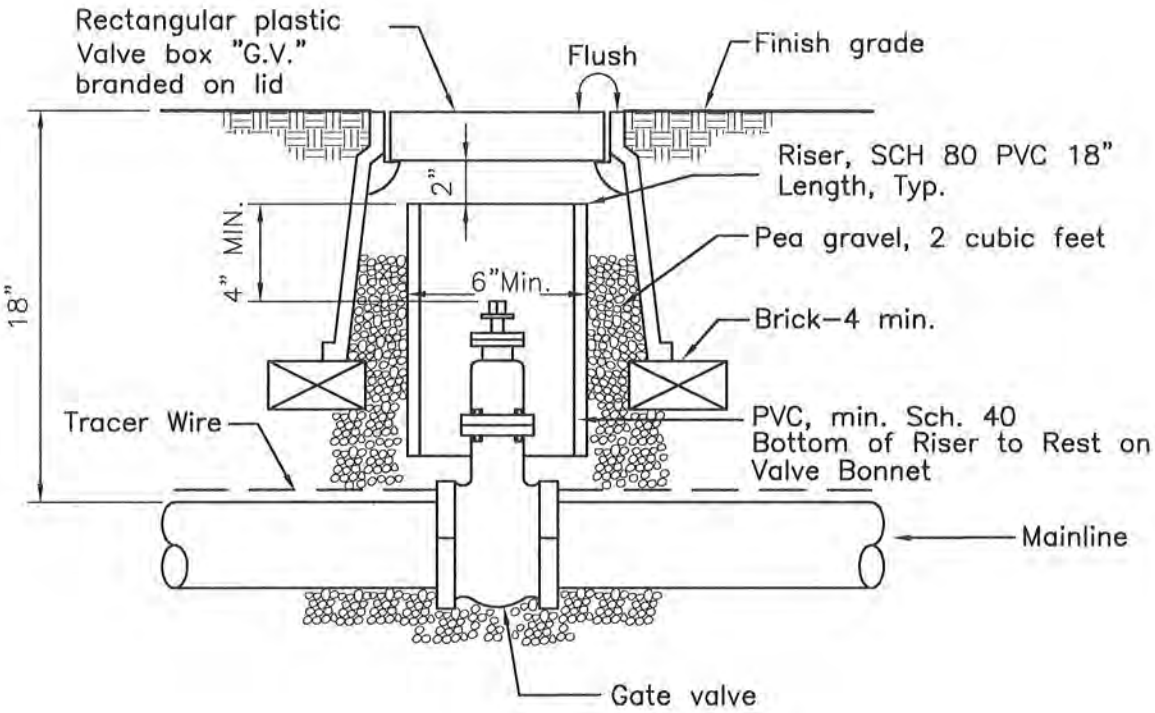

REVISION			
Deleted Alt A	CITY OF WOODLAND COMMUNITY DEVELOPMENT DEPARTMENT ENGINEERING DIVISION APPROVED BY DATE 03/23/10 BRENT MEYER, CITY ENGINEER	Water Valve Box in Landscape Areas	0727

SCALE : N.T.S.	FILE NAME	SPEC0730.DWG

TYPICAL LOCATIONS

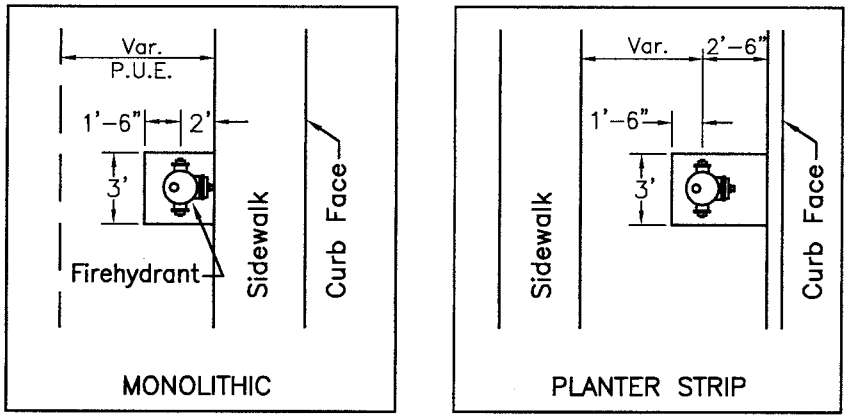

NOTE:

1. Existing street improvements that are removed for hydrant installation shall be replaced, by the Contractor, to the complete satisfaction of City Engineer.
2. Paint colors per Sect. 11.02 of Materials and Construction Methods.

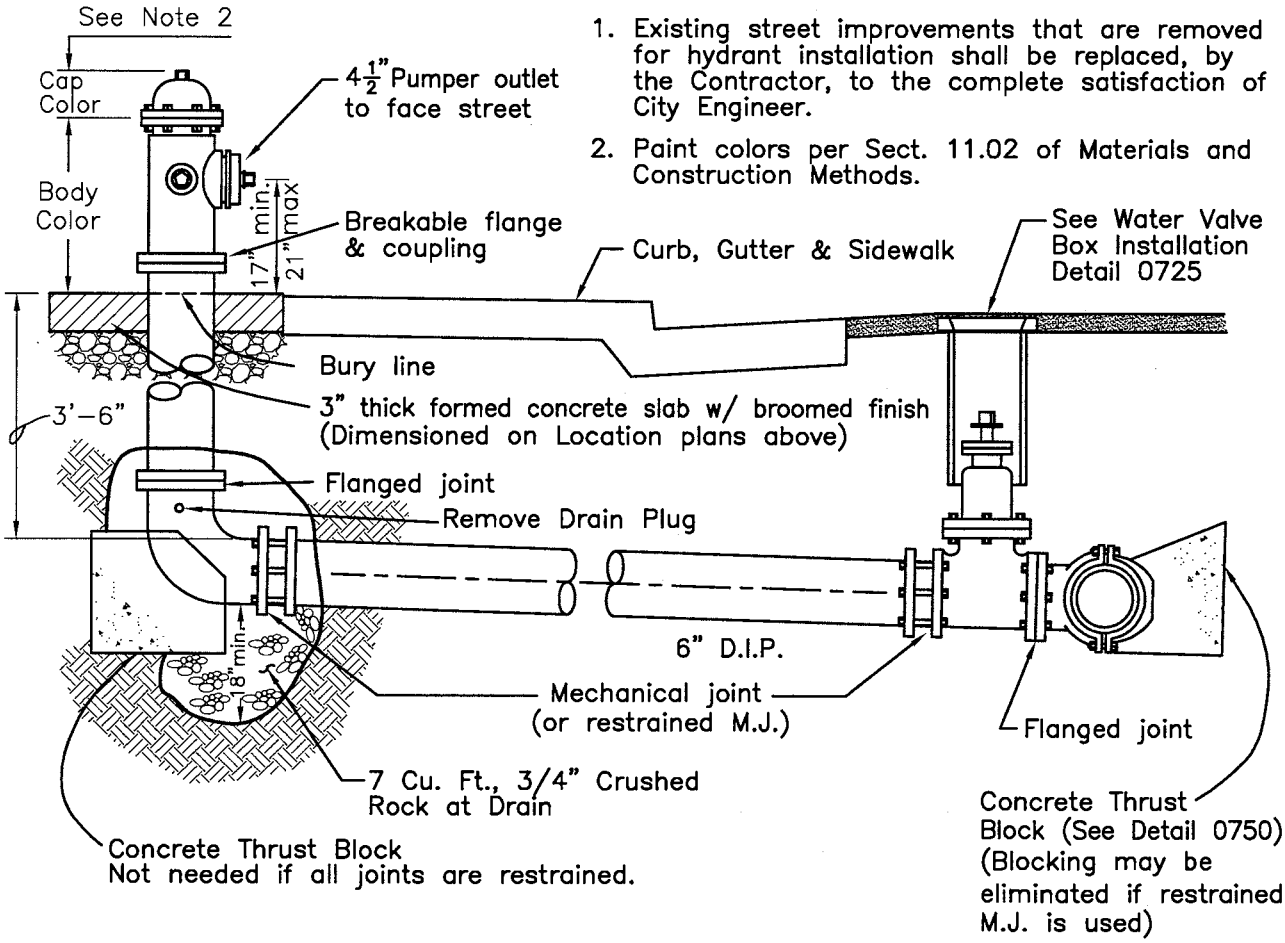

NO.	REVISION	BY

CITY OF WOODLAND
PUBLIC WORKS DEPARTMENT
ENGINEERING DIVISION

APPROVED BY
DATE 11/05/07 DICK DONNELLY, CITY ENGINEER

FIRE HYDRANT (WATER MAIN UNDER THE STREET)

0730

SCALE : N.T.S.	FILE NAME	SPEC0735.DWG

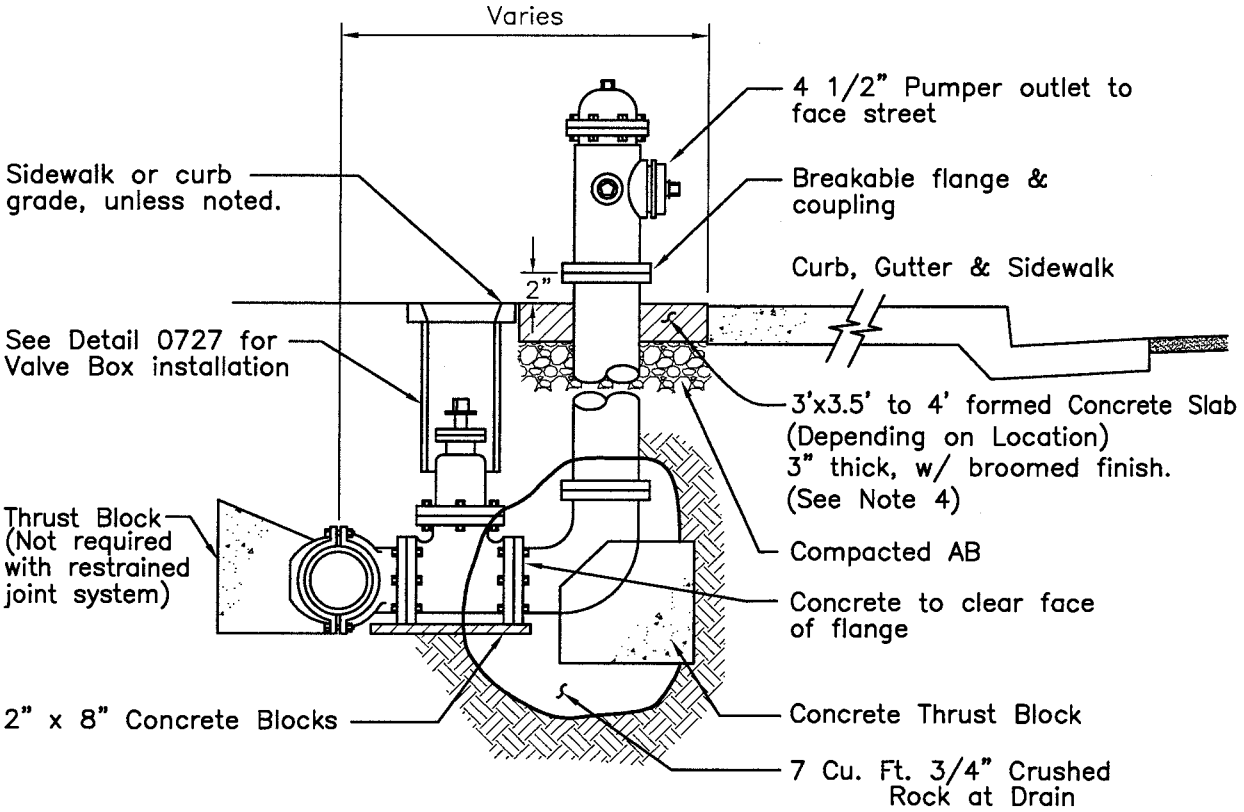

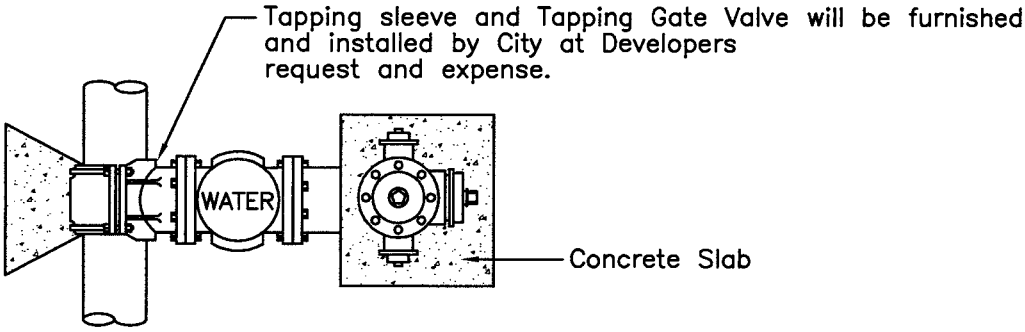

NOTE:

1. Existing street improvements that are removed for hydrant installation shall be replaced by Contractor to the complete satisfaction of City Engineer.
2. For Fire Hydrant specification, see Section 11.02, Materials and Construction Methods.
3. Fire Hydrant Drain Plug to be Removed.
4. Install at Final Grade, Drain to Street.
5. Paint colors per Section 11.02 of Materials and Construction Methods.

NO.	REVISION	BY

CITY OF WOODLAND
PUBLIC WORKS DEPARTMENT
ENGINEERING DIVISION

APPROVED BY
DATE 11/05/07 DICK DONNELLY, CITY ENGINEER

FIRE HYDRANT (EXISTING WATER MAIN BEHIND THE SIDEWALK)

0735

SCALE : N.T.S.	FILE NAME	SPEC0740.DWG

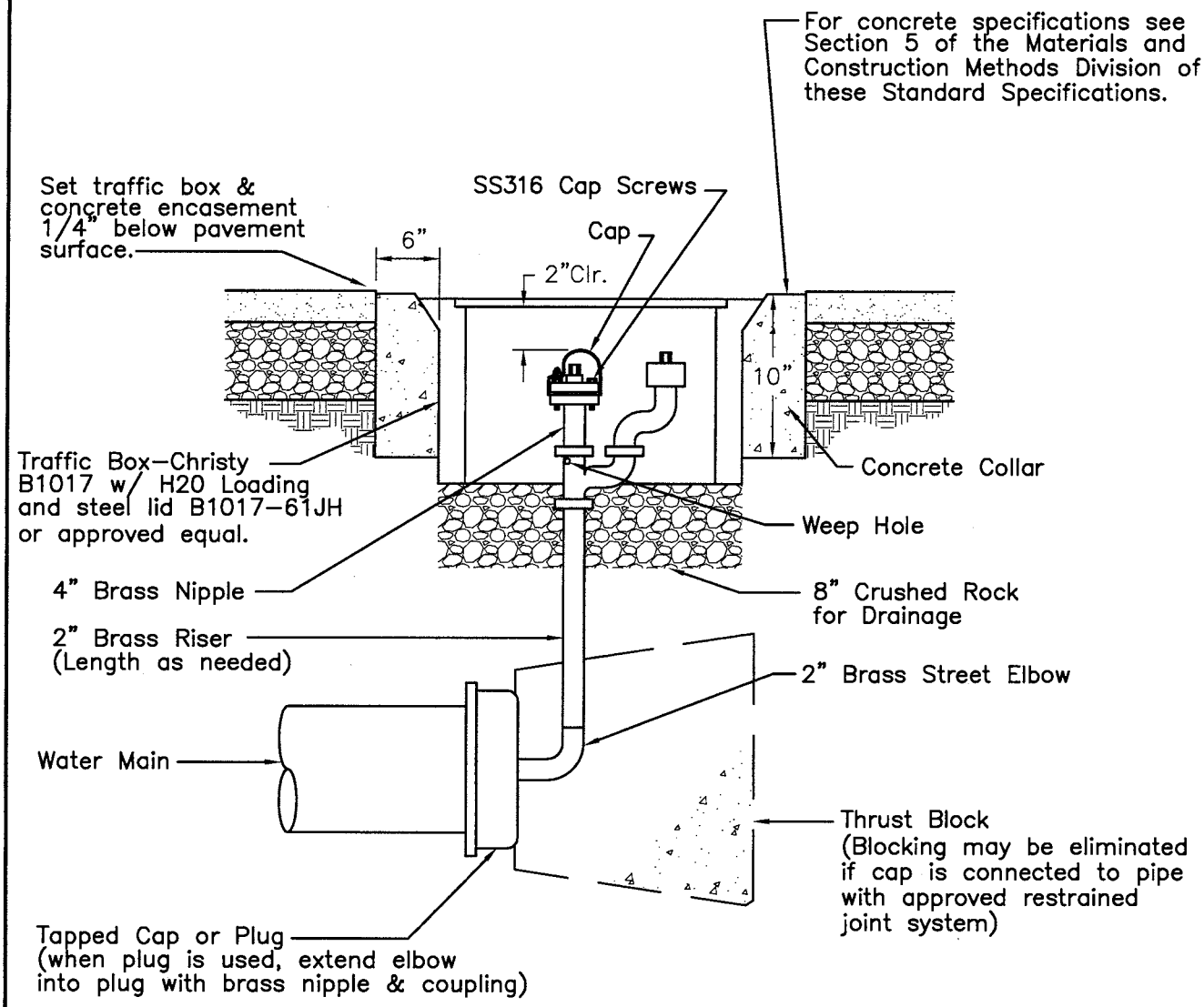

NOTE:

1. Blow–off hydrant shall be non–freezing, self–draining with 2" FIP inlet, a non–rising operating rod, and shall open to the left. All working parts shall be of bronze–to–bronze design and shall be serviceable from above grade w/ no digging. The outlet shall also be bronze and be 2–1/2" NST. Hydrant shall be lockable Eclipse 78 by Kupferle or approved equal.

NO.	REVISION	BY

CITY OF WOODLAND
PUBLIC WORKS DEPARTMENT
ENGINEERING DIVISION

APPROVED BY
DATE 11/05/07 DICK DONNELLY, CITY ENGINEER

BLOWOFF HYDRANT

0740

SCALE : N.T.S.	FILE NAME	SPEC0746.DWG

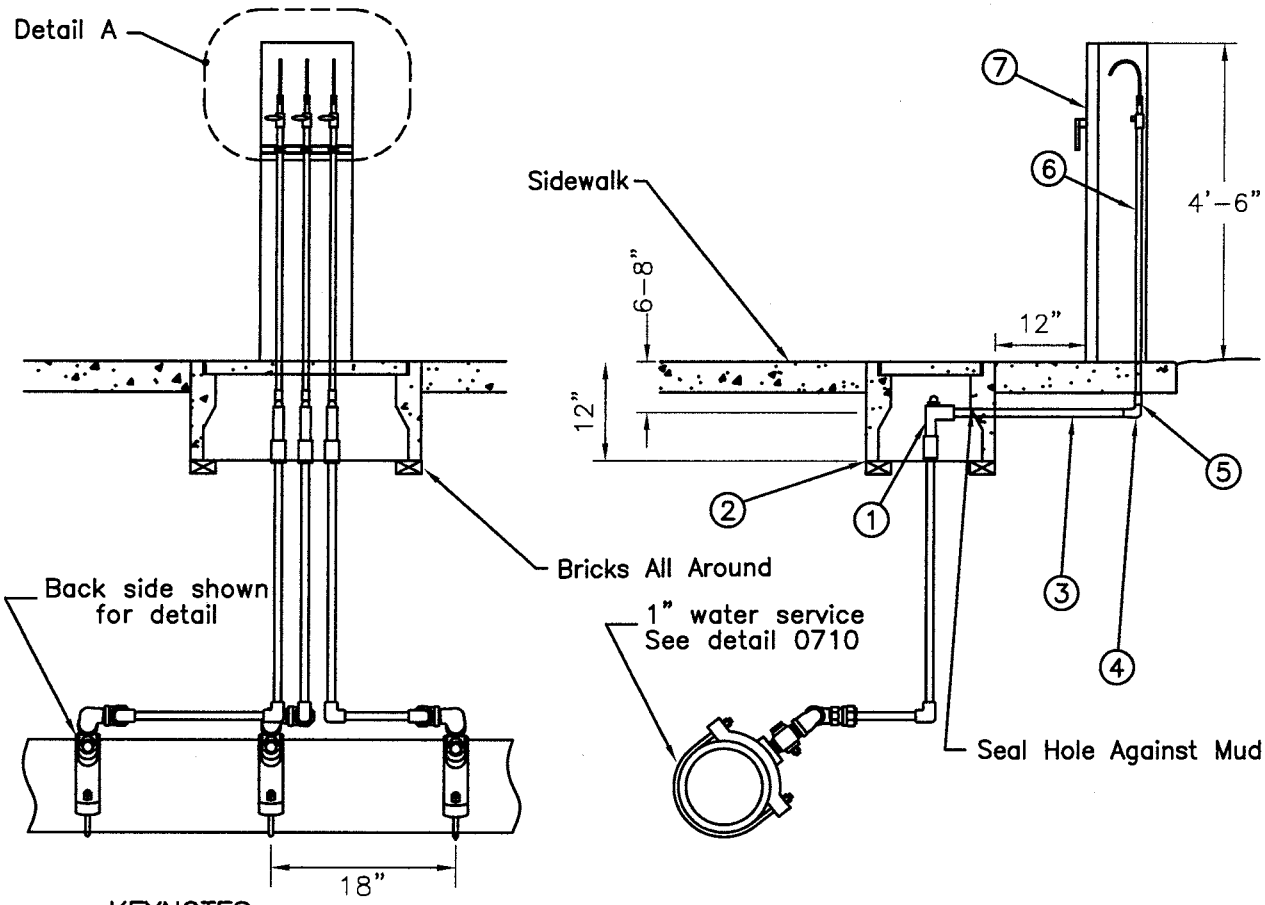

KEYNOTES:

1. 1" angle ball valve with locking ring
2. Water valve box –17" x 24" – see Detail 0725
3. Brass nipple 1"x 24"
4. 1" – 90 elbow brass
5. 3/4" x 1" brass bushing
6. 3/4" brass pipe
7. Locking steel enclosure – Approx. 4'–6" tall
8. 3/8" SS tube – shaped to allow collection of sample.
9. Nut and ferrule – brass
10. 1/2" NPT x 3/8" straight thread
11. 3/4" NPT – 1/2" NPT bushing brass
12. Stainless steel ball valve w/ SS handle
13. Insulate pipe against freezing with pre–formed insulating material and anchor to enclosure.

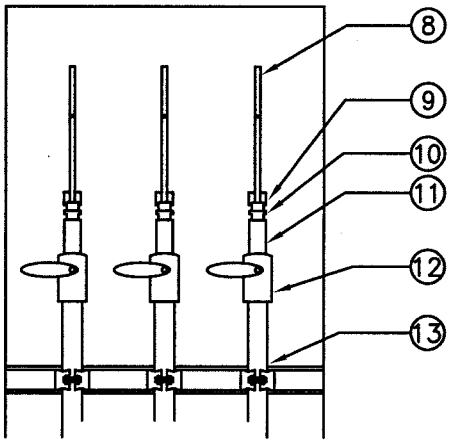

DETAIL A

NO.	REVISION	BY

CITY OF WOODLAND
PUBLIC WORKS DEPARTMENT
ENGINEERING DIVISION

APPROVED BY
DATE 11/05/07 DICK DONNELLY, CITY ENGINEER

WATER DISTRIBUTION SYSTEM SAMPLING STATION

0745

SCALE : n.t.s.	FILE NAME	spec0750.dwg

REQUIRED THRUST RESISTING FORCE (lbs.) FROM THRUST BLOCKS

FITTING TYPE		90° BEND	45° BEND	$22\frac{1}{2}$° BEND	$11\frac{1}{4}$° BEND	TEE OR DEAD END	TEE W/ PLUG	CROSS W/ PLUG
TYPICAL INSTALLATION			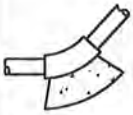	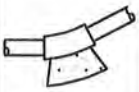		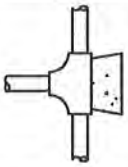	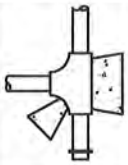	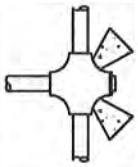
PIPE SIZE	4"	2,700	1,500	1,000	400	1,900	2,700	1,900
	6"	6,000	3,300	1,700	800	4,200	6,000	4,200
	8"	10,700	5,800	3,000	1,500	7,500	10,700	7,500
	10"	16,700	9,000	4,600	2,300	11,800	16,700	11,800
	12"	24,000	13,000	6,600	3,300	17,000	24,000	17,000
	14"	32,700	17,700	9,000	4,500	23,000	32,700	23,000

NOTES

1. For concrete specifications see Section 5 of the Materials and Construction Methods of these Standard Specifications.
2. Blocks to be poured against undisturbed soil.
3. Thrust blocks remain clear of pipe joints.
4. Engineer to determine soil type, soil bearing pressure, and required Thrust block bearing area based on required Thrust resisting forces from Table, and a safety factor of 2.0.
5. Magnitude of resultant force at a bend: $F = 2 \times P \times A \times \sin(\theta/2)$.

   P = test pressure, 150 psig
   A = cross-section area of pipe, sq. in.
   θ = bend angle
6. Thrust force at dead end: $F = P \times A$

   A = cross-section of branch, sq. in.
7. For City Parks: Mechanical joint restraints are required in place of thrust blocks.

REVISION			
Added Note 7	CITY OF WOODLAND COMMUNITY DEVELOPMENT DEPARTMENT ENGINEERING DIVISION APPROVED BY DATE 03/23/10 BRENT MEYER, CITY ENGINEER	Water Pipeline Thrust Restraint Blocks	0750

SCALE : NTS	FILE NAME	SPEC0753.DWG

REQUIRED RESTRAINED LENGTH, FEET – For Ductile Pipe Only

Fittings Type	PIPE CONFIGURATION			4"	6"	8"	10"	12"	14"
Horizontal Bend	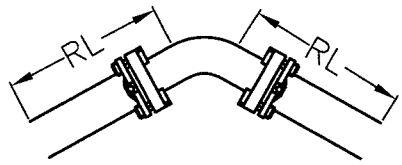 RL = RESTRAINED LENGTH		90°	16'	22'	29'	34'	40'	45'
			45°	6'	9'	12'	14'	17'	19'
			22½°	3'	4'	6'	7'	8'	9'
			11¼°	2'	2'	3'	3'	4'	4'
Tee-Branch	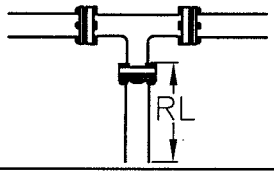	Crossing Pipe Size	4"	28'	28'	28'	28'	28'	28'
			6"	~	39'	39'	39'	39'	39'
			8"	~	~	51'	51'	51'	51'
			10"	~	~	~	61'	61'	61'
			12"	~	~	~	~	72'	72'
Dead Ends (& in-line valves)	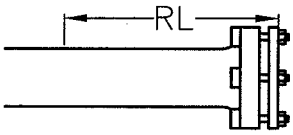			28'	39'	51'	61'	72'	83'
Reducer	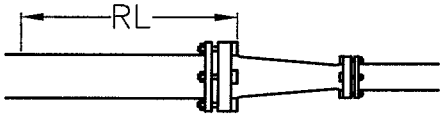	Reduced Pipe Size	4"	~	20'	37'	50'	63'	74'
			6"	~	~	21'	38'	53'	66'
			8"	~	~	~	21'	38'	54'
			10"	~	~	~	~	36'	51'
			12"	~	~	~	~	~	21'
Vertical Offset	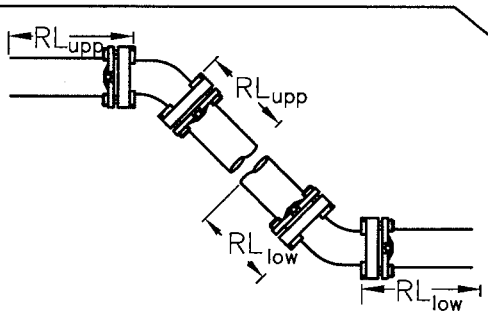	45° bend	upper	11'	16'	21'	25'	30'	34'
			lower	4'	5'	7'	9'	9'	12'
		22½° bend	upper	5'	8'	10'	12'	14'	16'
			lower	2'	3'	3'	5'	4'	6'
		11¼° bend	upper	3'	4'	5'	6'	7'	8'
			lower	1'	1'	2'	2'	2'	3'

NOTES:

Restrained lengths calculated for pipe placement conditions as follows:

1. Soil type is poorly graded sands, and gravely sands,
2. Type 3 trench,
3. 150 psig line test pressure,
4. Factor of safety of 2:1,
5. Minimum pipe bury depth is 3½ feet,
6. Pipe is ductile iron, without poly-warp (Poly-wrap encased sections will require additional joint restraint since the friction between the pipe and the soil is reduced with the use of polythylene encasement),
7. Vertical offset lower bend assumed depth of bury of 6 feet minimum – if less than 6 feet, use restraint length for upper bend. 90° bends should not be used in vertical offsets. Due to the possibility of severe stresses imposed on the fittings bend angles should be limited to 45°,
8. EBAA iron computer program was used to calculate thrust restraint lengths.

NO.	REVISION	BY

CITY OF WOODLAND
PUBLIC WORKS DEPARTMENT
ENGINEERING DIVISION

APPROVED BY
DATE 11/05/07 DICK DONNELLY, CITY ENGINEER

PIPE RESTRAINED LENGTH FOR DIP

0753

SCALE : NTS	FILE NAME	SPEC0753.DWG

REQUIRED RESTRAINED LENGTH, FEET – For PVC Pipe Only

Fittings Type	PIPE CONFIGURATION			4"	6"	8"	10"	12"	14"
Horizontal Bend	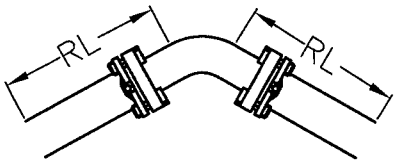 RL = RESTRAINED LENGTH		90°	18'	25'	32'	38'	45'	51'
			45°	8'	10'	14'	16'	19'	21'
			22½°	4'	5'	7'	8'	9'	11'
			11¼°	2'	3'	4'	4'	5'	5'
Tee-Branch	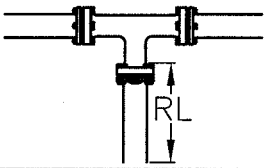	Crossing Pipe Size	4"	37'	36'	34'	33'	31'	29'
			6"	~	52'	51'	49'	47'	45'
			8"	~	~	69'	67'	65'	62'
			10"	~	~	~	83'	80'	78'
			12"	~	~	~	~	97'	95'
Dead Ends (& in-line valves)	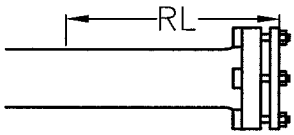			38'	54'	71'	85'	101	115
		Reduced Pipe Size	4"	~	28'	51'	69'	87'	104'
			6"	~	~	30'	52'	73'	92'
			8"	~	~	~	29'	54'	75'
			10"	~	~	~	~	30'	55'
			12"	~	~	~	~	~	30'
Reducer	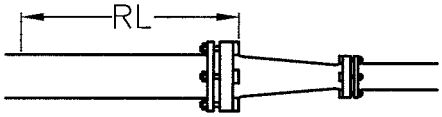								
Vertical Offset	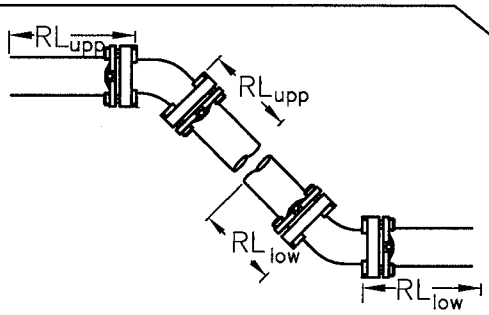	45° bend	upper	16'	23'	30'	36'	42'	48'
			lower	5'	7'	9'	11'	13'	15'
		22½° bend	upper	8'	11'	14'	17'	20'	23'
			lower	3'	4'	5'	6'	7'	7'
		11¼° bend	upper	4'	6'	7'	9'	10'	12'
			lower	2'	2'	3'	3'	4'	4'

NOTES:

Restrained lengths calculated for pipe placement conditions as follows:

1. Soil type is poorly graded sands, and gravely sands,
2. Type 3 trench,
3. 150 psig line test pressure,
4. Factor of safety of 2:1,
5. Minimum pipe bury depth is 3½ feet,
6. Vertical offset lower bend assumed depth of bury of 6 feet minimum – if less than 6 feet, use restraint length for upper bend. 90° bends should not be used in vertical offsets. Due to the possibility of severe stresses imposed on the fittings bend angles should be limited to 45°,
7. EBAA iron computer program was used to calculate thrust restraint lengths.

NO.	REVISION	BY

CITY OF WOODLAND
PUBLIC WORKS DEPARTMENT
ENGINEERING DIVISION

APPROVED BY
DATE 11/05/07 DICK DONNELLY, CITY ENGINEER

PIPE RESTRAINED LENGTH FOR PVC

0754

SCALE : N.T.S.	FILE NAME	SPEC0755.DWG

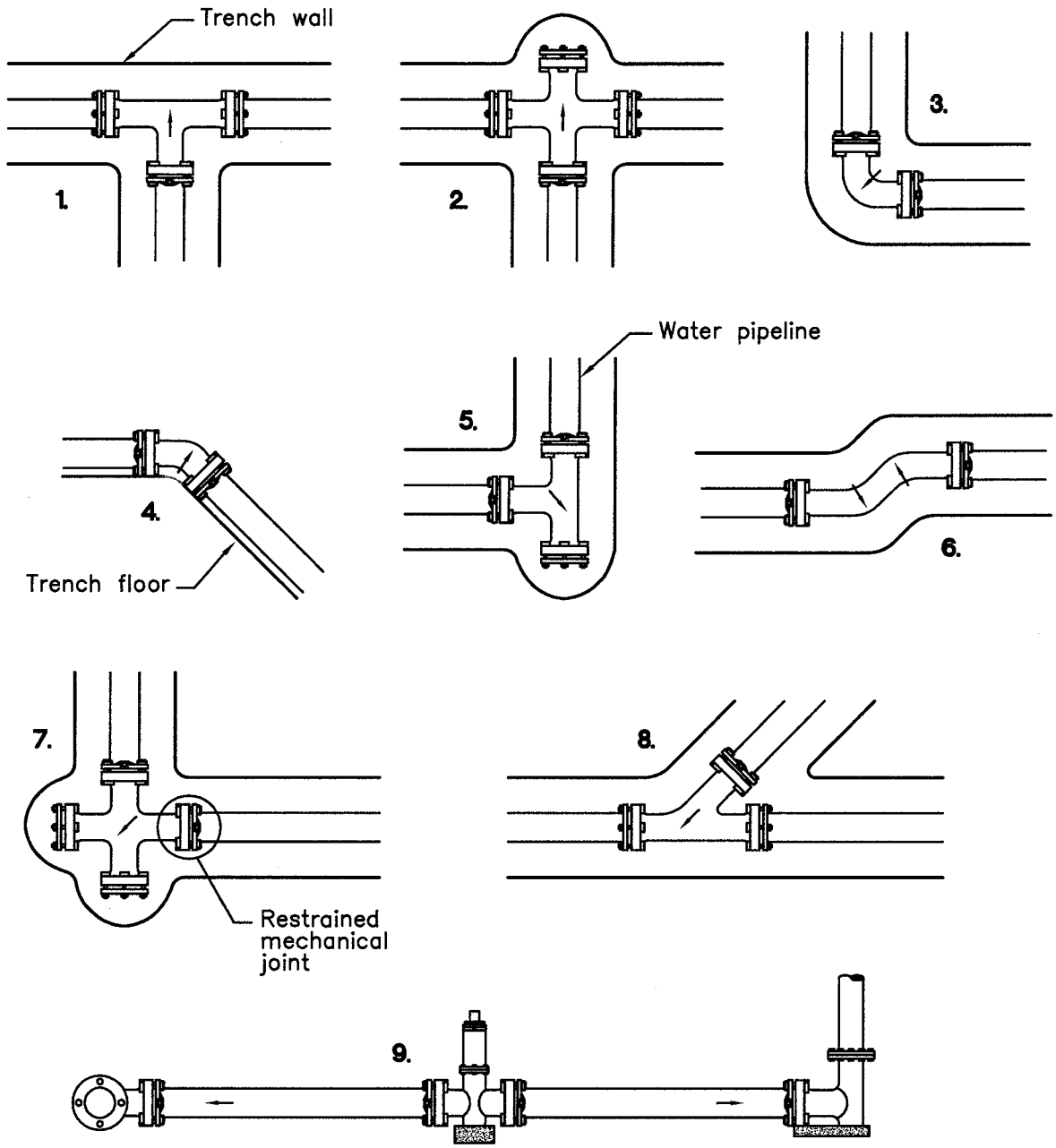

1. Thru line connection, tee
2. Thru line connection, cross used as tee
3. Direction change, elbow
4. Direction change vertical, bend
5. Direction change, tee used as elbow
6. Direction change
7. Direction change, cross used as elbow
8. Thru line connection, wye
9. Hydrant runout

NO.	REVISION	BY

CITY OF WOODLAND
PUBLIC WORKS DEPARTMENT
ENGINEERING DIVISION

APPROVED BY
DATE 11/05/07 DICK DONNELLY, CITY ENGINEER

TYPES OF RESTRAINED MECHANICAL JOINTS

0755

SCALE : n.t.s.	FILE NAME	spec0760.dwg

NOTES:

1. Install Backflow Prevention Assembly above finished grade. Provide 2' of horizontal clearance for testing access and maintenance.
2. Certification Test required prior to final approval. Contact City Municipal Service Center, (530) 661-5962 for testing information, forms and current list of certified testers.
3. Locate within the P.U.E. adjacent to the public right of way.
4. Use insulating flange kit in bolted flanges between assembly and meter box for 2" and larger devices. See Detail 0712.
5. See State Department of Health's current approved list of assemblies for acceptable models. List is available at Public Works offices, Municipal Service Center.
6. Provide enclosure or other method of screening with landscaping or architectural features. Enclosure to be green or similar to blend in with other features.
7. On City maintained irrigation connections, provide master valve and flow sensor.

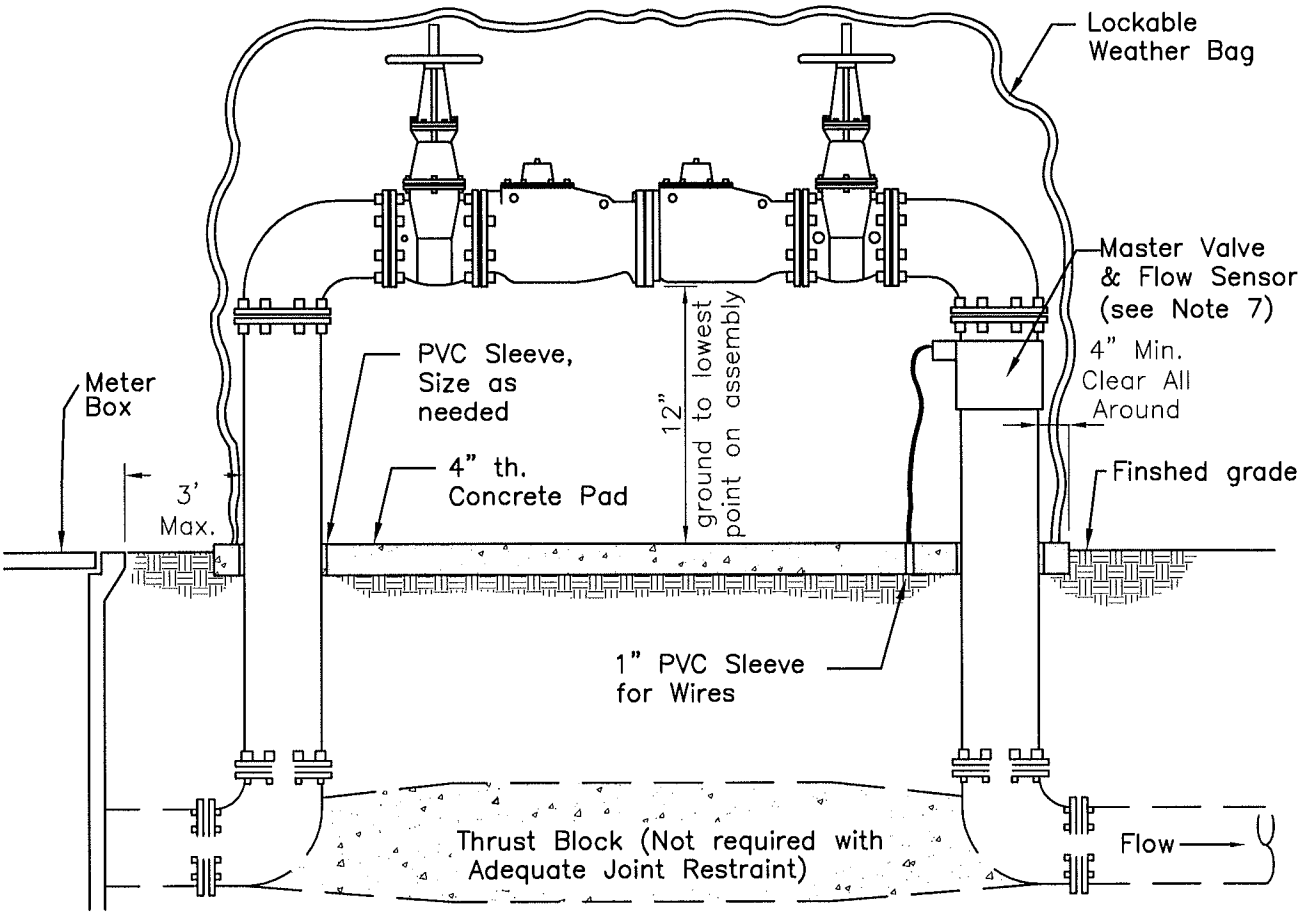

TYPICAL SIDE VIEW

REVISION	CITY OF WOODLAND COMMUNITY DEVELOPMENT DEPARTMENT ENGINEERING DIVISION	Backflow Prevention Assembly: 4" Dia. and Larger	0760
Clarify Notes and Annotations	APPROVED BY DATE 11/22/10 BRENT MEYER, CITY ENGINEER		

SCALE : n.t.s.	FILE NAME	spec0761.dwg

NOTES:

1. Install Backflow Prevention Assembly above finished grade. Provide 2' of horizontal clearance for testing access and maintenance.
2. Certification Test required prior to final approval. Contact City Municipal Service Center, (530) 661-5962 for testing information, forms and current list of certified testers.
3. Locate within the P.U.E. adjacent to the public right of way.
4. Use insulating flange kit in bolted flanges between assembly and meter box for 2" and larger devices. See Detail 0712.
5. See State Department of Health's current approved list of assemblies for acceptable models. List is available at Public Works offices, Municipal Service Center.
6. Provide rigid enclosure to prevent tampering. Green color or similar to blend in with adjacent features, epoxy fusion coating or equivalent method.
7. On City maintained irrigation connections, provide master valve and flow sensor.

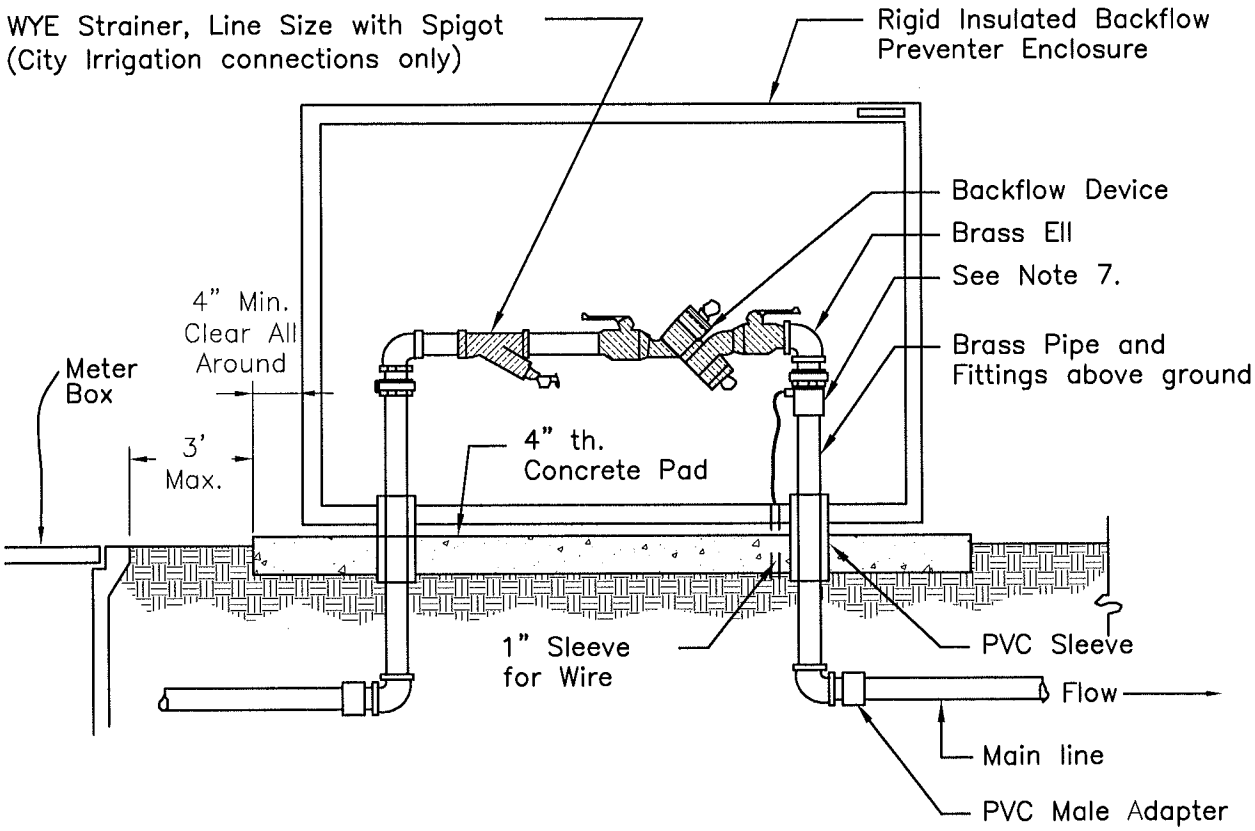

TYPICAL SIDE VIEW

REVISION	CITY OF WOODLAND COMMUNITY DEVELOPMENT DEPARTMENT ENGINEERING DIVISION	Backflow Prevention Assembly: Less than 4" Dia.	0761
Clarify Notes and annotations	APPROVED BY DATE 11-22-10 BRENT MEYER, CITY ENGINEER		

SCALE : n.t.s.	FILE NAME	spec0762.dwg

NOTES:

1. Install Backflow Prevention Assembly above finished grade. Provide 2' of horizontal clearance for testing access and maintenance.
2. Test required prior to final approval; contact City Municipal Service Center, (530) 661-5962 for testing information and forms.
3. Locate within the P.U.E. adjacent to the public right of way.
4. Use insulating flange kit in bolted flanges between assembly and meter box for 2" and larger devices. See Detail 0712.
5. Provide a Double Check Detector Assembly from the State Department of Health's current approved list. List is available at Public Works offices.
6. Provide enclosure or other method of screening with landscaping or architectural features. Enclosure to be green or similar to blend in with other features.
7. Orientation of the FDC shall be such that the hose lines may be readily and conveniently attached to the inlets without interference.
8. Provide additional 2½" FDC as required by Fire Marshall for specific Use.

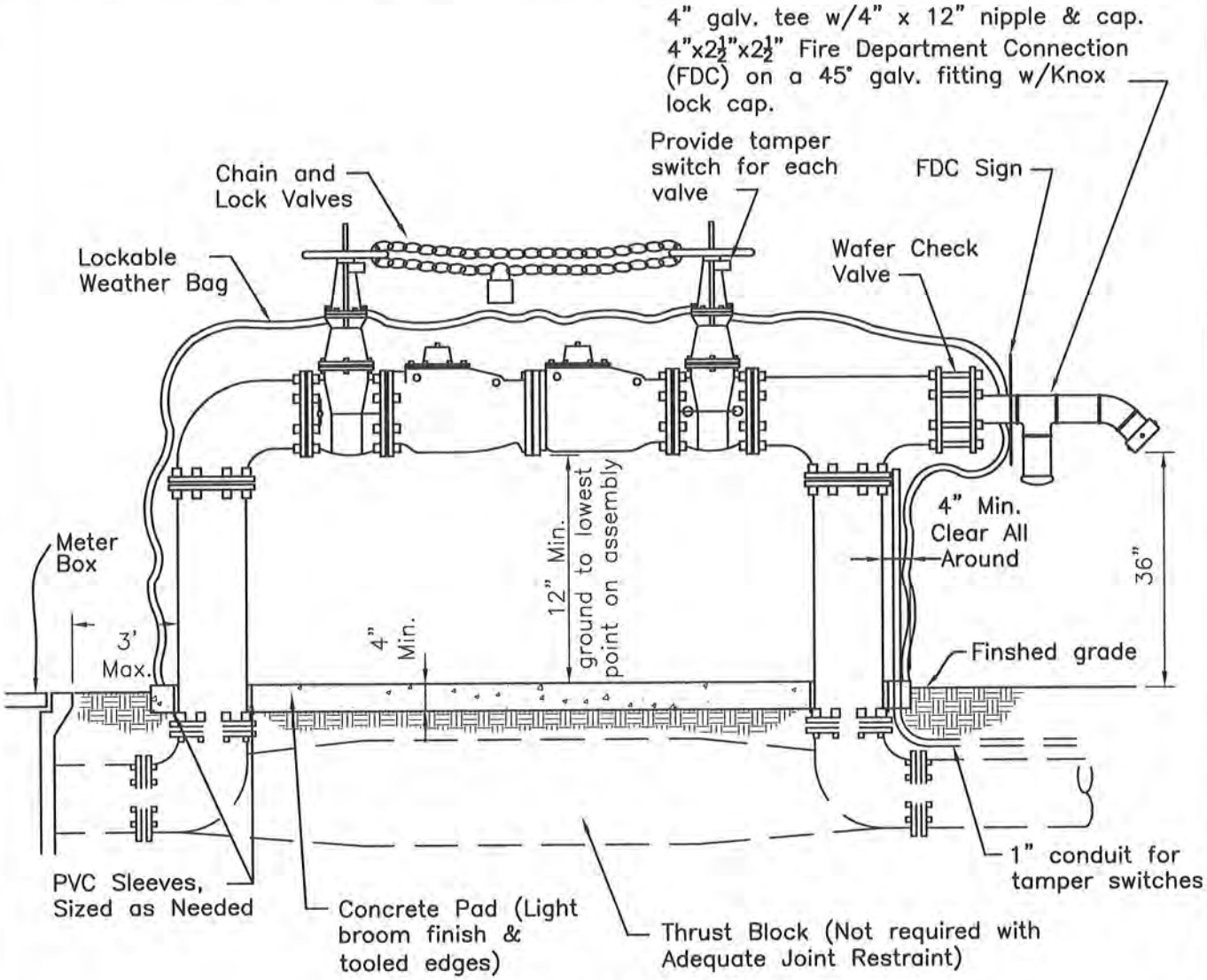

TYPICAL SIDE VIEW

REVISION	CITY OF WOODLAND COMMUNITY DEVELOPMENT DEPARTMENT ENGINEERING DIVISION	Fire Department Connection	0762
Rev FDC Size to 4"x...	APPROVED BY DATE 05/13/11 BRENT MEYER, CITY ENGINEER		

STREET LIGHT TYPE	HEIGHT	MAST ARM	POLE TYPE	POLE MFG	BOLT CIRCLE	LAMP SIZE – TYPE
A	25'	6	Prestressed Concrete	Centricon MBR–7 Ameron 1C2–25	12 1/2"	34W – LED
B	28'	6 or 8	Prestressed Concrete	Centricon MBR–8 Ameron 1C3–28	15 1/4"	55W – LED
C	30'	6 or 8	Prestressed Concrete	Centricon MBR–9–p Ameron 1C3–30	15 1/4"	95W – LED
D	30'	6	Steel	Ameron A–306 Pacific Union FB1130B1–8G	11 1/2"	34W – LED
Downtown Light	14'	n/a	Aluminum	See Detail 0902	11 1/2"	150W – HPS
Springlake Lights	10'–25'	n/a	Aluminum	See Details 0916, 0917, 0918	Var.	70–200W – HPS

NOTES:

1. Concrete poles shall be grey terrazzo, sand blasted with an acrylic coating.
2. Steel poles whall be hot–dip galvanized 10–gauge steel (minimum).
3. HPS luminaires shall be Type II distribution, 2 way, 120 volt, with twist lock receptacles (as needed) and regulator type ballast manufactured by GE, ITT or approved equivalent. Refractors shall be polycarbonate resin for 70 and 100 watt lamps and glass for 200 watt lamps.
4. LED Luminaires shall comply with Construction Standards Section 24, LED Street Lights.
5. For Type "B" and "C" street lights, use a 6' mast arm when pole is within 6'–6" of face of curb. Use an 8' mast arm when pole is more than 6'–6" from face of curb.
6. Provide in–line fuse protection in the pole handhole with 5–amp fuses in 30–amp fuse holder.
7. Provide poles by the listed manufacturers or approved equivalent.

REVISION
Add LED for Mast Arm Lights

CITY OF WOODLAND
COMMUNITY DEVELOPMENT DEPARTMENT
ENGINEERING DIVISION

APPROVED BY
DATE 05/13/11 BRENT MEYER, CITY ENGINEER

Street Lights

0900

SCALE :

FILE NAME

spec0900.dwg

SCALE : n.t.s.	FILE NAME	spec0902.dwg

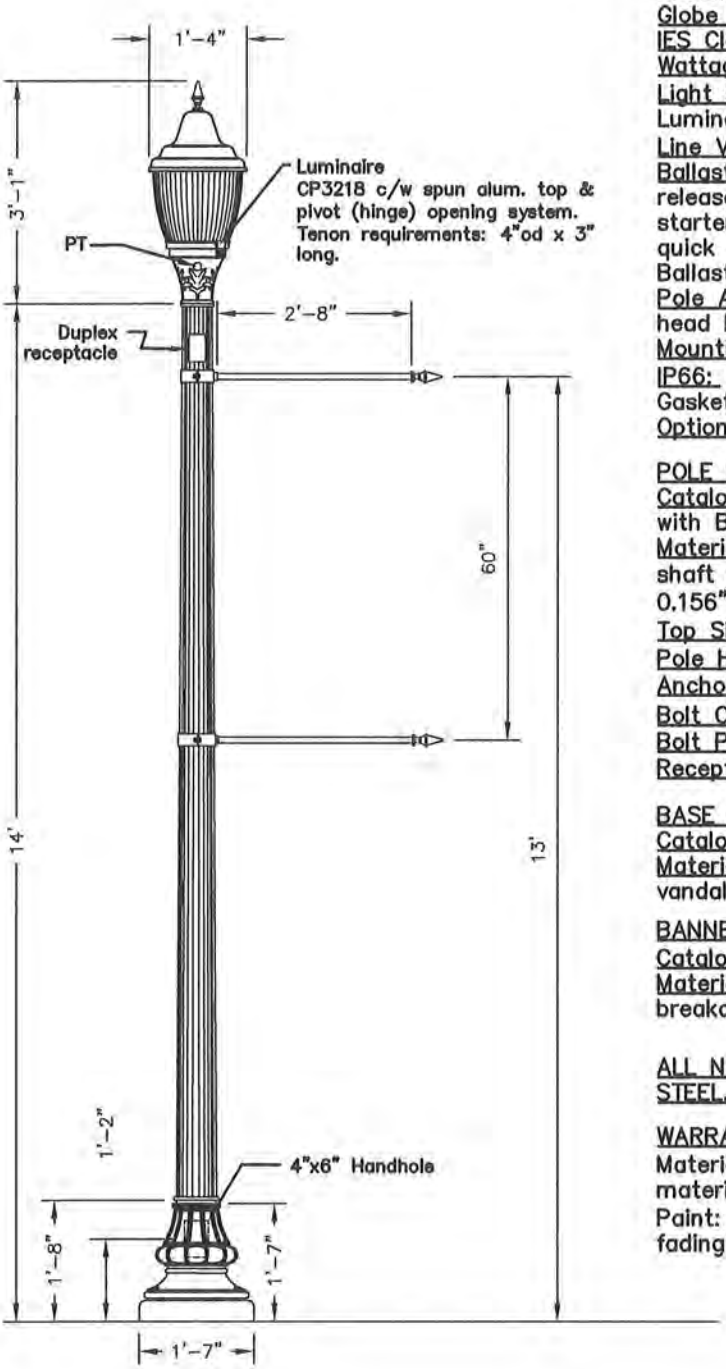

LUMINAIRE SPECIFICATIONS:
Catalogue No.:
CP3218-F1AP-RS3-VS3AR-150HPS-120-S1-RAL9005TX
Globe Material: High-Impact Acrylic with internal ribs
IES Classification: Type III Cut-Off
Wattage: 150
Light Source: High Pressure Sodium (HPS)
Luminaire shall have a pre-installed lamp
Line Voltage: 120/MT
Ballast: Shall be mounted on a stainless steel quick release tray, with a medium base socket, ballast, starter & capacitor. All components shall have Molex quick connectors. No tools required for maintenance. Ballast, lamp and photocell shall be tested at factory.
Pole Adaptor: Shall be Oak Leaf fitter with square head bolts.
Mounting Hardware: Shall be Square head bolts.
IP66: Weatherproof Luminaire with "V" Groove Silicone Gasket.
Option: Twist lock photocell pre-installed in fitter.

POLE SPECIFICATIONS:
Catalogue No.: PAC10-14-SA-RAL9005TX-GFI with Breakaway Banner
Material: Round, tapered, 16 fluted formed aluminum shaft with textured powder coat. 0.14 inch/ft taper, 0.156" thickness.
Top Size: 4.93" Dia.
Pole Height: 14'-0"
Anchor Bolts: See Detail 0910
Bolt Circle: 11-½" diameter
Bolt Projection: 3" high
Receptacle: 120 V Duplex with GFCI

BASE COVER SPECIFICATIONS:
Catalogue No.: BD70-RAL9005TX
Material: Two-piece Cast aluminum, with vandal proof screws on base cover

BANNER ARM:
Catalogue No.: BHB1532AP/S2-RAL9005TX
Material: Steel Tubing with decorative finial, breakaway type, bolted on strap.

ALL NON-ELECTRICAL HARDWARE SHALL BE STAINLESS STEEL.

WARRANTY
Material and Workmanship: Two (2) year warranty on material and workmanship from the date of shipment.
Paint: Five (5) years against corrosion, peeling and fading of more than 20% of the original gloss.

Anchor Plate

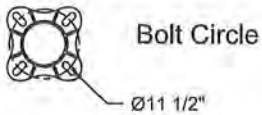

NOTES:

1. Pole and Luminaire as manufactured by Cyclone or approved equal.
2. See Detail 0910 for street light pole foundation requirements.

REVISION	CITY OF WOODLAND COMMUNITY DEVELOPMENT DEPARTMENT ENGINEERING DIVISION	Downtown Street Light (14')	0902
Rev banner attachment	APPROVED BY DATE 12/12/11 BRENT MEYER, CITY ENGINEER		

SCALE : n.t.s.	FILE NAME	spec0905.dwg

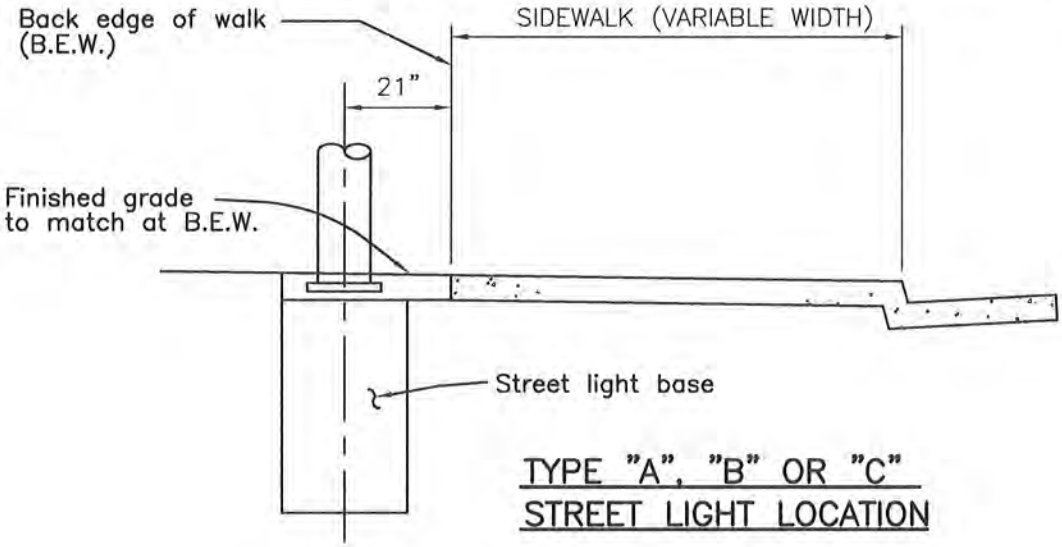

TYPE "A", "B" OR "C"
STREET LIGHT LOCATION

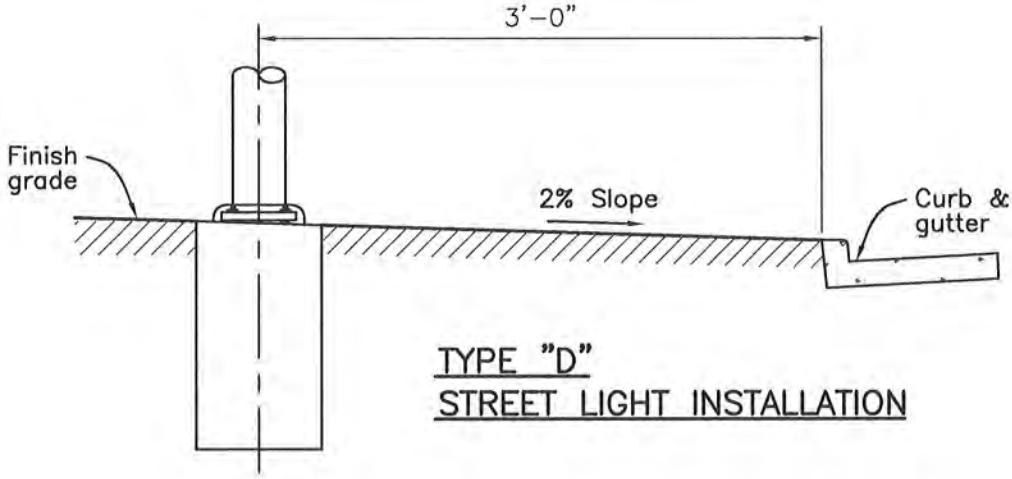

TYPE "D"
STREET LIGHT INSTALLATION

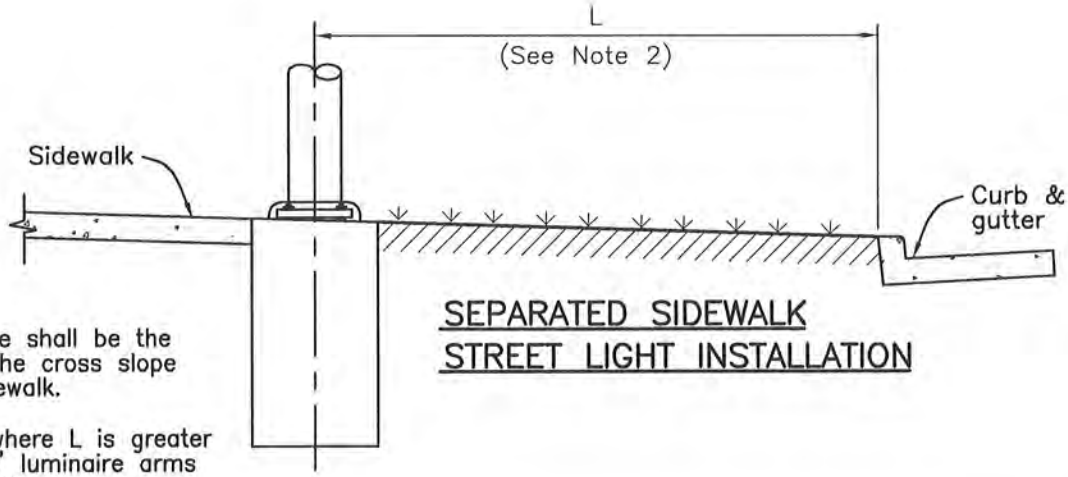

SEPARATED SIDEWALK
STREET LIGHT INSTALLATION

NOTES:

1. Finish slope shall be the same as the cross slope to the sidewalk.
2. In cases where L is greater than 6', 8' luminaire arms are required.

REVISION			
Correct Note 2	CITY OF WOODLAND COMMUNITY DEVELOPMENT DEPARTMENT ENGINEERING DIVISION APPROVED BY DATE 03/23/10 BRENT MEYER, CITY ENGINEER	Street Light Locations	0905

SCALE :	FILE NAME	spec0910.dwg

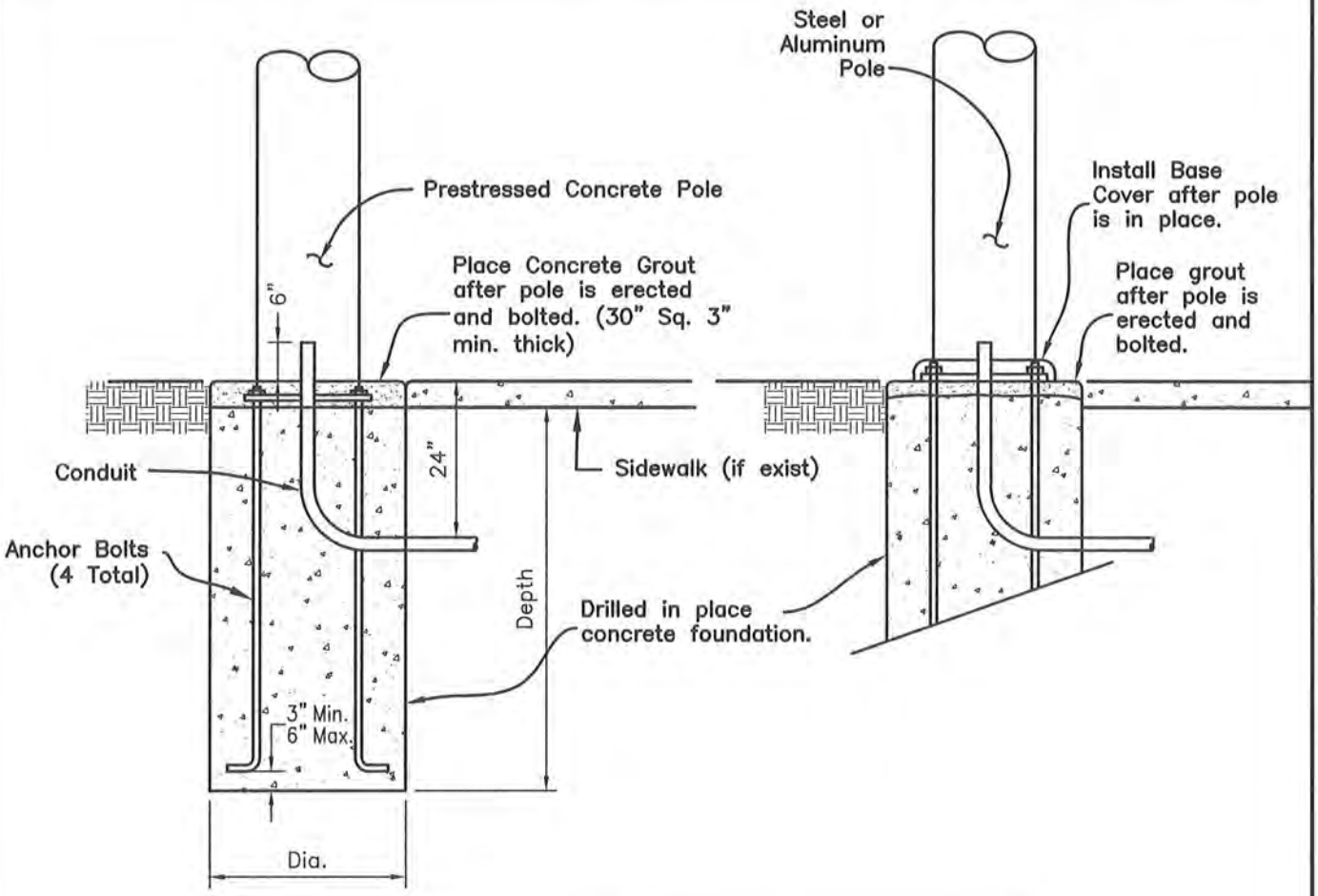

Foundation Dimensions					
Type	Pole Ht.	Ref. Detail	Anchor Bolt	Dia.	Depth
A	25'	0900	1"	2'–6"	4'–0"
B	28'	0900	1"	2'–6"	4'–0"
C	31'	0900	1"	2'–6"	5'–0"
D	30'	0900	1'	2'–6"	5'–0"
Downtown	14'	0902	¾"	2'–0"	3'–0"
Springlake	10'–15'	0916 0917	¾"	2'–0"	3'–0"
Springlake	18'–25'	0917 0918	1"	2'–6"	4'–0"

REVISION	CITY OF WOODLAND COMMUNITY DEVELOPMENT DEPARTMENT ENGINEERING DIVISION	Street Light Foundations	0910
Clarify grouting	APPROVED BY DATE 12/12/11 BRENT MEYER, CITY ENGINEER		

SCALE : N.T.S.	FILE NAME	SPEC0915.DWG

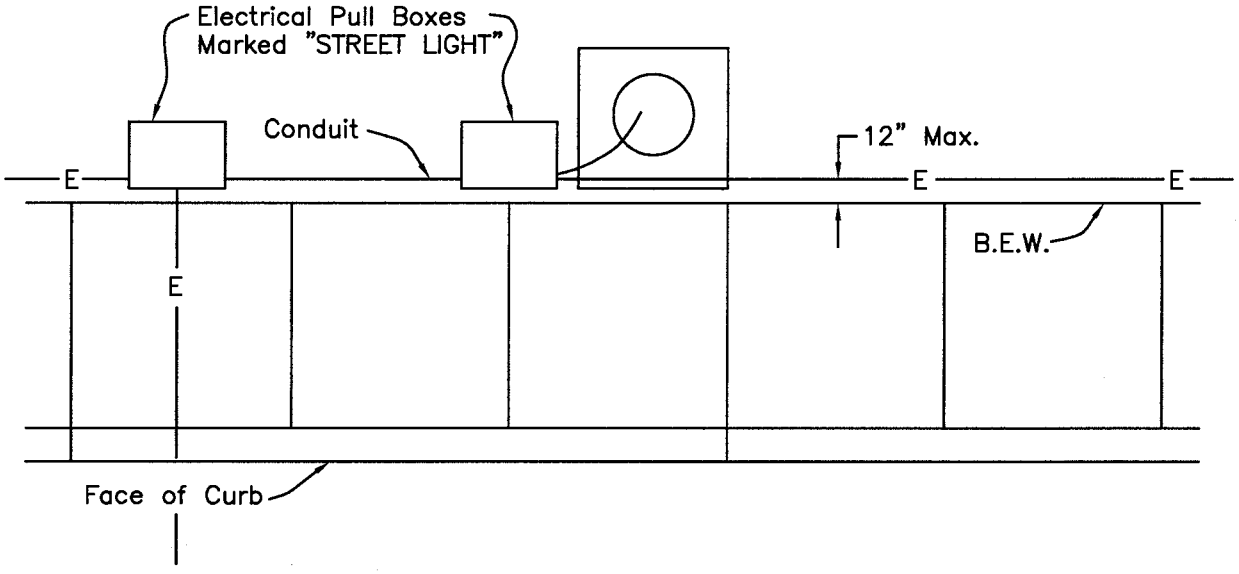

Electrical Box to be set at Back Edge of Walk/Top of Curb Grade

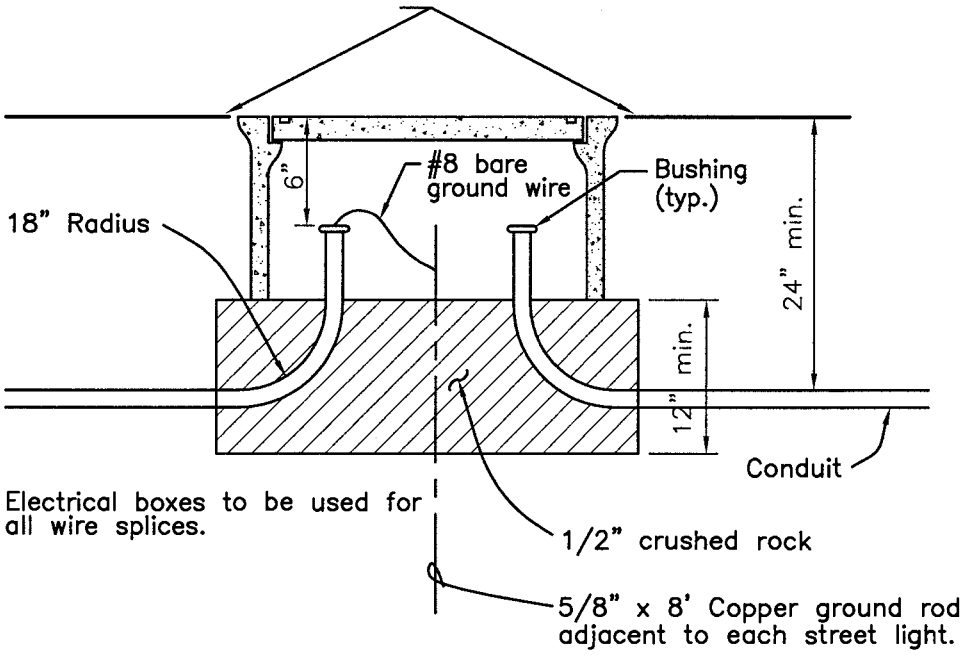

NOTE:

1. Pull boxes shall be installed at locations specified under Section 13.07 of the "Materials and Construction Methods" section of the Standard Specifications and Details.

NO.	REVISION	BY

CITY OF WOODLAND
PUBLIC WORKS DEPARTMENT
ENGINEERING DIVISION

APPROVED BY
DATE 11/05/07 DICK DONNELLY, CITY ENGINEER

ELECTRICAL STREET LIGHT BOX

0915

SCALE : n.t.s.	FILE NAME	spec0916–0919

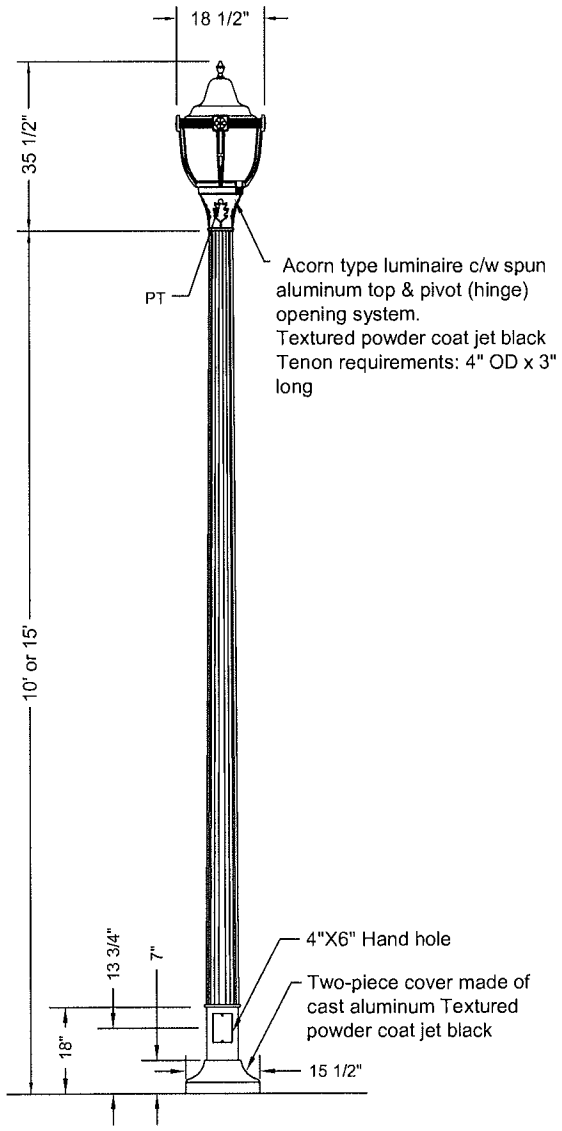

LUMINAIRE SPECIFICATIONS:

Catalogue No.:
CP3164-F6AP-RS3-VS3AR-WATT-QT/VOLT-S1-RAL9005TX-PT
Globe Material: Shall be high impact Acrylic with internal ribs.
IES Classification: Type III Cut-Off.
Wattage: 70,100 or 200
Light Source: High Pressure Sodium (HPS) Luminaire shall have a pre-installed lamp.
Line Voltage: To be determined.
Ballast: Shall be mounted on a stainless steel quick release tray, with medium base socket ballast, starter & capacitor. All components shall have Molex quick connectors. Ballast, lamp and photocell shall be factory tested.
Pole Adapter: Shall be Oak Leaf fitter with square head bolts.
Mounting Hardware: Shall be Square head bolts
IP66: Weatherproof luminaire with "V" grove silicone gasket.
Option: Twist lock photocell shall be pre-installed in fitter.

POLE SPECIFICATIONS:

Catalogue No.: PAC10-[10 or 15]-SA-RAL9005TX-TP
Material: 16 fluted formed aluminum shaft with jet black textured powder coat.
Taper: 0.14 inch/ft
Thickness: 0.156"
Top Size: 4.93" dia.
Pole Height: 10'-0" or 15'-0"
Anchor Bolts: See Detail 0910
Bolt Circle: 11.5"
Bolt Projection: 3" high
Vandal proof screws on hand hole.

BASE COVER SPECIFICATIONS:

Catalogue No.: CP2213-RAL9005TX
Material: Two-piece cast aluminum cover with vandal proof screws on base cover.

ALL NON-ELECTRICAL HARDWARE SHALL BE STAINLESS STEEL.

WARRANTY

Material and Workmanship: Two (2) year warranty on material and workmanship from the date of shipment.
Paint: Five (5) years against corrosion, peeling and fading of more than 20% of the original gloss.

Anchor Plate

NOTES:

1. Pole and Luminaire as manufactured by Cyclone or approved equal.
2. See Detail 0910 for street light pole foundation requirements.

REVISION	CITY OF WOODLAND COMMUNITY DEVELOPMENT DEPARTMENT ENGINEERING DIVISION	Springlake Streetlight 10' or 15' Pole	0916
Rev foundation reference	APPROVED BY DATE 11/22/10 BRENT MEYER, CITY ENGINEER		

SCALE : n.t.s.	FILE NAME	spec0916–0919

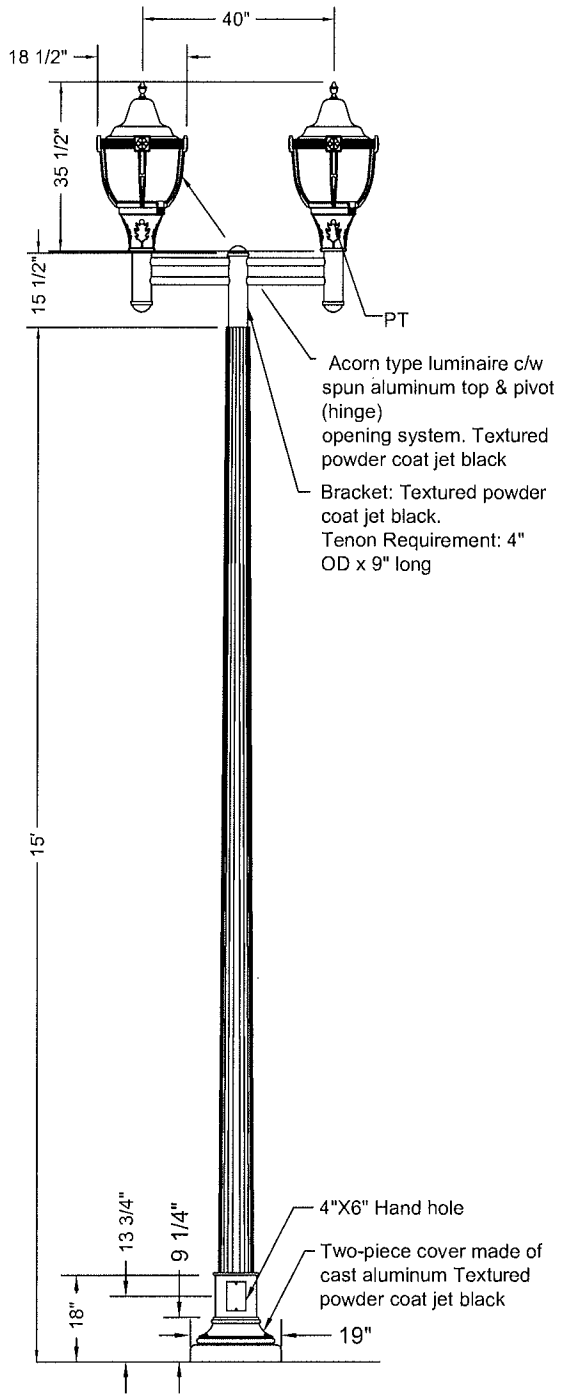

LUMINAIRE SPECIFICATIONS:

Catalogue No.:
CP3164-F6AP-RS3-VS3AR-WATT-QT/VOLT-S1-RAL9005TX-PT
Globe Material: Shall be high impact Acrylic with internal ribs.
IES Classification: Type III Cut-Off.
Wattage: 70,100 or 200
Light Source: High Pressure Sodium (HPS) Luminaire shall have a pre-installed lamp.
Line Voltage: To be determined.
Ballast: Shall be mounted on a stainless steel quick release tray, with medium base socket ballast, starter & capacitor. All components shall have Molex quick connectors. Ballast, lamp and photocell shall be factory tested.
Pole Adapter: Shall be Oak Leaf fitter with square head bolts.
Mounting Hardware: Shall be Square head bolts
IP66: Weatherproof luminaire with "V" grove silicone gasket.
Option: Twist lock photocell shall be pre-installed in fitter.

BRACKET SPECIFICATIONS:

Catalogue No.: CP2479-C2-T40-RAL9005TX
Mounting Hardware: Shall be Square head bolts
Material: Aluminum

POLE SPECIFICATIONS:

Catalogue No.: PAC10-15-SA-RAL9005TX-TP
Material: 16 fluted formed aluminum shaft with jet black textured powder coat.
Taper: 0.14 inch/ft
Thickness: 0.156"
Top Size: 4.93" dia.
Pole Height: 15'-0"
Anchor Bolts: See Detail 0910
Bolt Circle: 12.5"
Bolt Projection: 3" high
Vandal proof screws on hand hole.

BASE COVER SPECIFICATIONS:

Catalogue No.: BD81-RAL9005TX
Material: Two-piece cast aluminum cover with vandal proof screws on base cover.

ALL NON-ELECTRICAL HARDWARE SHALL BE STAINLESS STEEL.

WARRANTY

Material and Workmanship: Two (2) year warranty on material and workmanship from the date of shipment.
Paint: Five (5) years against corrosion, peeling and fading of more than 20% of the original gloss.

Anchor Plate

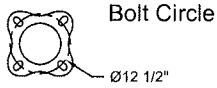

NOTES:

1. Pole and Luminaire as manufactured by Cyclone or approved equal.
2. See Detail 0910 for street light pole foundation requirements.

REVISION	CITY OF WOODLAND COMMUNITY DEVELOPMENT DEPARTMENT ENGINEERING DIVISION	Springlake Streetlight 15' or 18' Pole	0917
Rev foundation reference	APPROVED BY DATE 11/22/10 BRENT MEYER, CITY ENGINEER		

SCALE : n.t.s.	FILE NAME	spec0916–0919

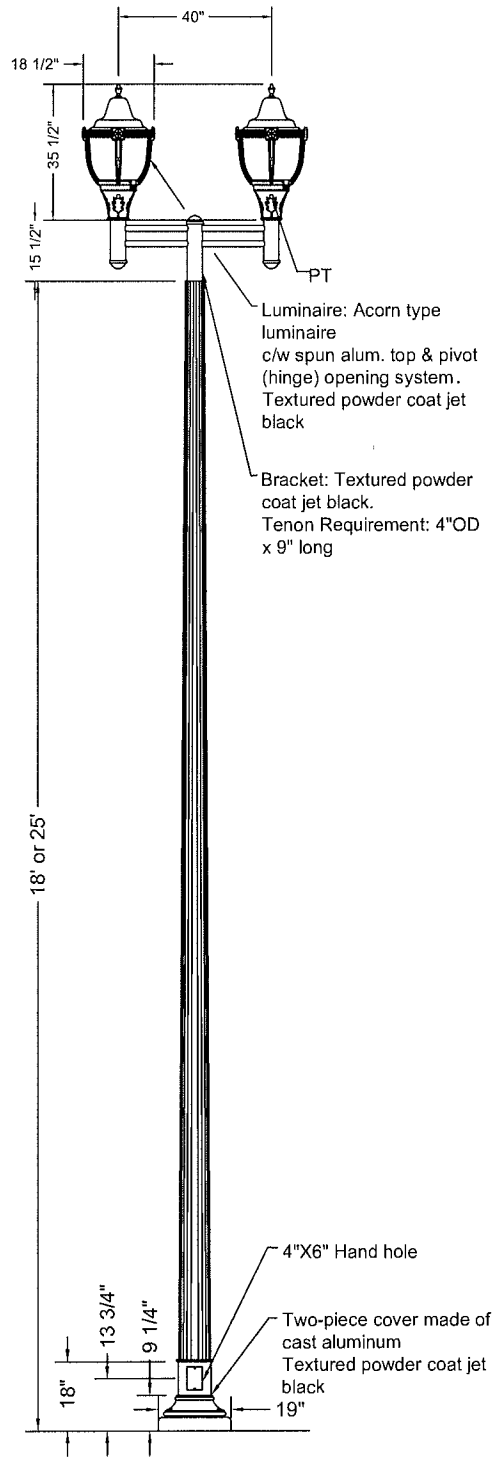

LUMINAIRE SPECIFICATIONS:

Catalogue No.:
CP3164-F6AP-RS3-VS3AR-WATT-QT/VOLT-S1-RAL9005TX-PT
Globe Material: Shall be high impact Acrylic with internal ribs.
IES Classification: Type III Cut-Off.
Wattage: 70,100 or 200
Light Source: High Pressure Sodium (HPS) Luminaire shall have a pre-installed lamp.
Line Voltage: To be determined.
Ballast: Shall be mounted on a stainless steel quick release tray, with medium base socket ballast, starter & capacitor. All components shall have Molex quick connectors. Ballast, lamp and photocell shall be factory tested.
Pole Adapter: Shall be Oak Leaf fitter with square head bolts.
Mounting Hardware: Shall be Square head bolts
IP66: Weatherproof luminaire with "V" grove silicone gasket.
Option: Twist lock photocell shall be pre-installed in fitter.

BRACKET SPECIFICATIONS:

Catalogue No.: CP2479-C2-T40-RAL9005TX
Mounting Hardware: Shall be Square head bolts
Material: Aluminum

POLE SPECIFICATIONS:

Catalogue No.: PAC10-[18 or 25]-SA-RAL9005TX-TP
Material: 16 fluted formed aluminum shaft with jet black textured powder coat.
Taper: 0.14 inch/ft
Thickness: 0.156"
Top Size: 4.93" dia.
Pole Height: 15'-0"
Anchor Bolts: See Detail 0910
Bolt Circle: 12.5"
Bolt Projection: 3" high
Vandal proof screws on hand hole.

BASE COVER SPECIFICATIONS:

Catalogue No.: BD81-RAL9005TX
Material: Two-piece cast aluminum cover with vandal proof screws on base cover.

ALL NON-ELECTRICAL HARDWARE SHALL BE STAINLESS STEEL.

WARRANTY

Material and Workmanship: Two (2) year warranty on material and workmanship from the date of shipment.
Paint: Five (5) years against corrosion, peeling and fading of more than 20% of the original gloss.

Anchor Plate

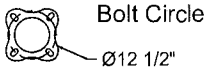

NOTES:

1. Pole and Luminaire as manufactured by Cyclone or approved equal.
2. See Detail 0910 for street light pole foundation requirements.

REVISION	CITY OF WOODLAND COMMUNITY DEVELOPMENT DEPARTMENT ENGINEERING DIVISION	Springlake Streetlight 25' Pole	0918
Rev foundation reference	APPROVED BY DATE 11/22/10 BRENT MEYER, CITY ENGINEER		

SCALE : N.T.S.	FILE NAME	SPEC1000.DWG

CONDUCTOR TABLE

AWG	CIRCUIT	RUN NUMBER 1	2	3	4	5	6	7
	ø 1 VEHICLE		3	3	3	3	3	
	ø 2 VEHICLE				3	3	3	
	ø 3 VEHICLE	3	3	3 (3)				3
	ø 4 VEHICLE	(3)	(3)	(6)	3	3	3	
	ø 5 VEHICLE					6	3	
	ø 6 VEHICLE		3	3				
	ø 7 VEHICLE				3	3	3	
	ø 8 VEHICLE				(3)	(3)		3
#14	ø 2 PED				2	2	2	
	ø 4 PED	2	2	2	2	2	2	
	ø 6 PED		2	4				
	ø 8 PED				4	2		
	ø 2 PPB				1	1	1	
	ø 4 PPB	1	1	1	1	1	1	
	ø 6 PPB	1	1	2				
	ø 8 PPB				2	1		
	PPB NEUTRAL	1	1	1	1	1	1	
	PEC		3	3				
	SPARES	3	3	3	3	3	3	
	TOTAL #14	14	25	34	31	34	25	6
#12								
	TOTAL #12	0	0	0	0	0	0	0
	LUMINAIRES		2	2	2	2	2	2
#10	COUNT STATION							
	SIGNAL COMMON	1	1	1	1	1	1	
	TOTAL #10	1	3	3	3	3	3	2
	EVA			1				
EVPM	EVB			1			1	
	EVC		1	1				
	EVD							1
	TOTAL EV CABLES	0	1	3	0	0	1	1
	ø 1	1						
	ø 2			(1)	3	3	3	
	ø 3				1	1	1	
	ø 4	1	1	1				
CABLES	ø 5		1	1				
	ø 6			3				
	ø 7							1
	ø 8				2	2		
	C19U	1						
	C19L							
	CJ9U							
	CJ9L							
	TOTAL DLC	3	2	6	6	6	4	1
SIC	SIC							
	TOTAL SIC							
	% FILLED	14 %	25 %	21 %	16 %	37 %	36 %	10 %
CONDUIT SIZE		2"	2"	3"	3"	2"	2"	2"

NO.	REVISION	BY

CITY OF WOODLAND
PUBLIC WORKS DEPARTMENT
ENGINEERING DIVISION

APPROVED BY
DATE 11/05/07 DICK DONNELLY, CITY ENGINEER

CONDUIT SCHEDULE

1000

SCALE : N.T.S.	FILE NAME	SPEC1010.DWG

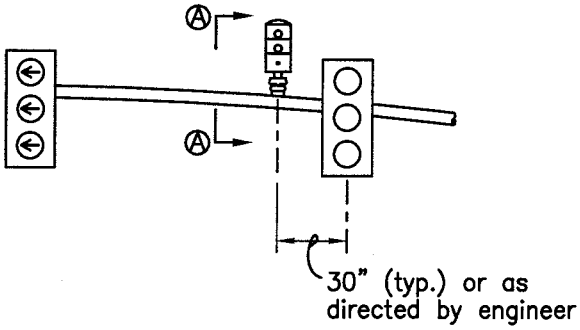

WITH LEFT TURN POCKET

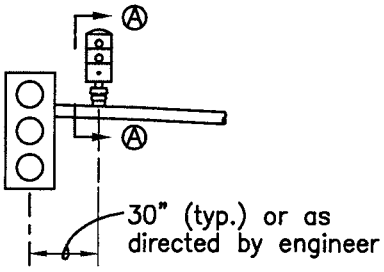

WITH OUT LEFT TURN POCKET

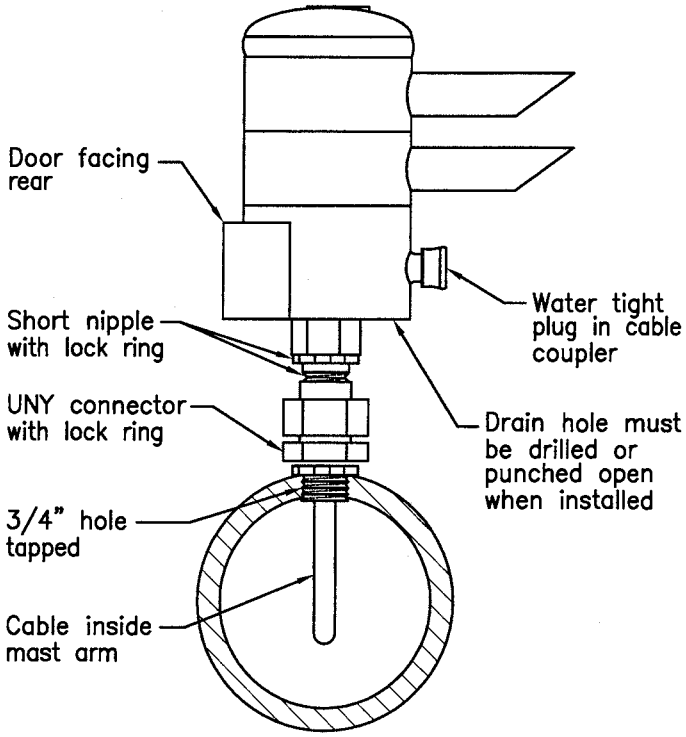

SECTION A–A

MAST ARM MOUNTING LOCATIONS

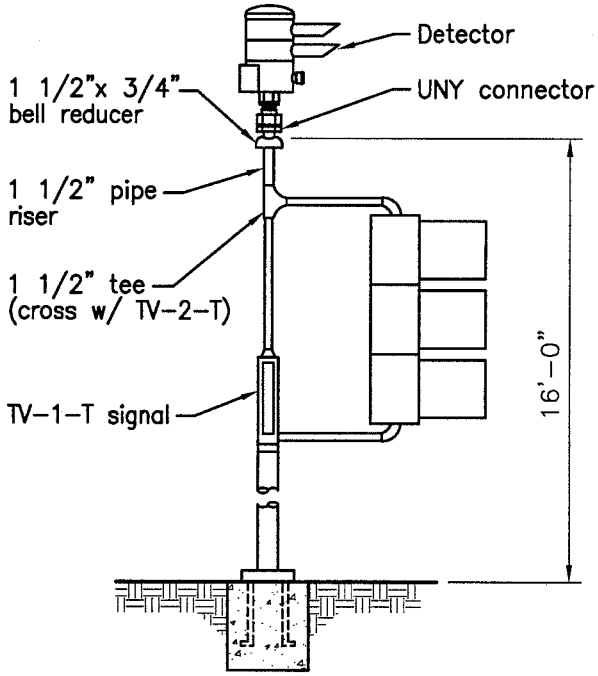

I–B MOUNTING LOCATION

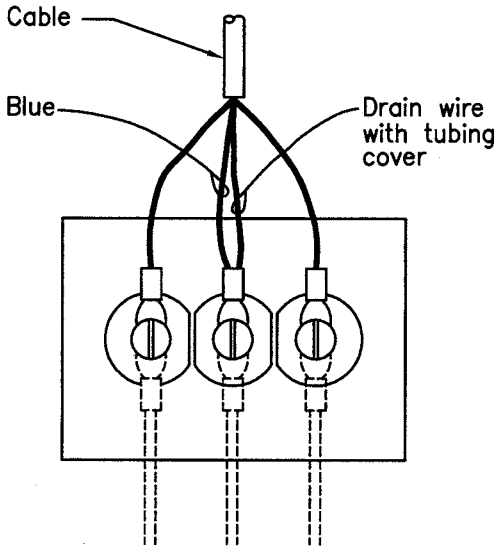

CABLE CONNECTION DETAIL

NO.	REVISION	BY

CITY OF WOODLAND
PUBLIC WORKS DEPARTMENT
ENGINEERING DIVISION

APPROVED BY
DATE 11/05/07 DICK DONNELLY, CITY ENGINEER

MOUNTING & WIRING DETAILS MODEL 205 OPTICAL DETECTOR

1010

SCALE :	NTS	FILE NAME	fiber.dwg

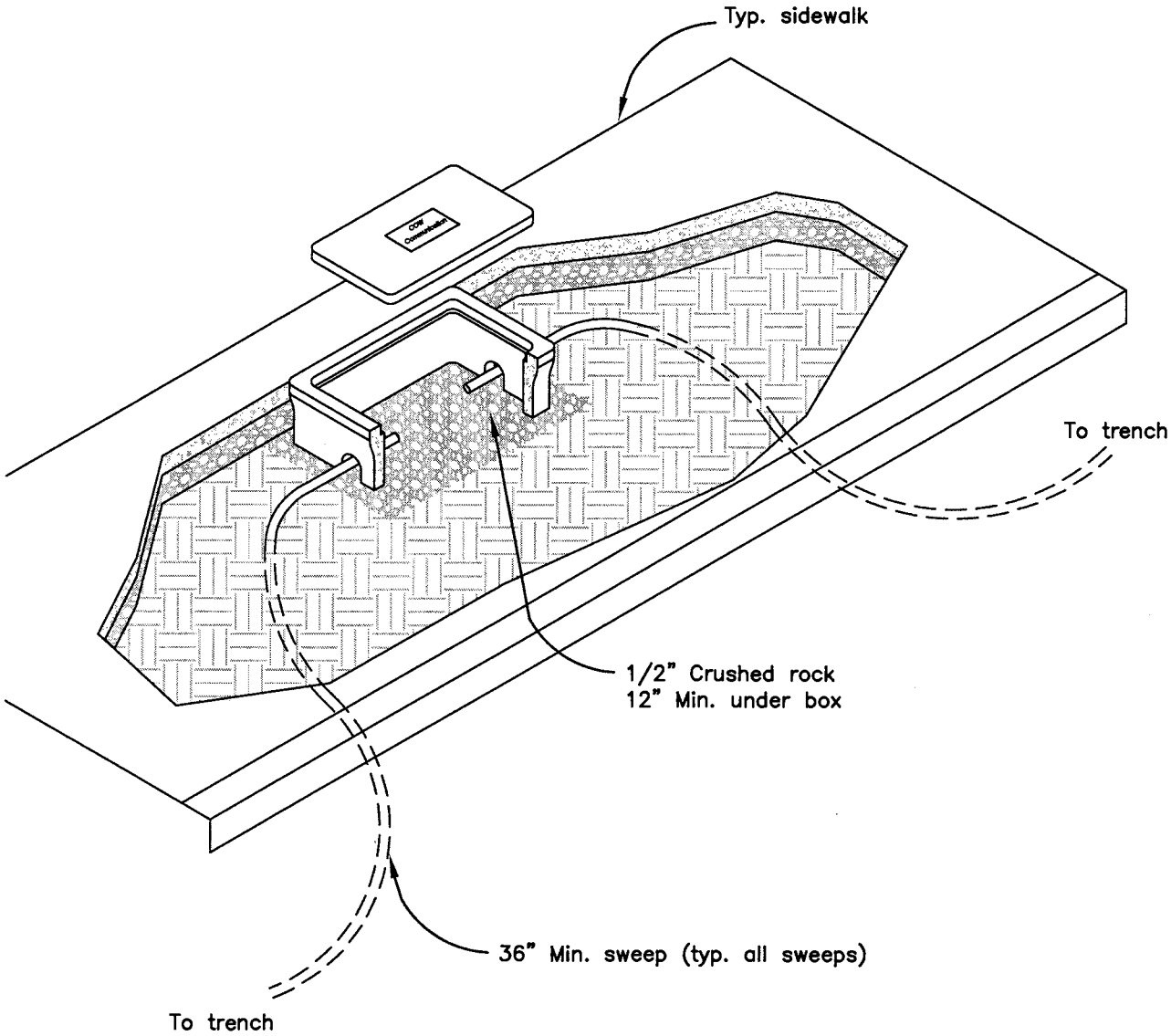

NOTES:

1. Interconnect pull boxes to be spaced at 350' Max.
2. Inline pull boxes in non-traffic areas to be Christy PTS1730 or approved equal.
   Inline pull boxes in traffic areas to be Christy B1730 or approved equal.
3. Pull boxes at junctions in non-traffic areas to be Christy PTS3048 or approved equal.
   Pull boxes at junctions in traffic areas to be Christy B30" X 48" or approved equal.
4. Pull boxes must meet Caltrans Specifications for traffic and non-traffic areas.
5. Top of pull box to be set at existing grade.
6. Pull box shall have bolt down lid stamped COW COMMUNICATIONS.
7. Conduit shall be 2" Dia.
8. Conduit sweeps shall be a Min. of 36"

NO.	REVISION	BY

CITY OF WOODLAND
PUBLIC WORKS DEPARTMENT
ENGINEERING DIVISION

APPROVED BY
DATE 11/05/07 DICK DONNELLY, CITY ENGINEER

FIBER OPTICS & SIGNAL INTERCONNECT PULL BOXES

1015

{Blank Page}

SCALE :	FILE NAME	spec1200.dwg

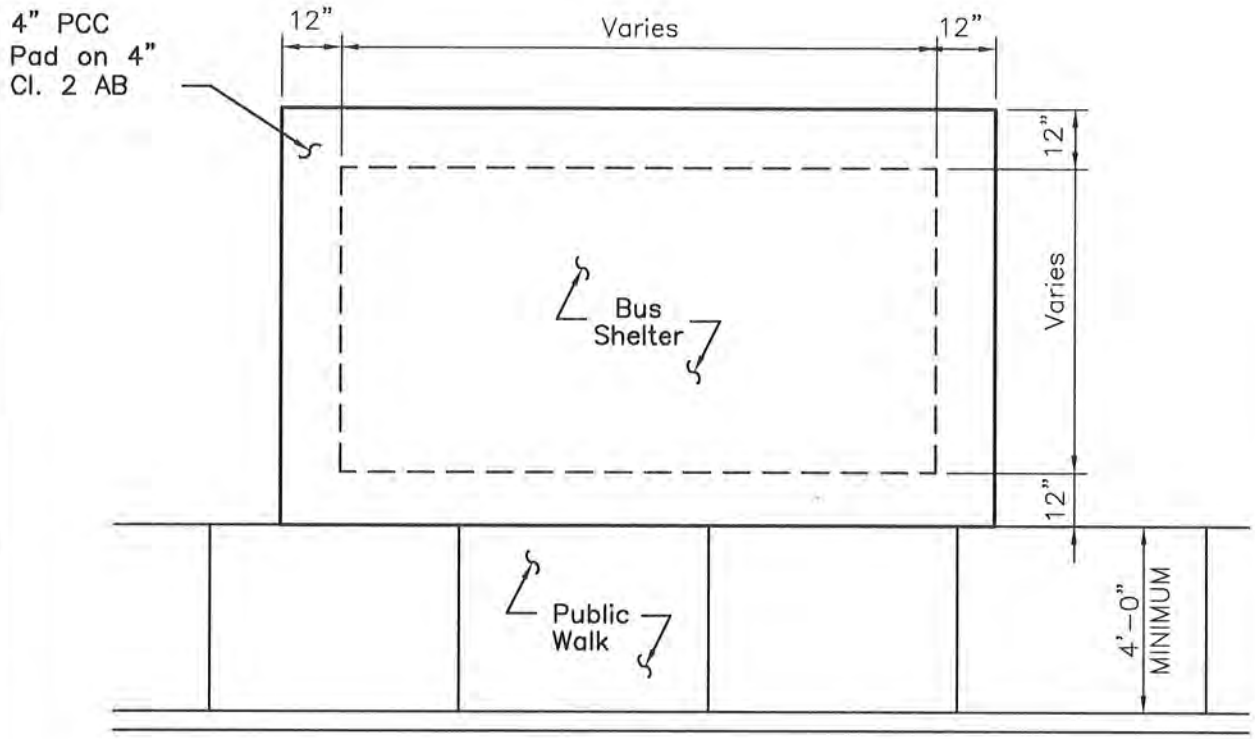

BUS SHELTER PLACEMENT

NOTES:

1. Contact Yolo County Transportation District for bus shelter details.
2. Bus pad must extend beyond the footprint of the shelter by 12" in all directions.
3. Doweling is required if pad is not poured continuously with sidewalk. See Standard Detail 0315 "Stage Construction" for doweling requirements.

REVISION			
Revised to eliminate shelter details and reference YCTD	CITY OF WOODLAND COMMUNITY DEVELOPMENT DEPARTMENT ENGINEERING DIVISION APPROVED BY DATE 03/23/10 BRENT MEYER, CITY ENGINEER	Bus Shelter Pad	1200

{Blank Page}

SCALE :	FILE NAME	spec1304.dwg

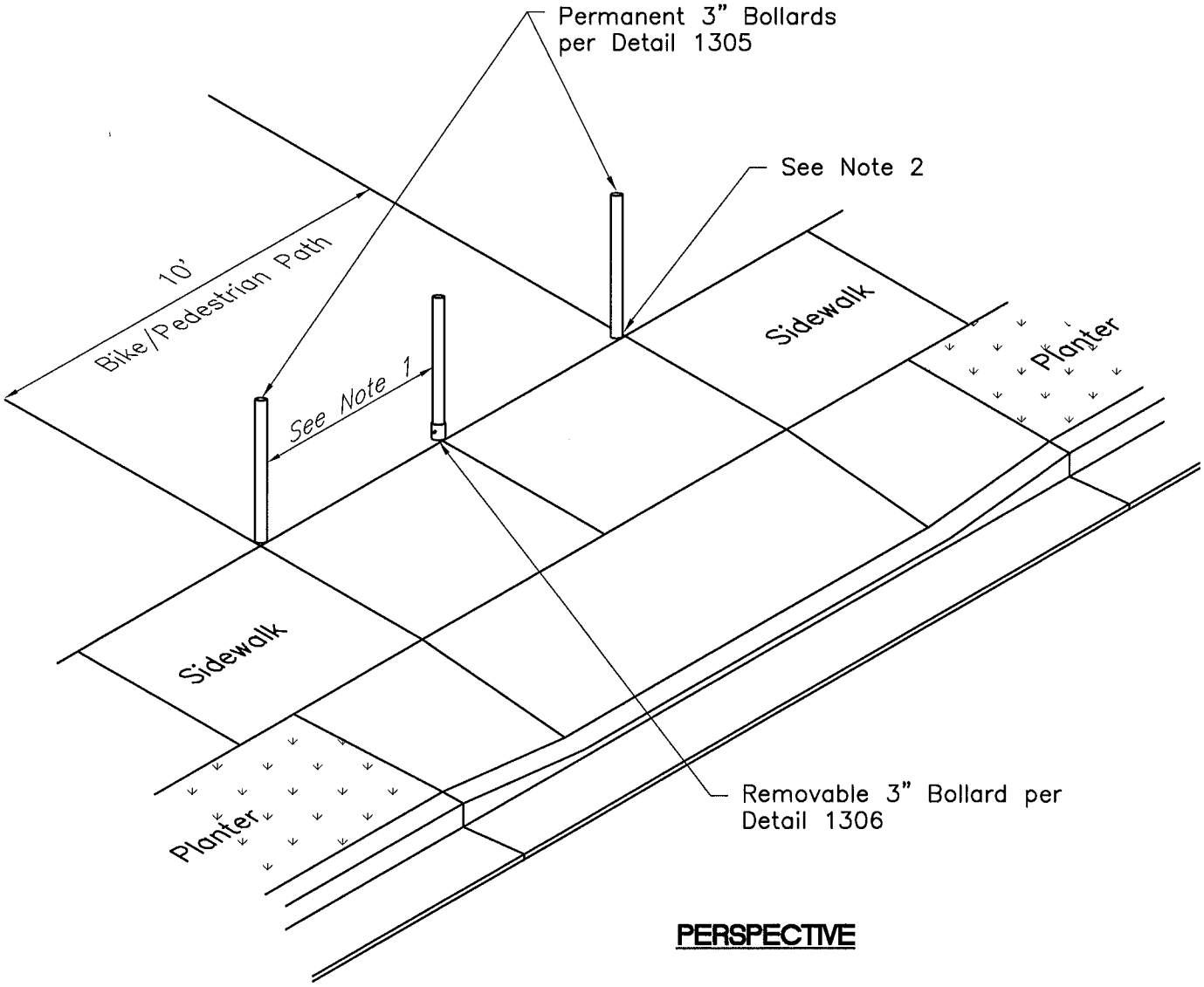

PERSPECTIVE

NOTES:

1. Provide a minimum 4'–6" clear distance between interior bollards to maintain a minimum 9'–3" clear distance between outer bollards.
2. Bollard installation shall be at the front edge of sidewalk if the sidewalk is a Class I Path. For all other installations, bollards shall be at the back edge of walk.
3. When bollards are used for emergency vehicle access, design and placement must be approved by the City Engineer and Fire Department.
4. Provide bollards at all connections to roadways or wherever the bike path has access to an adjacent roadway.

REVISION			
Require 3" bollard size	CITY OF WOODLAND COMMUNITY DEVELOPMENT DEPARTMENT ENGINEERING DIVISION APPROVED BY DATE 11/22/10 BRENT MEYER, CITY ENGINEER	Bollard Placement	1304

SCALE : n.t.s.	FILE NAME	spec1305.dwg

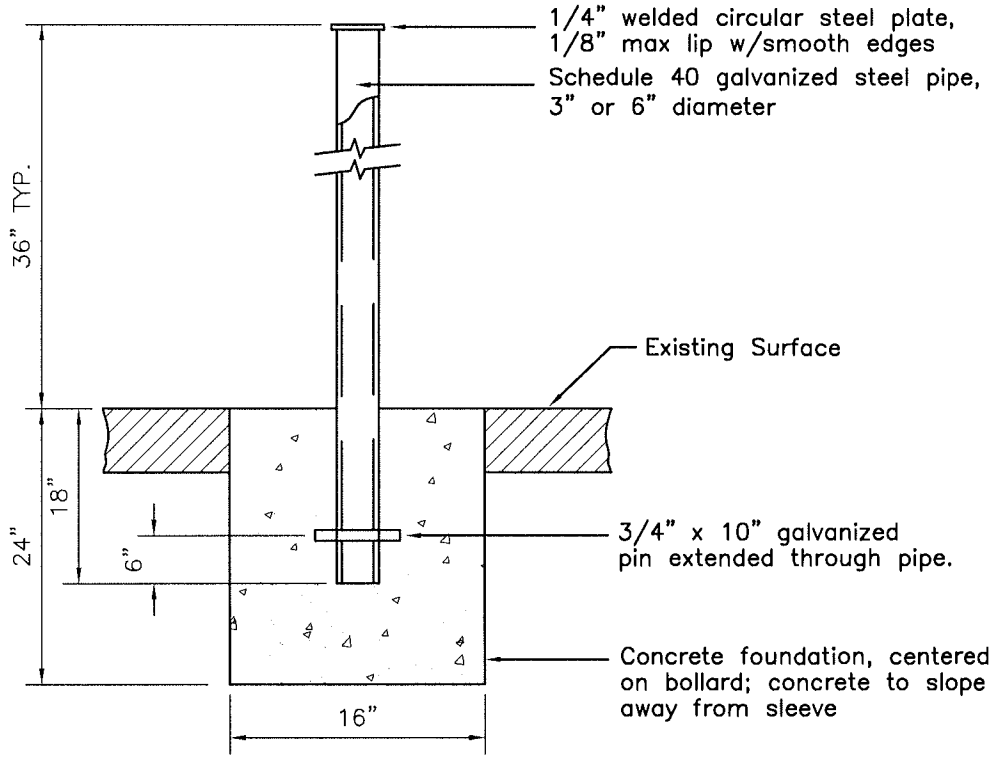

NOTES

1. Bollard shall be spray painted with 2 coats of high gloss white rust inhibitive paint. on top of 1 coat of primer.
2. For concrete specifications see Section 5 of the Materials and Construction Methods of these Standard Specifications.
3. See Detail 1304 for bollard placement standards.

REVISION	CITY OF WOODLAND COMMUNITY DEVELOPMENT DEPARTMENT ENGINEERING DIVISION	Permanent Bollard	1305
Add Note 3, Revise Title Add 6" size	APPROVED BY DATE 03/23/10 BRENT MEYER, CITY ENGINEER		

SCALE : n.t.s.	FILE NAME	spec1306.dwg

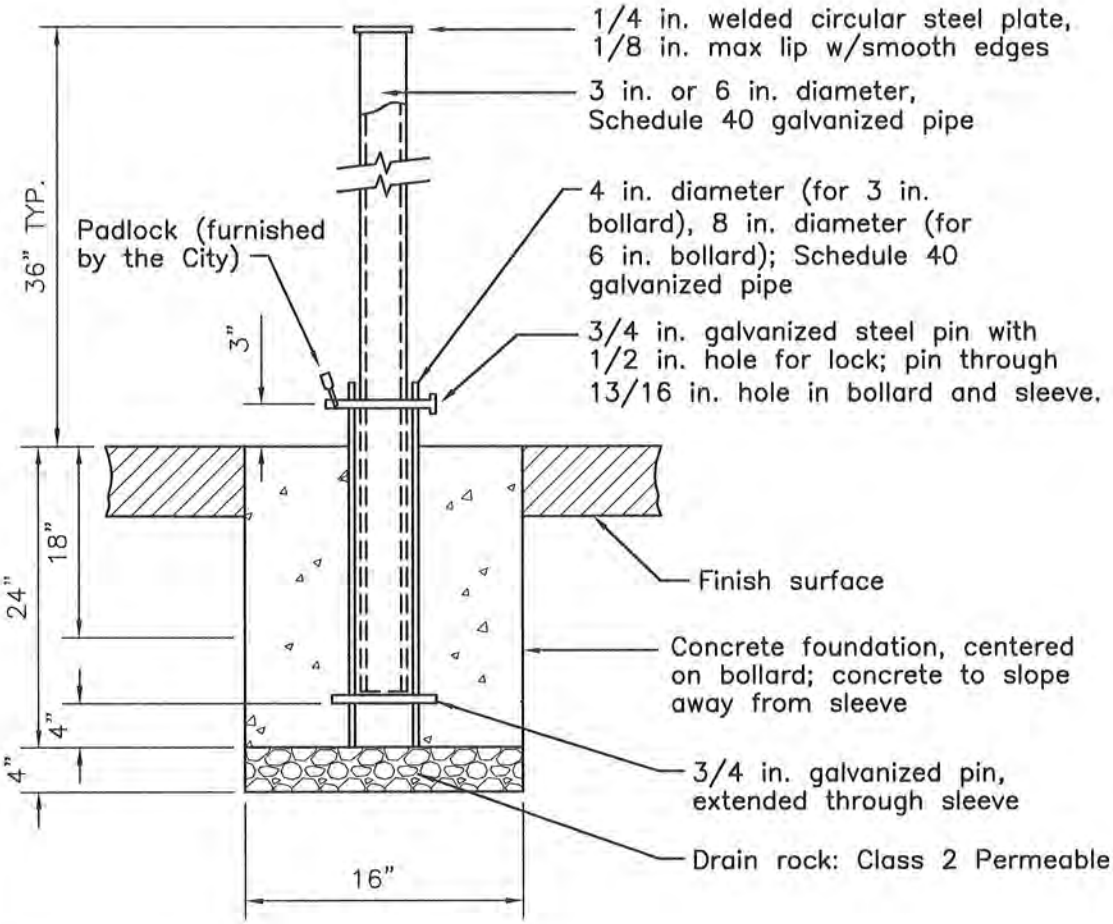

NOTES

1. Bollard shall be spray painted with 2 coats of high gloss white rust inhibitive paint. on top of 1 coat of primer.
2. For concrete specifications see Section 5 of the Materials and Construction Methods of these Standard Specifications.
3. See Detail 1304 for bollard placement standards.

REVISION			
Add Note 3, add 6" size	CITY OF WOODLAND COMMUNITY DEVELOPMENT DEPARTMENT ENGINEERING DIVISION APPROVED BY DATE 03/23/10 BRENT MEYER, CITY ENGINEER	Removable Bollard	1306

SCALE : N.T.S.	FILE NAME	SPEC1315.DWG

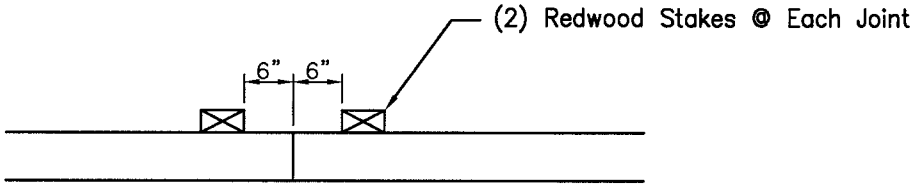

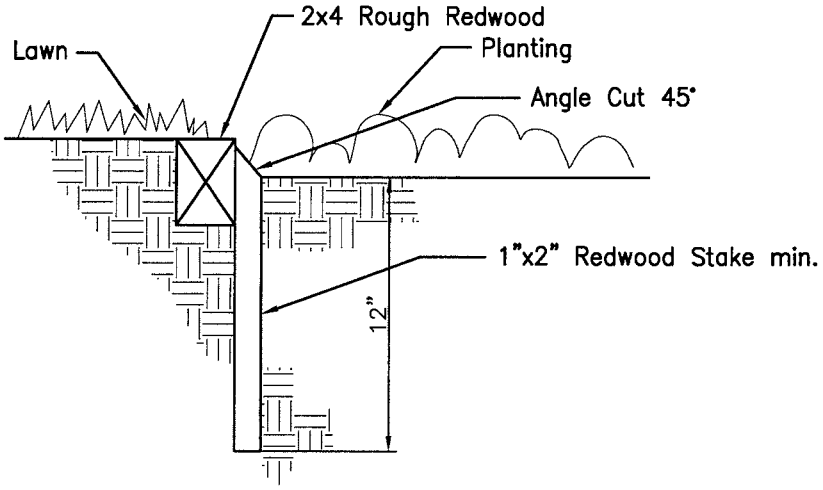

HEADER BOARD/STRAIGHT LINE

NO.	REVISION	BY

CITY OF WOODLAND
PUBLIC WORKS DEPARTMENT
ENGINEERING DIVISION

APPROVED BY
DATE 11/05/07 DICK DONNELLY, CITY ENGINEER

HEADER BOARD

1315

SCALE : n.t.s.	FILE NAME	spec1318.dwg

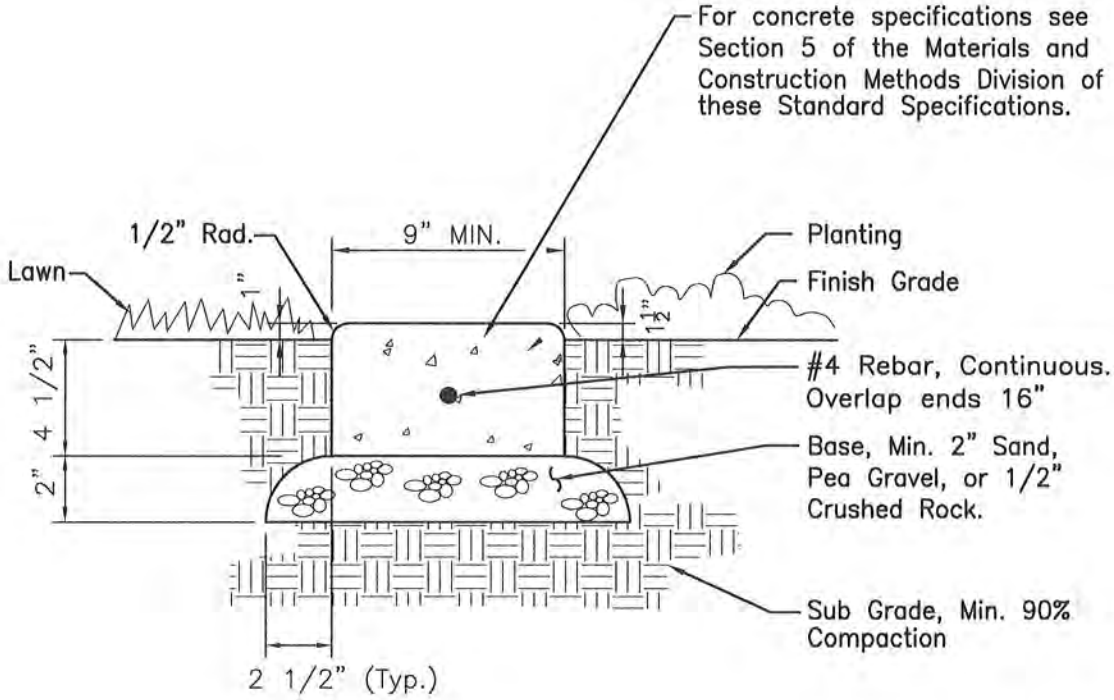

CONCRETE MOW STRIP

NOTES:

1. Mow strips shall be required at all locations where shrub/groundcover planting beds are directly adjacent to turf areas unless shrub areas are determined to be a temporary treatment.

2. Provide Score Joints @ 10'–0" O.C. and Expansion Joints @ 20'–0" O.C.

REVISION	CITY OF WOODLAND COMMUNITY DEVELOPMENT DEPARTMENT ENGINEERING DIVISION	Concrete Mow Strip	1318
Added 2 notes	APPROVED BY DATE 03/23/10 BRENT MEYER, CITY ENGINEER		

SCALE : n.t.s.	FILE NAME	spec1319.dwg

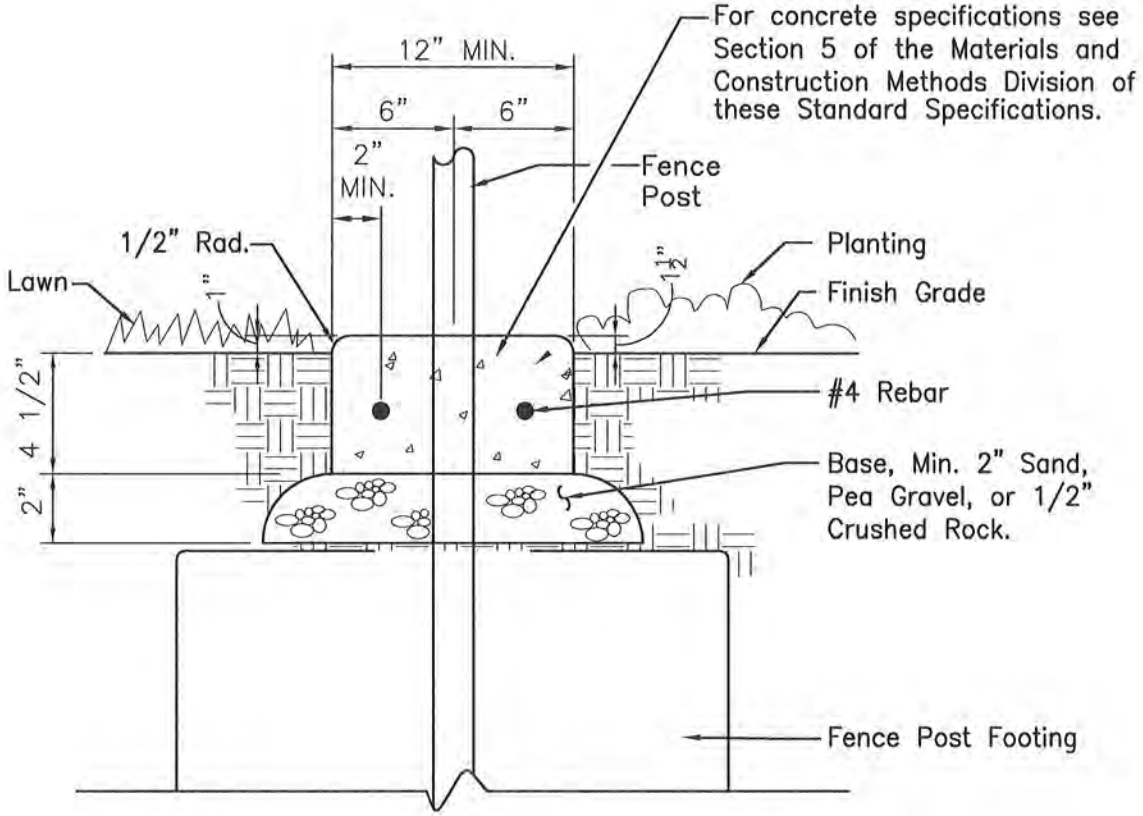

CONCRETE MOW STRIP AT FENCE

NOTES:

1. Mow strips shall be required below all fencing located within turf areas.
2. Provide Score Joints at Each Fence Post (10'–0" Max. Spacing) and Expansion Joints at Every Other Fence Post (20'–0" Max. Spacing).

REVISION			
New Detail	CITY OF WOODLAND COMMUNITY DEVELOPMENT DEPARTMENT ENGINEERING DIVISION APPROVED BY DATE 03/23/10 BRENT MEYER, CITY ENGINEER	Concrete Mow Strip At Fence	1319

SCALE : n.t.s.	FILE NAME	spec1320.dwg

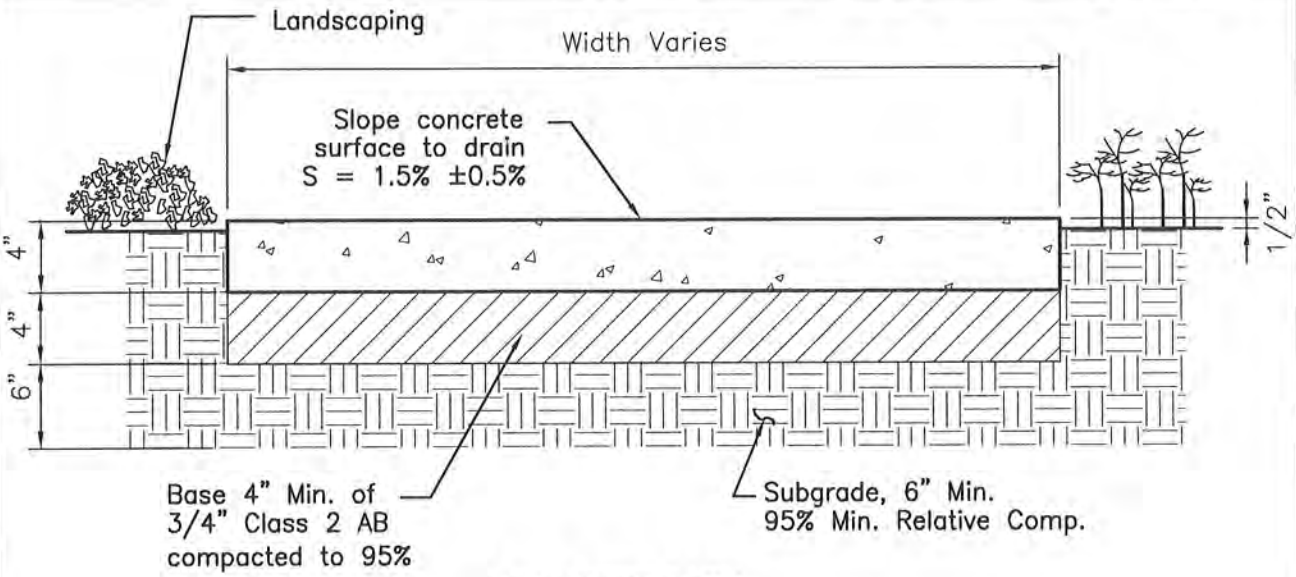

CONCRETE PATH

(On-Site Only)

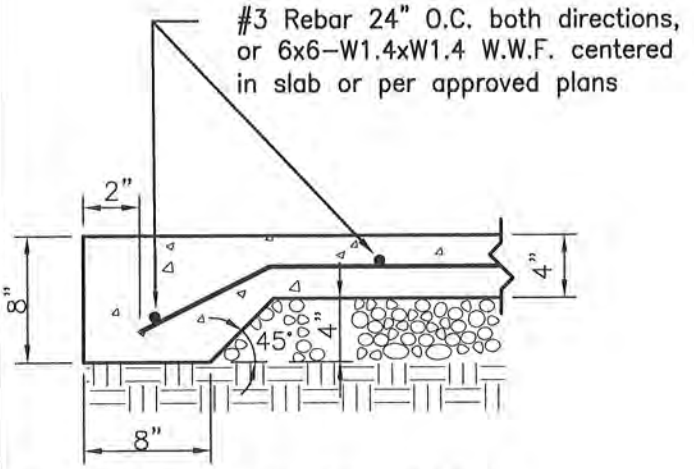

REINFORCED CONCRETE PATH

(See note 2)

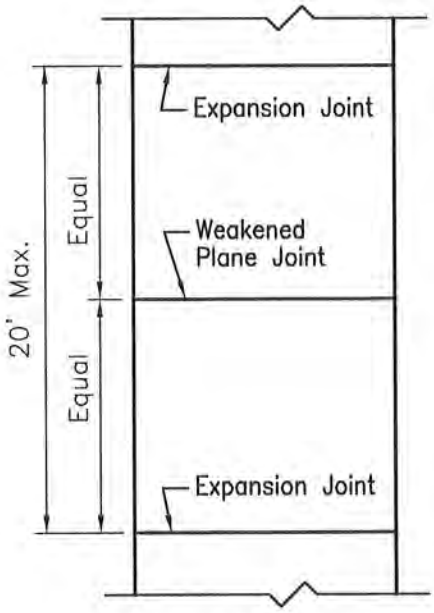

PLAN VIEW

NOTES:

1. See Section 5, Materials and Construction Methods, (MCM) for concrete requirements.
2. Some concrete paths may require thicker-reinforced sections to accomodate heavier maintenance vehicles as designated by the City Engineer.
3. Concrete paths for vehicle traffic must be minimum 8' wide.

REVISION			
Revise x-slope,	CITY OF WOODLAND COMMUNITY DEVELOPMENT DEPARTMENT ENGINEERING DIVISION	Concrete Path	1320
Revise Notes 2 & 3	APPROVED BY DATE 03/23/10 BRENT MEYER, CITY ENGINEER		

SCALE : n.t.s.	FILE NAME	spec1322.dwg

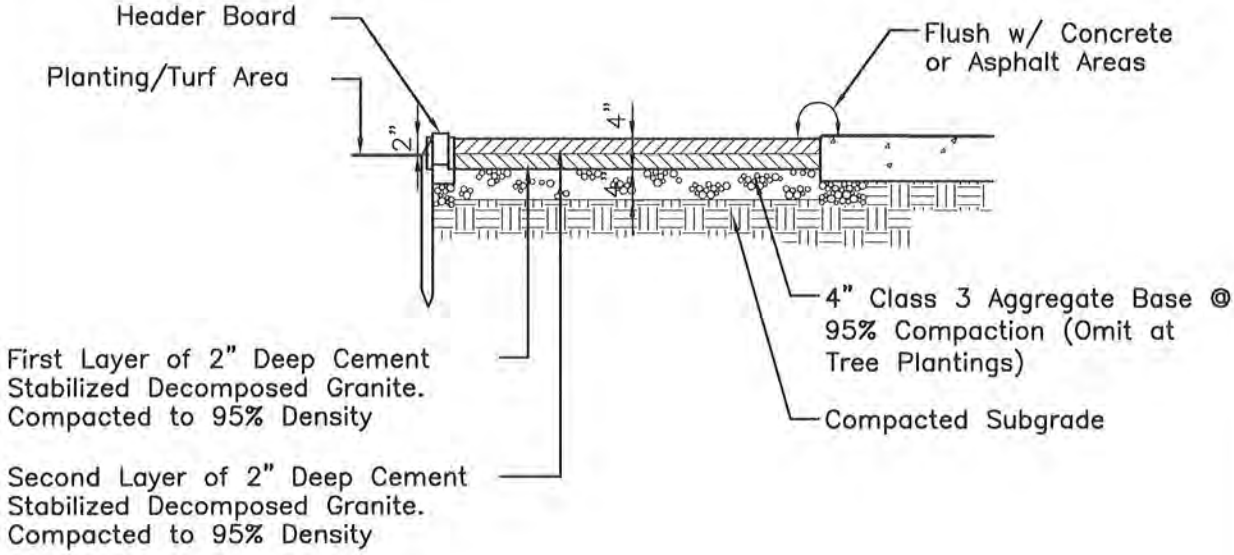

NOTE:
First Layer of D.G. Paving Shall be Compacted Before Installation of Second Layer

REVISION			
New detail	CITY OF WOODLAND COMMUNITY DEVELOPMENT DEPARTMENT ENGINEERING DIVISION APPROVED BY DATE 03/23/10 BRENT MEYER, CITY ENGINEER	Decomposed Granite Path	1322

SCALE : n.t.s.	FILE NAME	spec1325.dwg

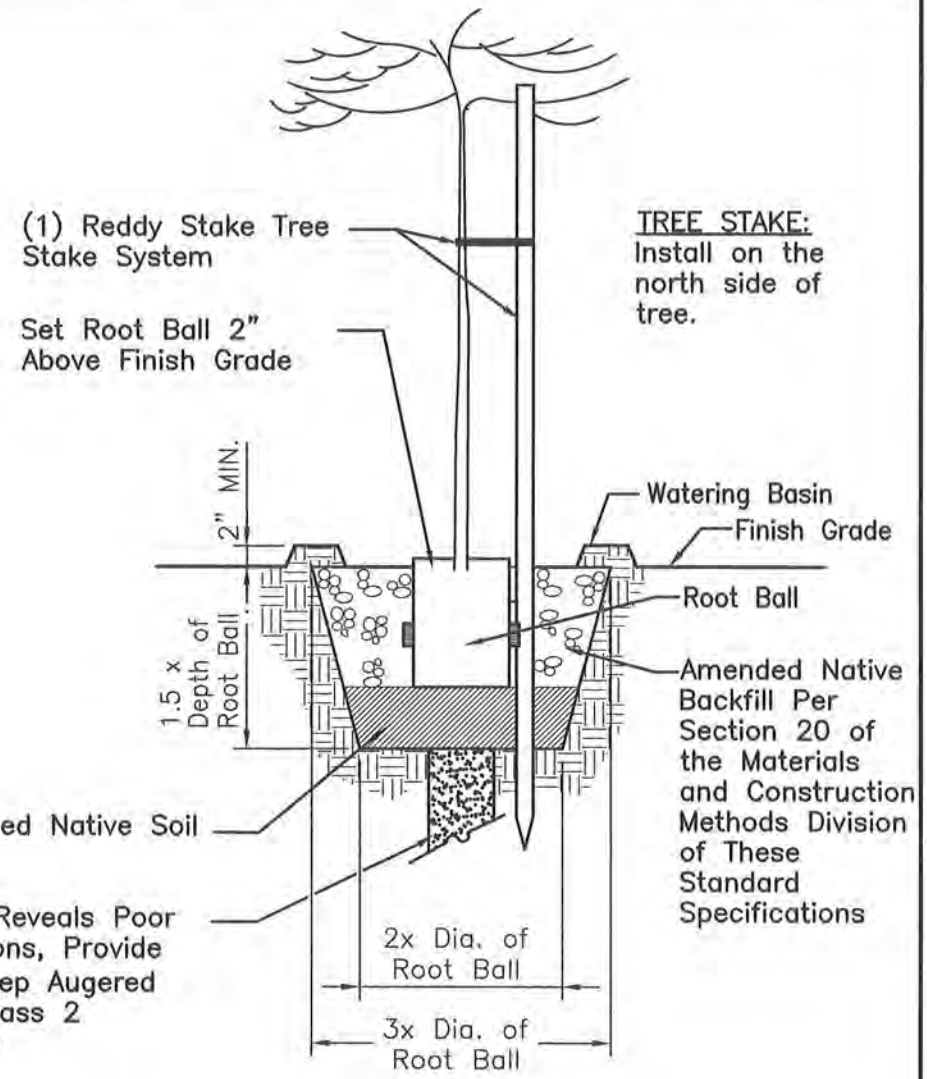

TREE PLANTING

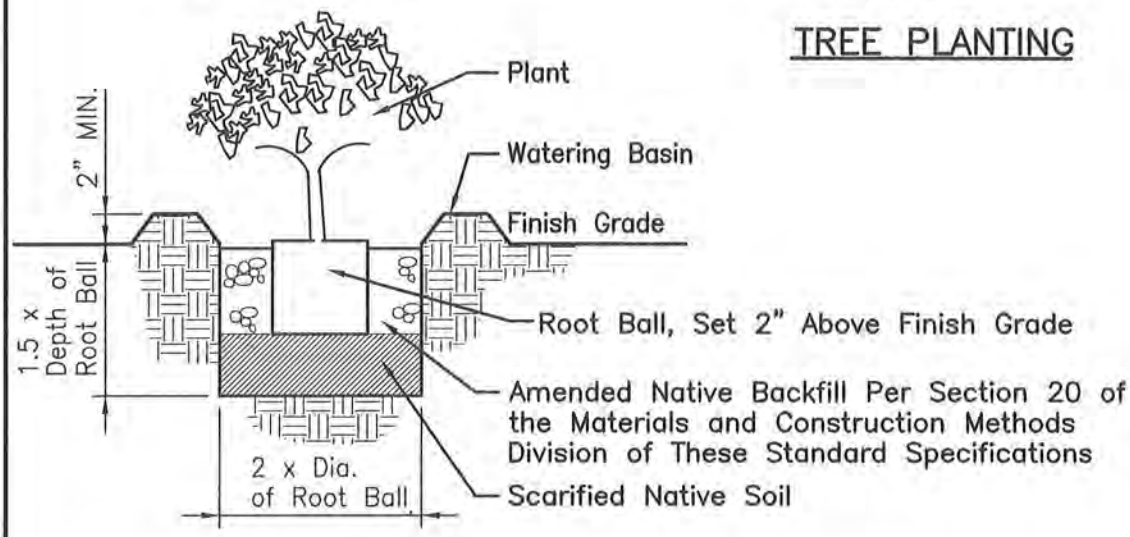

SHRUB PLANTING

REVISION			
Revised tree staking	CITY OF WOODLAND COMMUNITY DEVELOPMENT DEPARTMENT ENGINEERING DIVISION APPROVED BY DATE 12/12/11 BRENT MEYER, CITY ENGINEER	Tree and Shrub Planting	1325

SCALE : n.t.s.	FILE NAME	spec1330.dwg

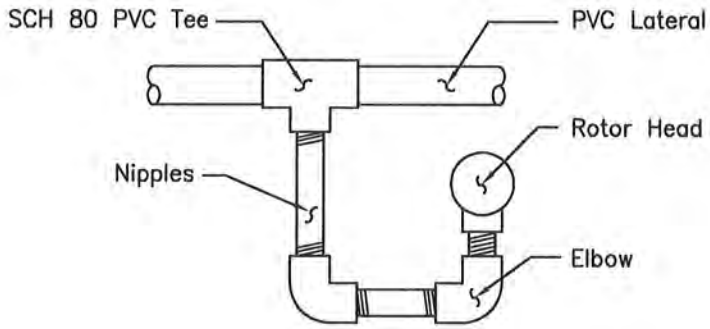

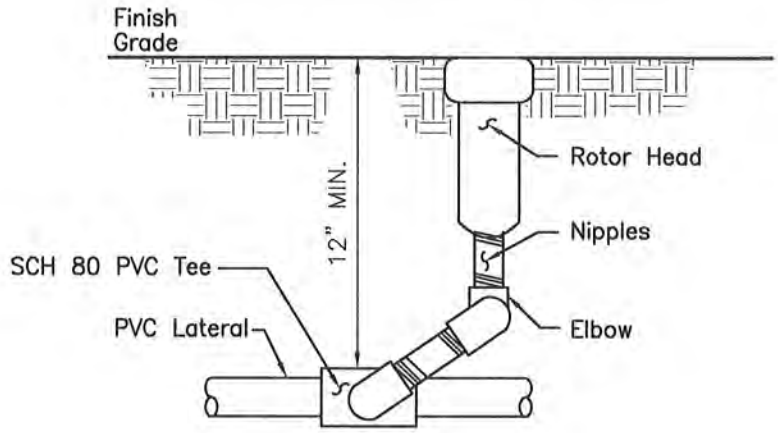

NOTE:

1. All Nipples and Joints to be Schedule 80 PVC.
2. Use Pre-manufactured swing joints, SCH 80 Rainbird or equal

TRIPLE SWING JOINT WITH ROTOR

REVISION	CITY OF WOODLAND COMMUNITY DEVELOPMENT DEPARTMENT ENGINEERING DIVISION	Rotor Sprinklers	1330
Retitled and revised	APPROVED BY DATE 03/23/10 BRENT MEYER, CITY ENGINEER		

SCALE : n.t.s.	FILE NAME	spec1332.dwg

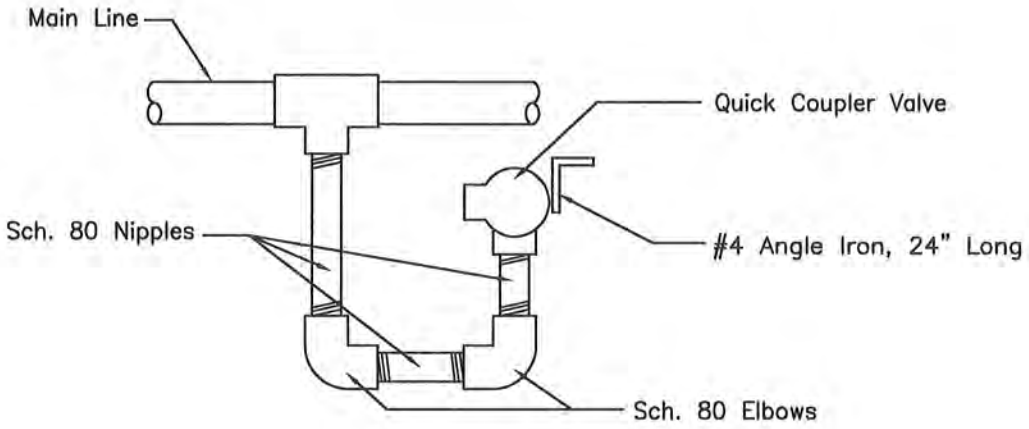

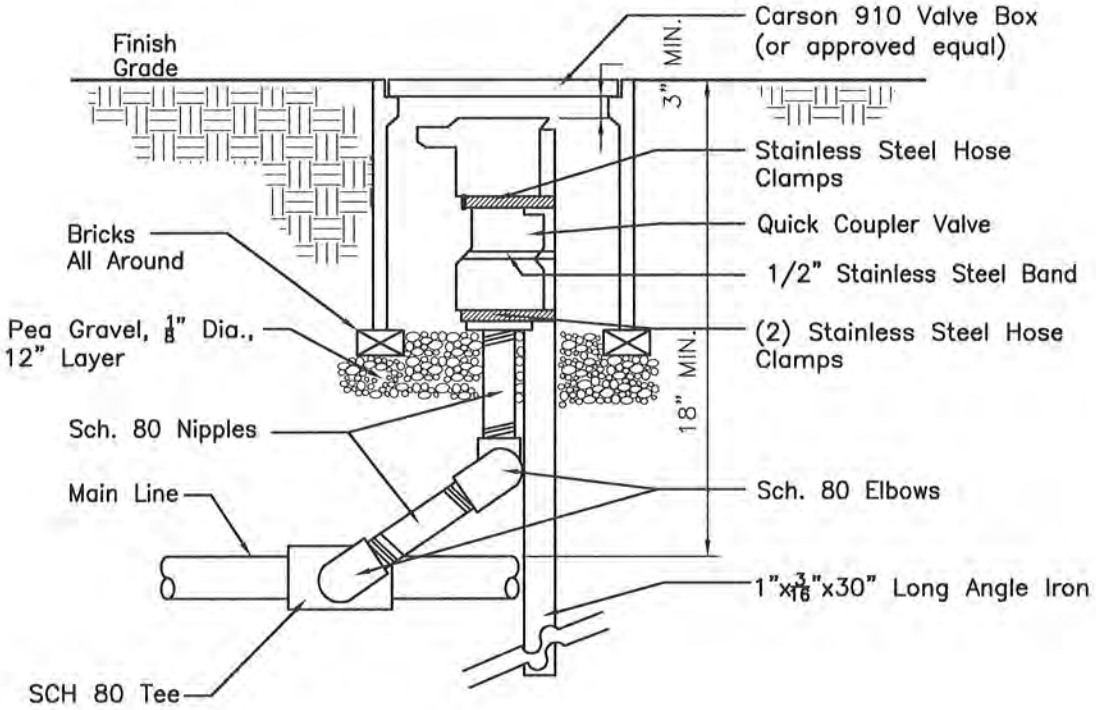

REVISION			
Angle iron anchor, other misc. revisions	CITY OF WOODLAND COMMUNITY DEVELOPMENT DEPARTMENT ENGINEERING DIVISION APPROVED BY DATE 03/23/10 BRENT MEYER, CITY ENGINEER	Quick Coupler Valve	1332

SCALE : n.t.s.	FILE NAME	spec1334.dwg

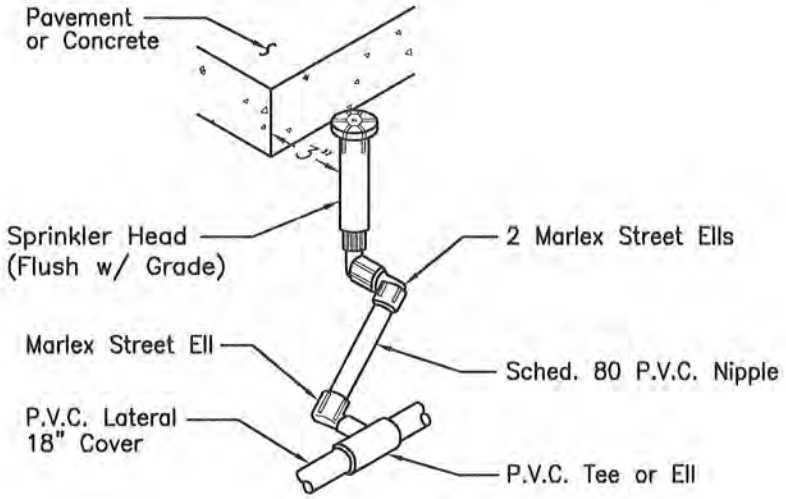

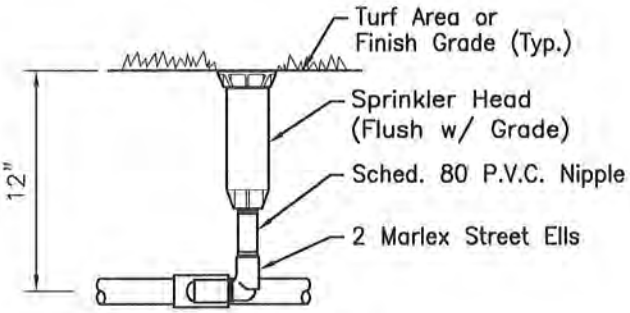

4" HIGH POP-UP

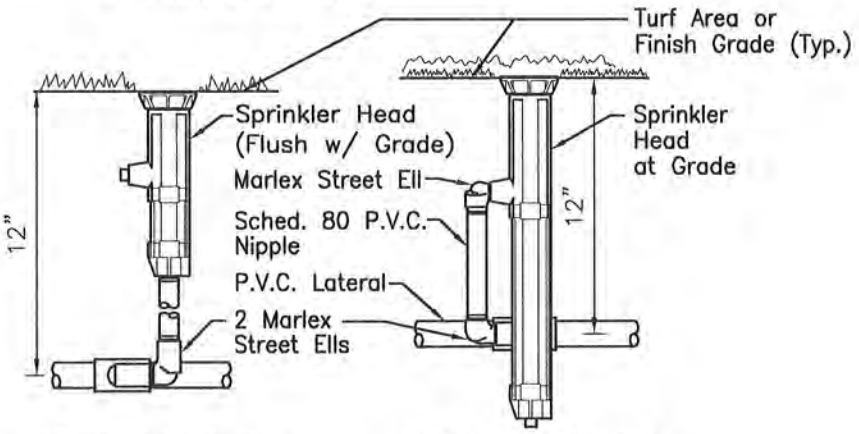

6" HIGH POP-UP 12" HIGH POP-UP

NOTE: All Nipples and Joints to be Schedule 80 PVC.

REVISION			
Revise Title, delete type C	CITY OF WOODLAND COMMUNITY DEVELOPMENT DEPARTMENT ENGINEERING DIVISION APPROVED BY: DATE 03/23/10 BRENT MEYER, CITY ENGINEER	Installation of Sprinkler Heads	1334

SCALE : n.t.s.	FILE NAME	spec1335.dwg

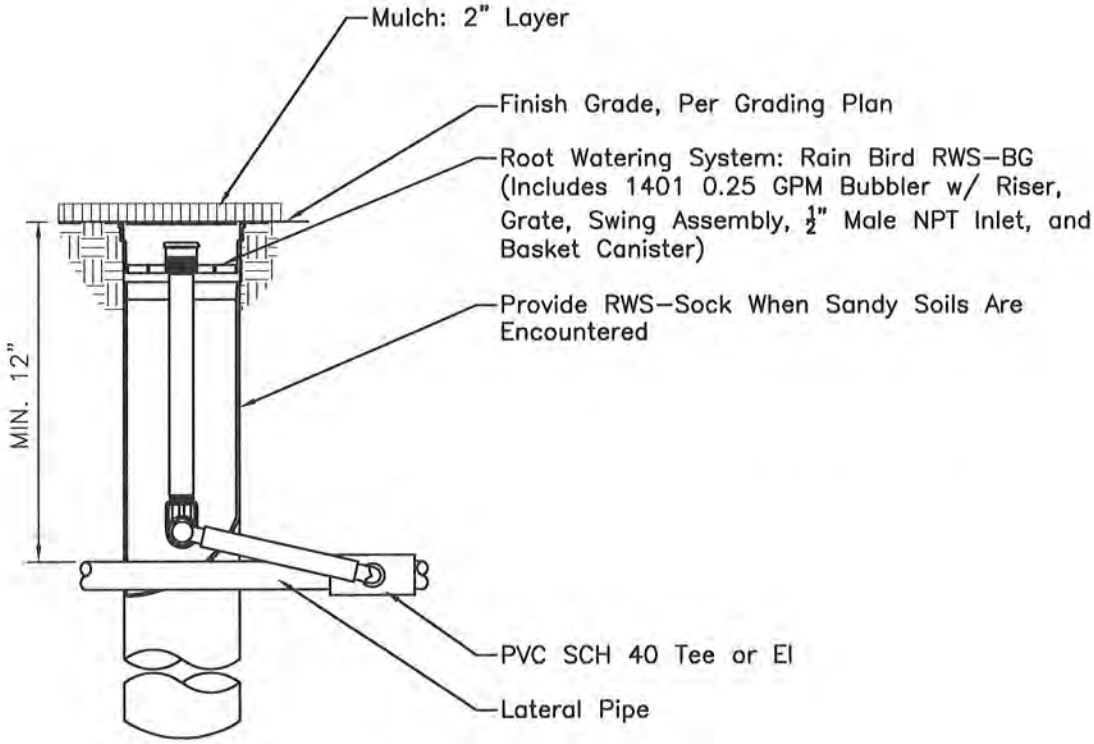

NOTE:
Use Teflon Tape At All Threaded Fittings

REVISION	CITY OF WOODLAND COMMUNITY DEVELOPMENT DEPARTMENT ENGINEERING DIVISION	Tree Bubbler	1335
New detail	APPROVED BY DATE 03/23/10 BRENT MEYER, CITY ENGINEER		

SCALE : n.t.s.	FILE NAME	spec1338.dwg

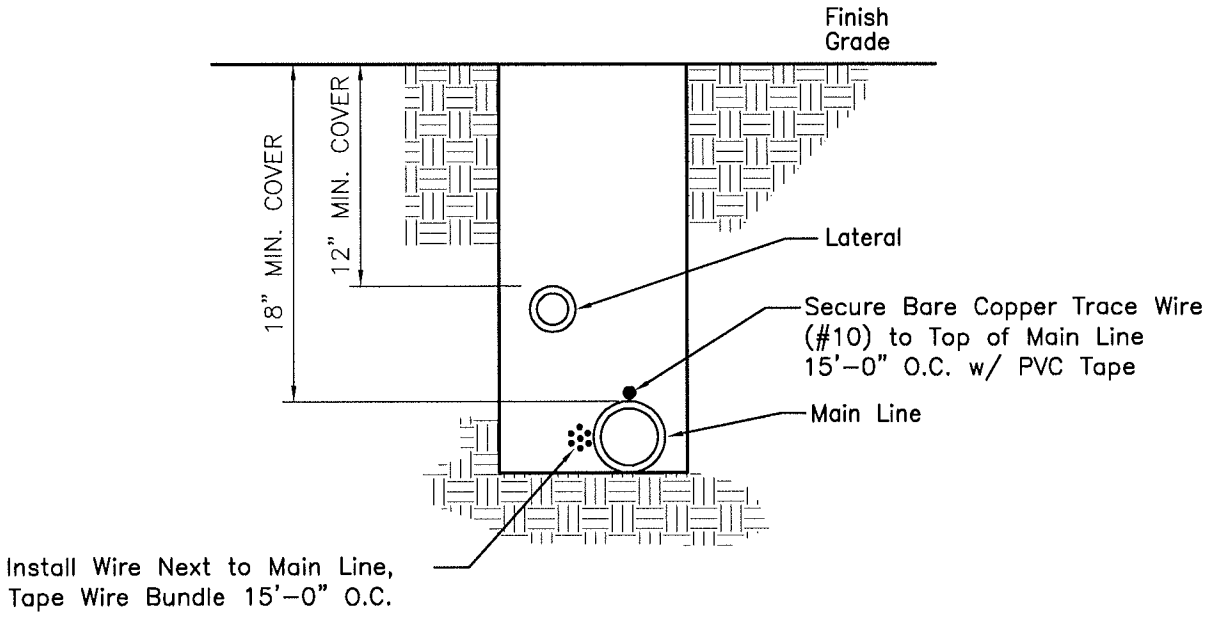

TRENCH SECTION

REVISION	CITY OF WOODLAND COMMUNITY DEVELOPMENT DEPARTMENT ENGINEERING DIVISION	Main, Lateral and Control Wire Trench Layout	1338
Move control wire location, add tracer wire	APPROVED BY DATE 03/23/10 BRENT MEYER, CITY ENGINEER		

SCALE : n.t.s.	FILE NAME	spec1339.dwg

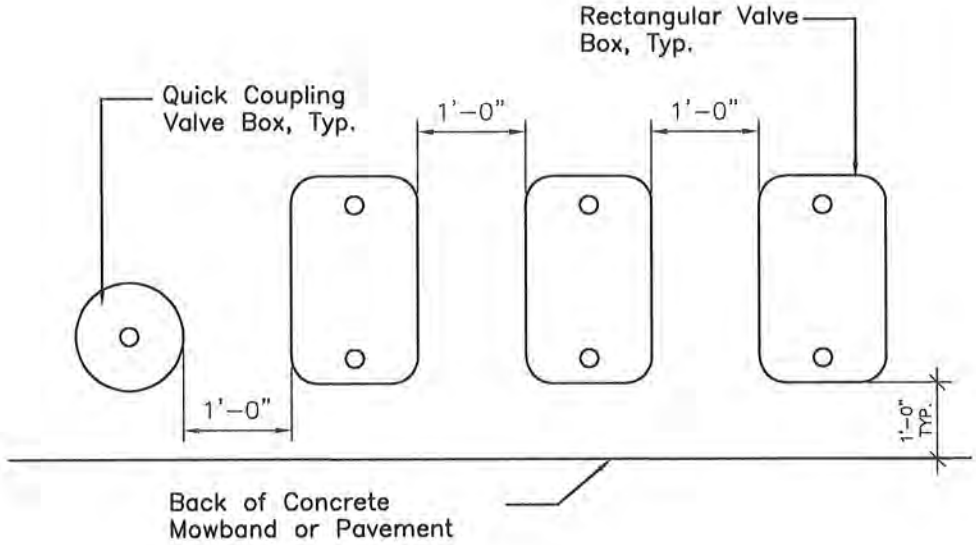

Notes:

1. Center Valve Box Over Remote Control Valve to Facilitate Servicing Valve.
2. Set RCV and Valve Box Assembly in Groundcover/Shrub Areas.
3. Set Boxes Parallel to Each Other and Perpendicular to Edge of Adjacent Paving.
4. Avoid Heavily Compacting Soil Around Valve Boxes to Prevent Collapse and Deformation of Valve Boxes.

REVISION			
New detail	CITY OF WOODLAND COMMUNITY DEVELOPMENT DEPARTMENT ENGINEERING DIVISION APPROVED BY DATE 03/23/10 BRENT MEYER, CITY ENGINEER	Valve Box Layout	1339

SCALE : n.t.s.	FILE NAME	spec1340.dwg

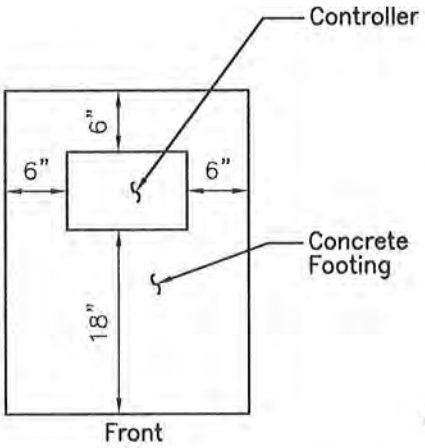

PLAN VIEW

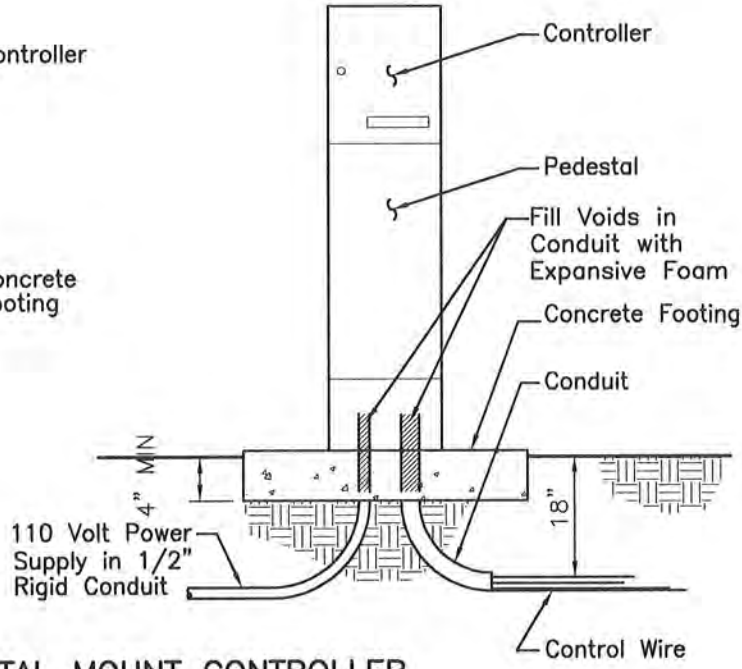

PEDESTAL MOUNT CONTROLLER

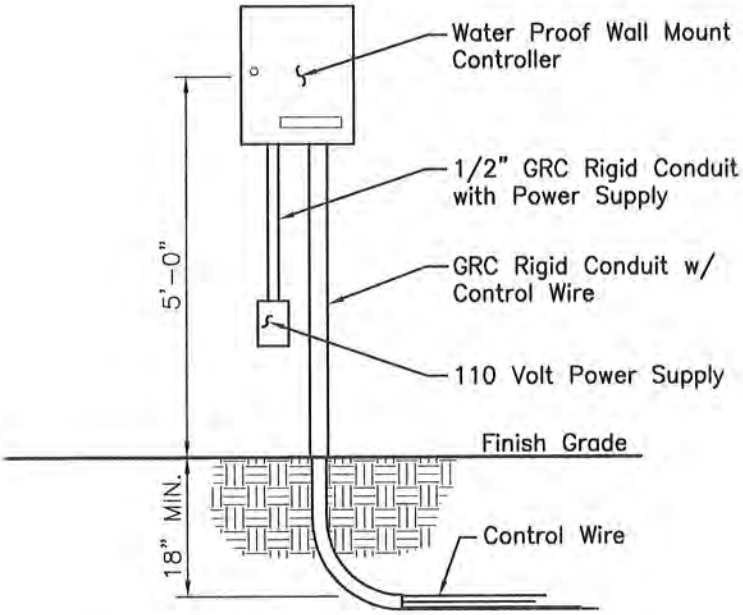

WALL-MOUNTED CONTROLLER

REVISION			
Add conduit fill; change PVC to GRC rigid conduit	CITY OF WOODLAND COMMUNITY DEVELOPMENT DEPARTMENT ENGINEERING DIVISION APPROVED BY DATE 03/23/10 BRENT MEYER, CITY ENGINEER	Pedestal Mount and Wall Mount Controllers	1340

SCALE : n.t.s.	FILE NAME	spec1345.dwg

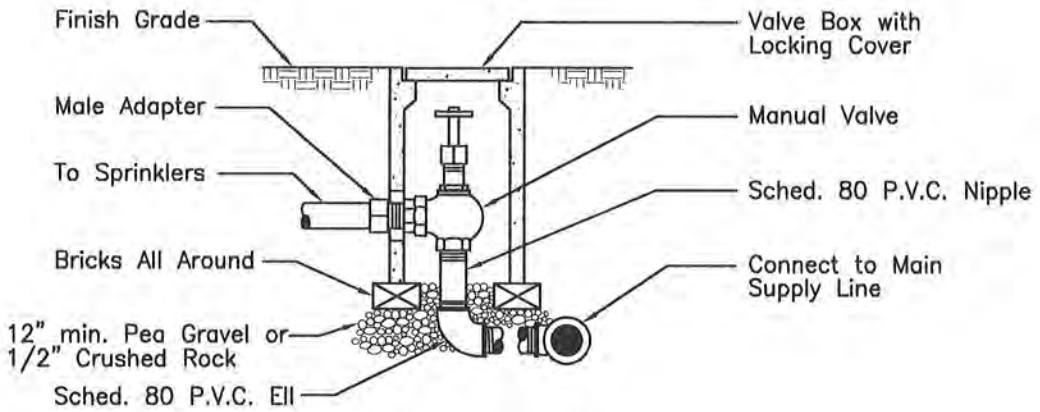

MANUAL VALVE

NOTES:

1. This detail for use at Sports Fields ONLY.
2. All valves shall be located within planting areas whenever possible.
3. Use 10" x 10-1/4" round box for all ball valves, Carson Industries # 910-12B with green bolt down cover of approved equal. Extension sleeve shall be PVC -- 6-inch minimum size.
4. When installed within paved areas subject to auto traffic, all valve boxes & lids shall be traffic rated for H-20 load rating, Christy G5 or approved equal.
5. All Nipples and Joints to be Schedule 80 PVC.

REVISION			
Revised Title & notes for Sports Fields only	CITY OF WOODLAND COMMUNITY DEVELOPMENT DEPARTMENT ENGINEERING DIVISION APPROVED BY DATE 03/23/10 BRENT MEYER, CITY ENGINEER	Manual Valve Installation	1345

SCALE : n.t.s.	FILE NAME	spec1347.dwg

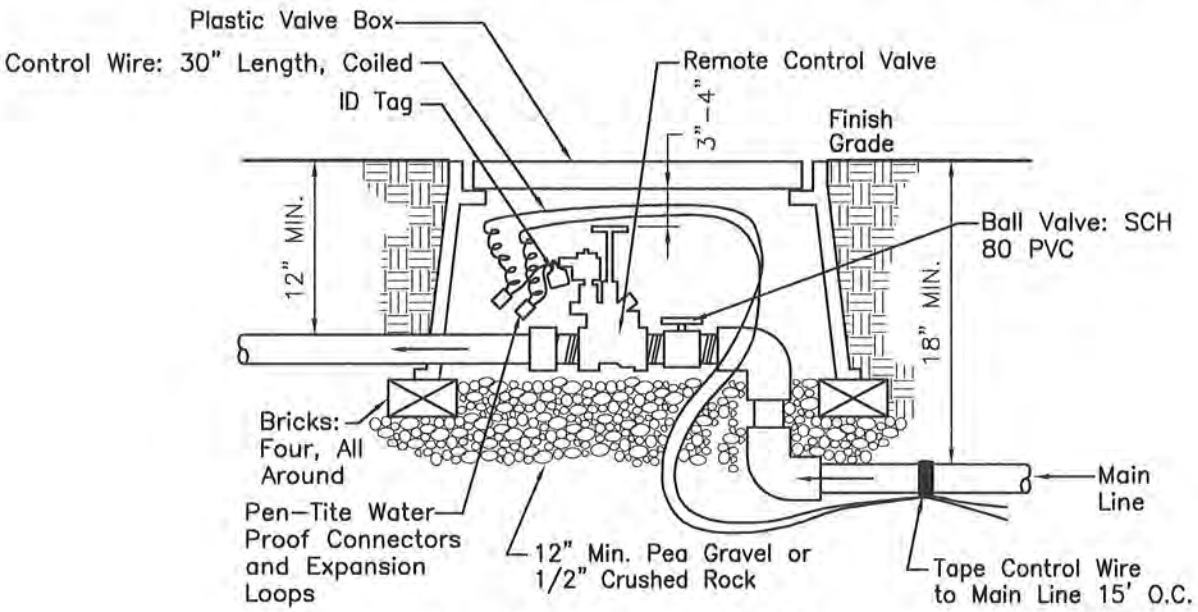

REMOTE CONTROL VALVE

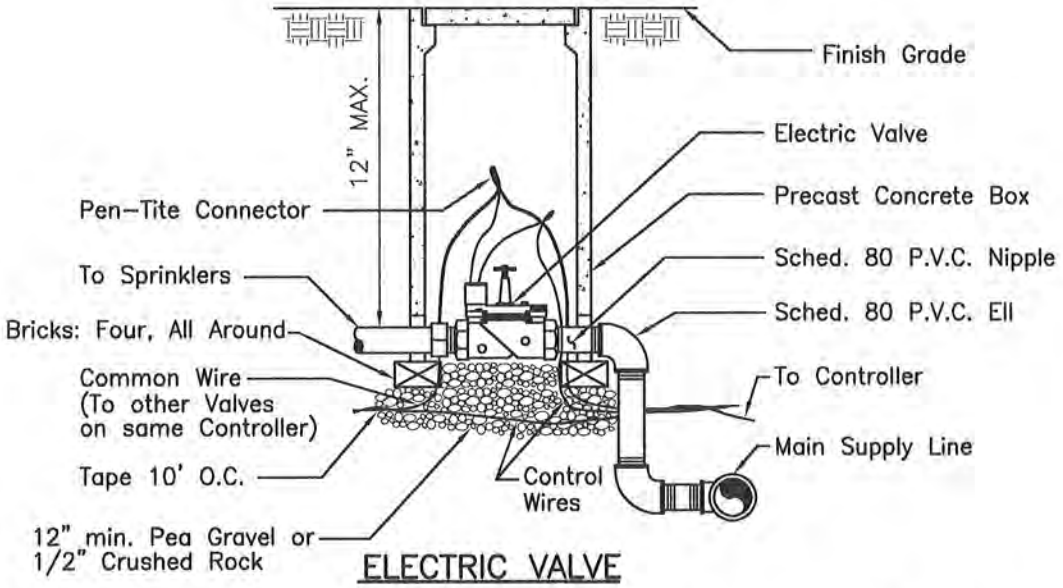

ELECTRIC VALVE

Notes:

1. Use 9-1/2" x 16" x 11" rectangular box for all electrical control valves, Carson Industries 1419-12B with green bolt down cover or approved equal.
2. Heat brand valve number and arrow indicating direction of flow on valve box lid.
3. When installed within paved areas subject to auto traffic, all valve boxes & lids shall be traffic rated for H-20 load rating, Christy G5 or approved equal.
4. All nipples and joints to be schedule 80 PVC.

REVISION	CITY OF WOODLAND COMMUNITY DEVELOPMENT DEPARTMENT ENGINEERING DIVISION	Remote Control Valves	1347
Add Note 2, revise Note 3	APPROVED BY DATE 03/23/10 BRENT MEYER, CITY ENGINEER		

SCALE : n.t.s.	FILE NAME	spec1350.dwg

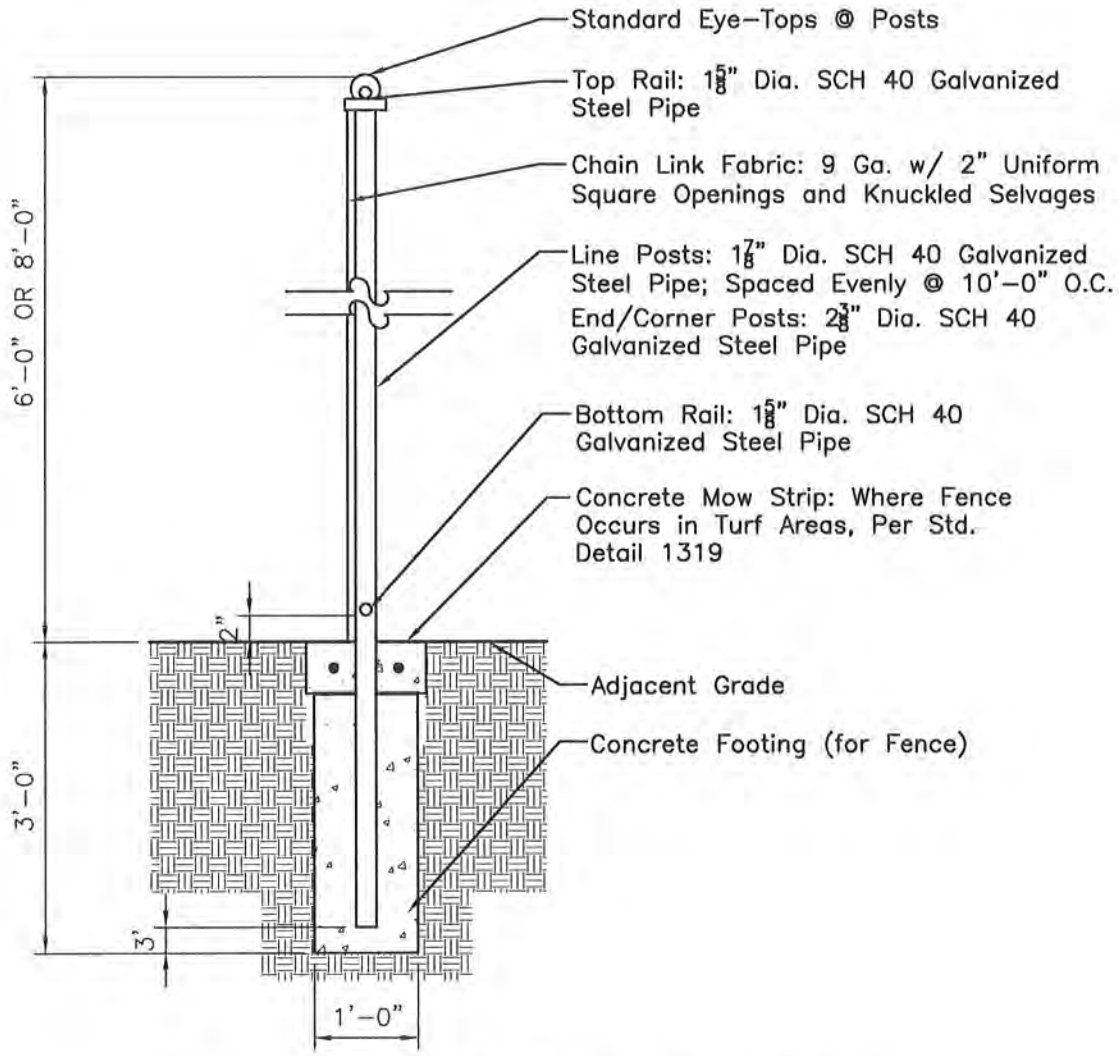

NOTE: Secure Fabric to Posts w/ 9 Gauge Aluminum Ties @ 1'-2" O.C. and to Rails @ 2'-0" O.C.

REVISION	CITY OF WOODLAND COMMUNITY DEVELOPMENT DEPARTMENT ENGINEERING DIVISION	Chain Link Fence Up to 8' Height	1350
New Detail	APPROVED BY DATE 03/23/10 BRENT MEYER, CITY ENGINEER		

SCALE : n.t.s.	FILE NAME	spec1352.dwg

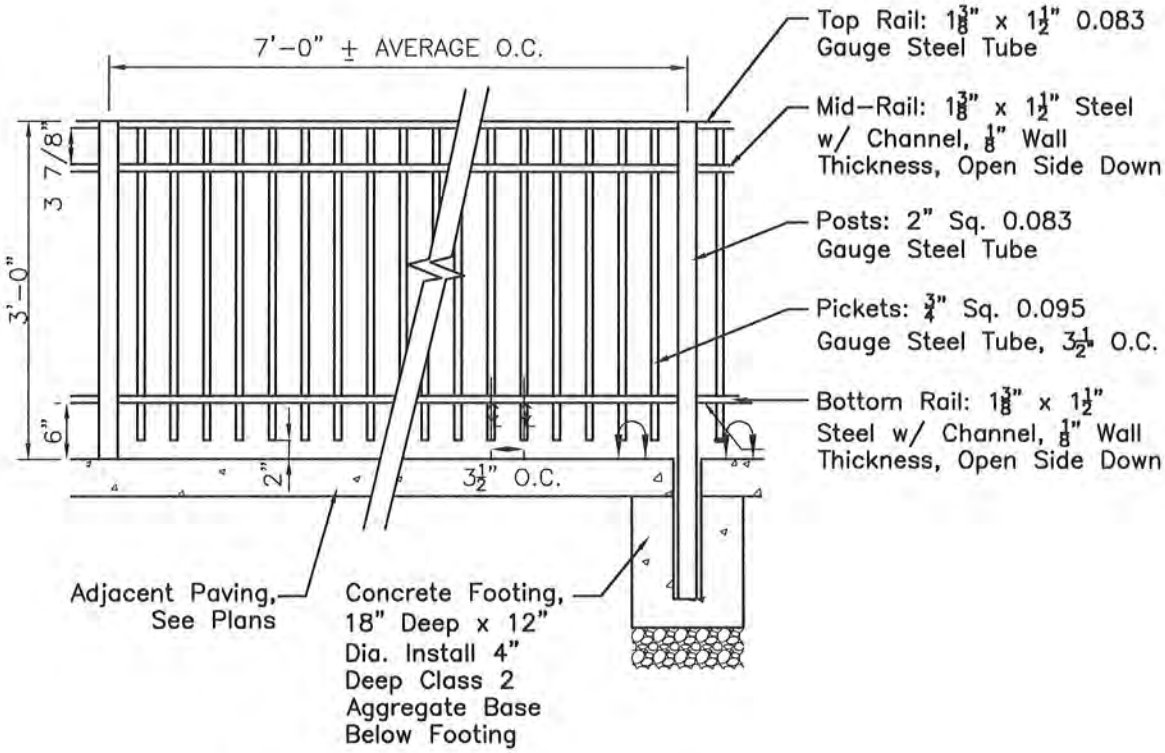

NOTE:

1. Contractor to Submit Shop Drawings.
2. All Fence Components to be Hot Dipped Galvanized After Fabrication and Prior to Painting.
3. Paint with (2) Coats Primer and (2) Coats Epoxy Paint. Color to be Approved by Engineer.
4. All Connections to be Welded.

REVISION	CITY OF WOODLAND COMMUNITY DEVELOPMENT DEPARTMENT ENGINEERING DIVISION	Ornamental Steel Fence	1352
New Detail	APPROVED BY DATE 03/23/10 BRENT MEYER, CITY ENGINEER		

SCALE : n.t.s.	FILE NAME	spec1354.dwg

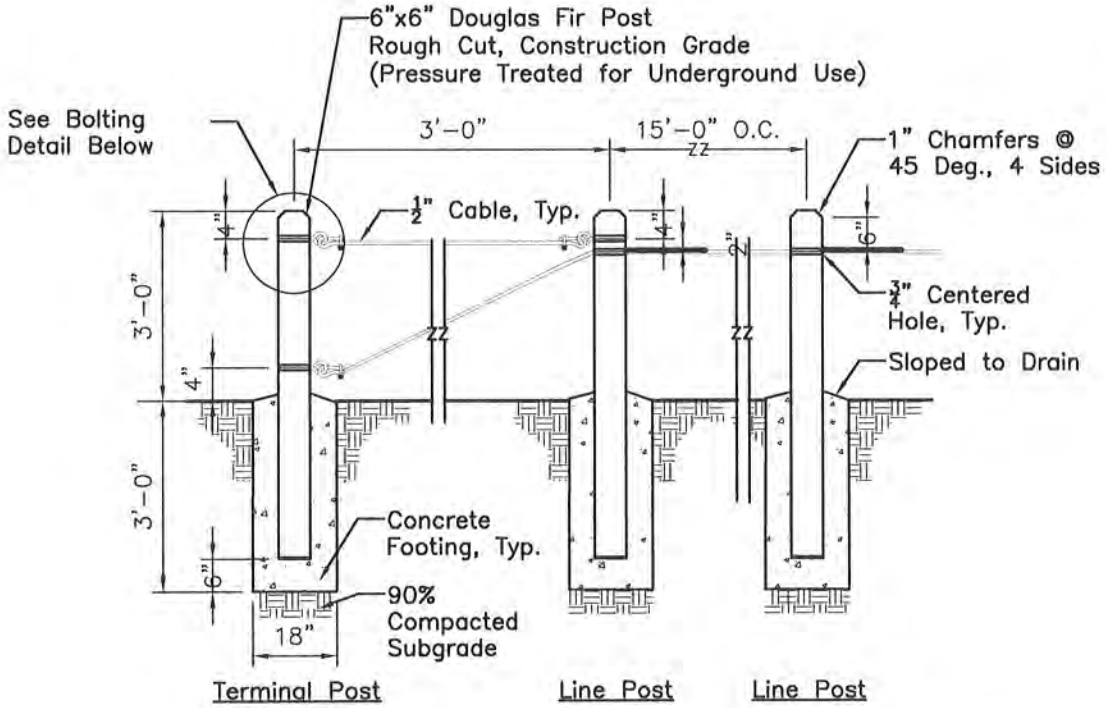

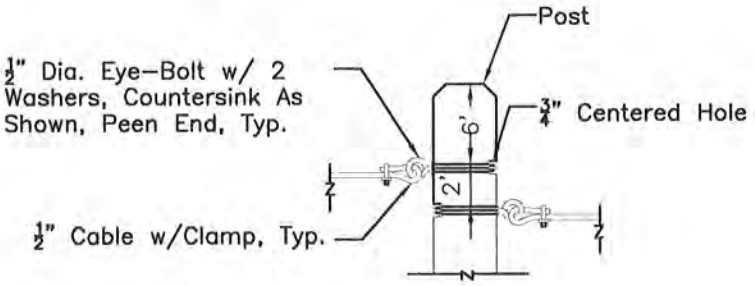

Notes:

1. Provide Concrete Footing at All Posts.
2. Use ⅜"x2" Galvanized Wire Rope Clips for Connection and Splices. All Clips Shall be Placed with Nuts Facing Downward.

REVISION	CITY OF WOODLAND COMMUNITY DEVELOPMENT DEPARTMENT ENGINEERING DIVISION	Post and Cable Fence	1354
New Detail	APPROVED BY DATE 03/23/10 BRENT MEYER, CITY ENGINEER		

SCALE : n.t.s.	FILE NAME	spec1358.dwg

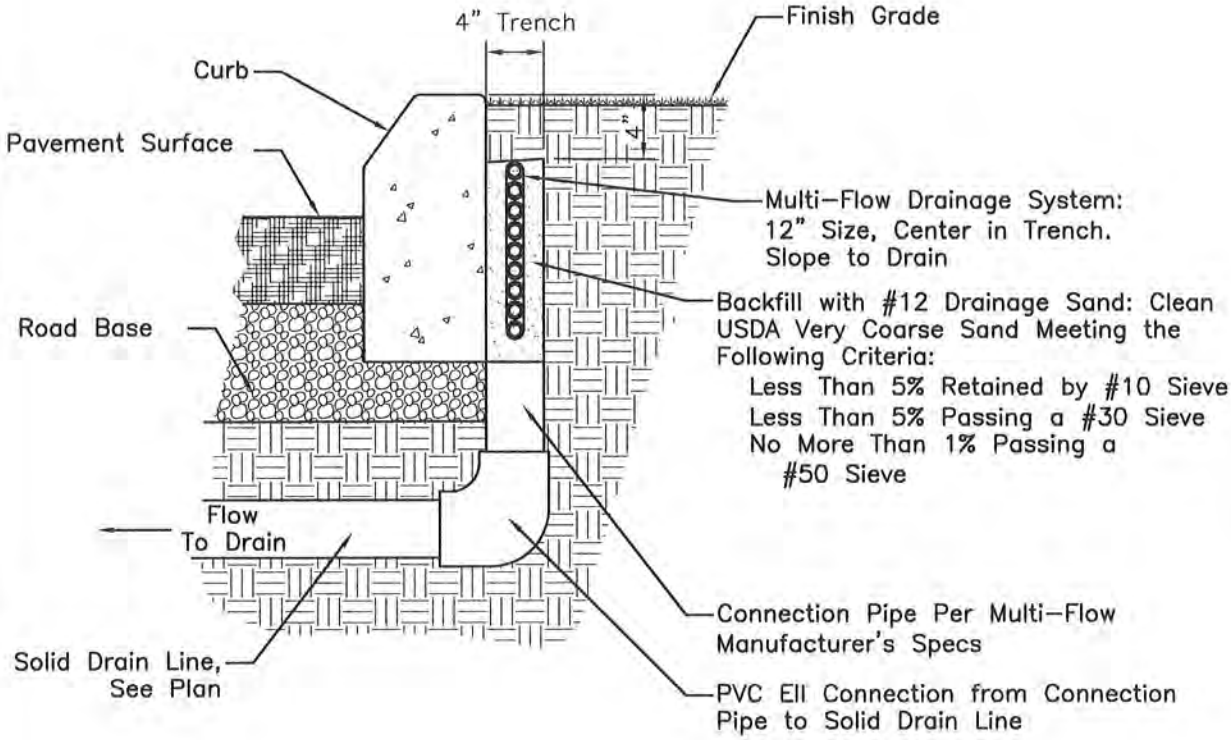

REVISION			
New Detail	CITY OF WOODLAND COMMUNITY DEVELOPMENT DEPARTMENT ENGINEERING DIVISION APPROVED BY DATE 03/23/10 BRENT MEYER, CITY ENGINEER	Back of Curb Sub–Drain	1358

SCALE : n.t.s.	FILE NAME	spec1360.dwg

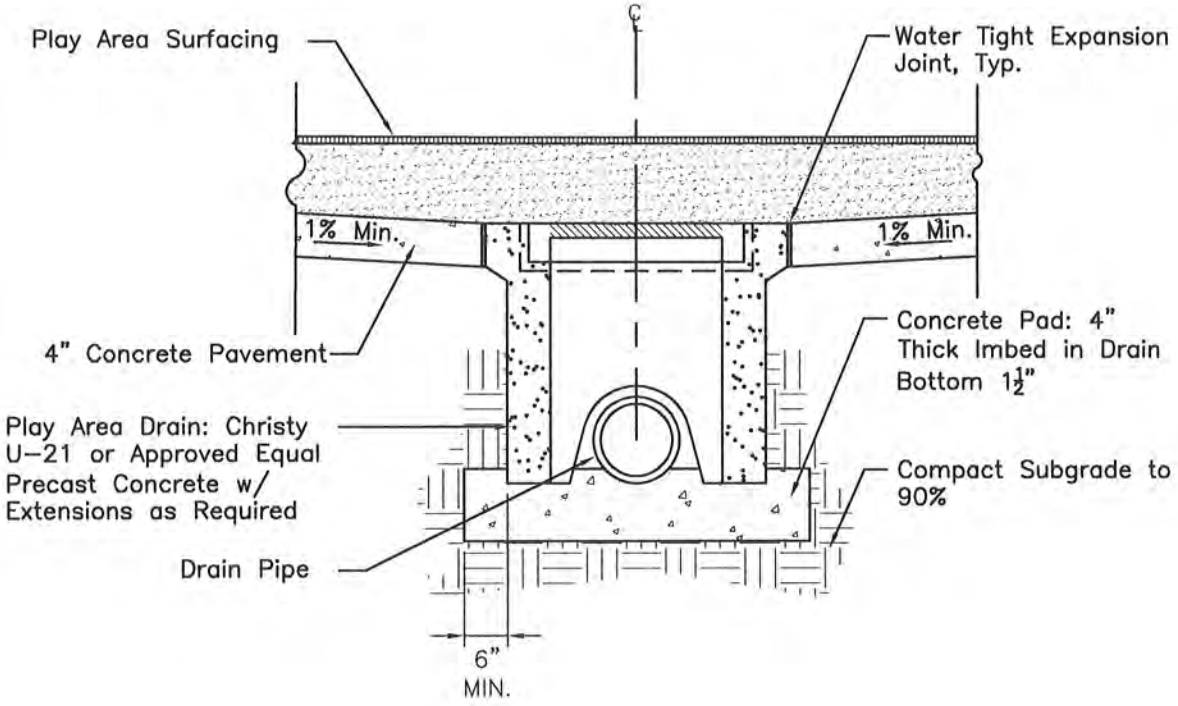

REVISION	CITY OF WOODLAND COMMUNITY DEVELOPMENT DEPARTMENT ENGINEERING DIVISION	Drain at Play Area Surfacing	1360
New Detail	APPROVED BY DATE 03/23/10 BRENT MEYER, CITY ENGINEER		

SCALE : n.t.s.	FILE NAME	spec1362.dwg

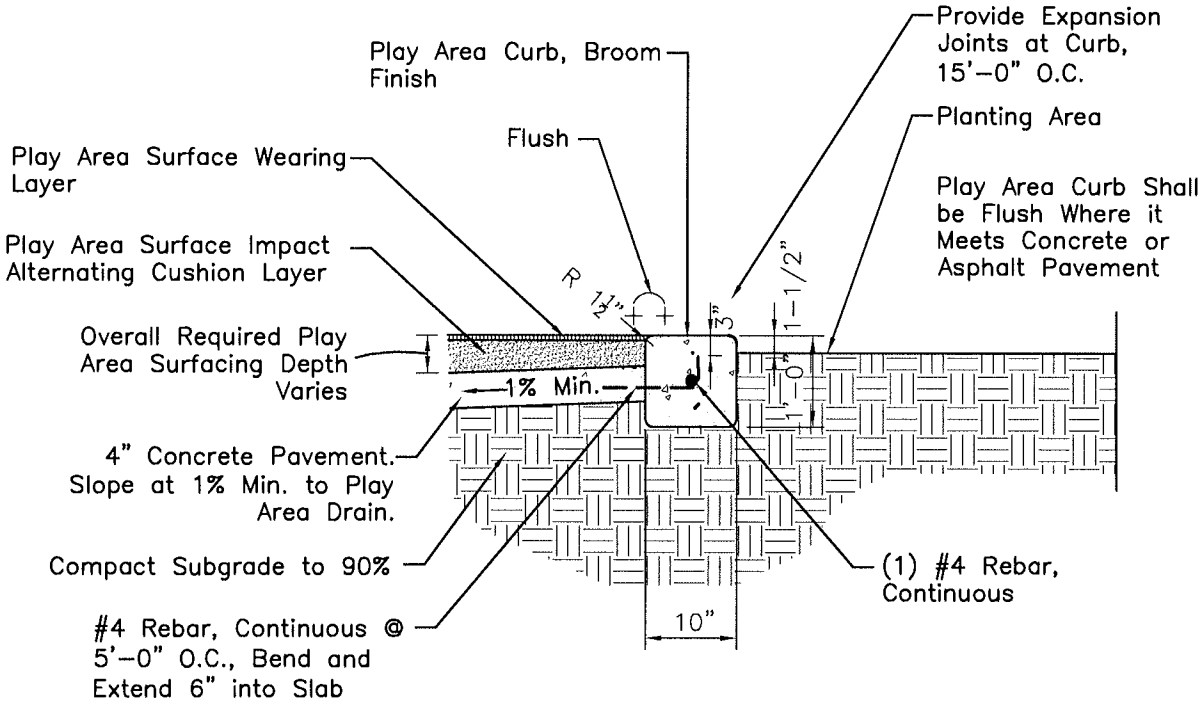

REVISION			
New Detail	CITY OF WOODLAND COMMUNITY DEVELOPMENT DEPARTMENT ENGINEERING DIVISION APPROVED BY DATE 03/23/10 BRENT MEYER, CITY ENGINEER	Play Area Surfacing and Curb	1362

SCALE : n.t.s.	FILE NAME	spec1365.dwg

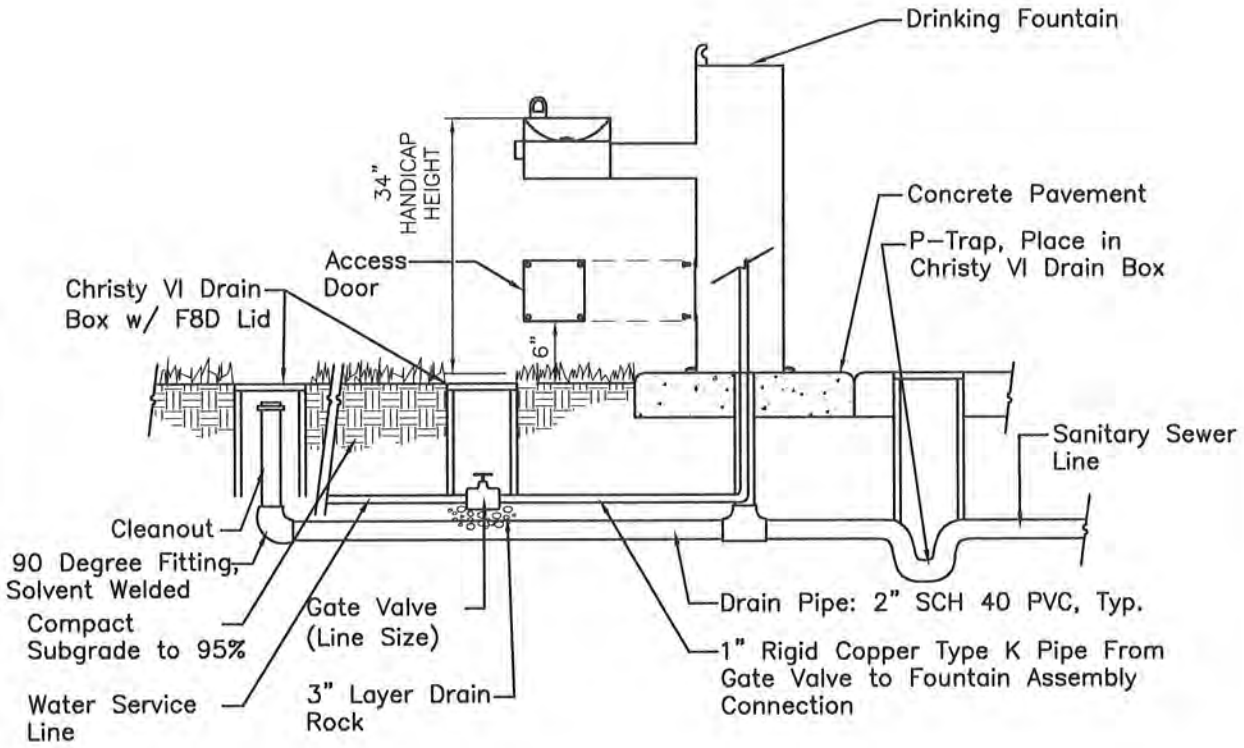

NOTES:
Provide 6" Clear from Back Edge of Fountain to Back Edge of Concrete Pad.

REVISION			
New Detail	CITY OF WOODLAND COMMUNITY DEVELOPMENT DEPARTMENT ENGINEERING DIVISION APPROVED BY DATE 03/23/10 BRENT MEYER, CITY ENGINEER	Drinking Fountain	1365

{Blank Page}

SCALE : n.t.s.	FILE NAME	spec1410.dwg

NOTES

1. The sign installation shall use the Unistrut Telespar® Sign Support System with a 2", 12–gauge breakaway post, fitted Heavy Duty One–Piece Anchor and drive rivet fasteners or approved equivalent system.

2. The post shall be secured to the anchor on two sides: 1–facing oncoming traffic, 1–facing the roadway.

3. For use in areas with speed limits of 35 mph or greater, in high knock down risk locations and on all median islands.

4. For concrete specifications see Section 5 of the Materials and Construction Methods of these Standard Specifications.

5. Heavy duty anchor should have only one (1) hole at the top on all four sides.

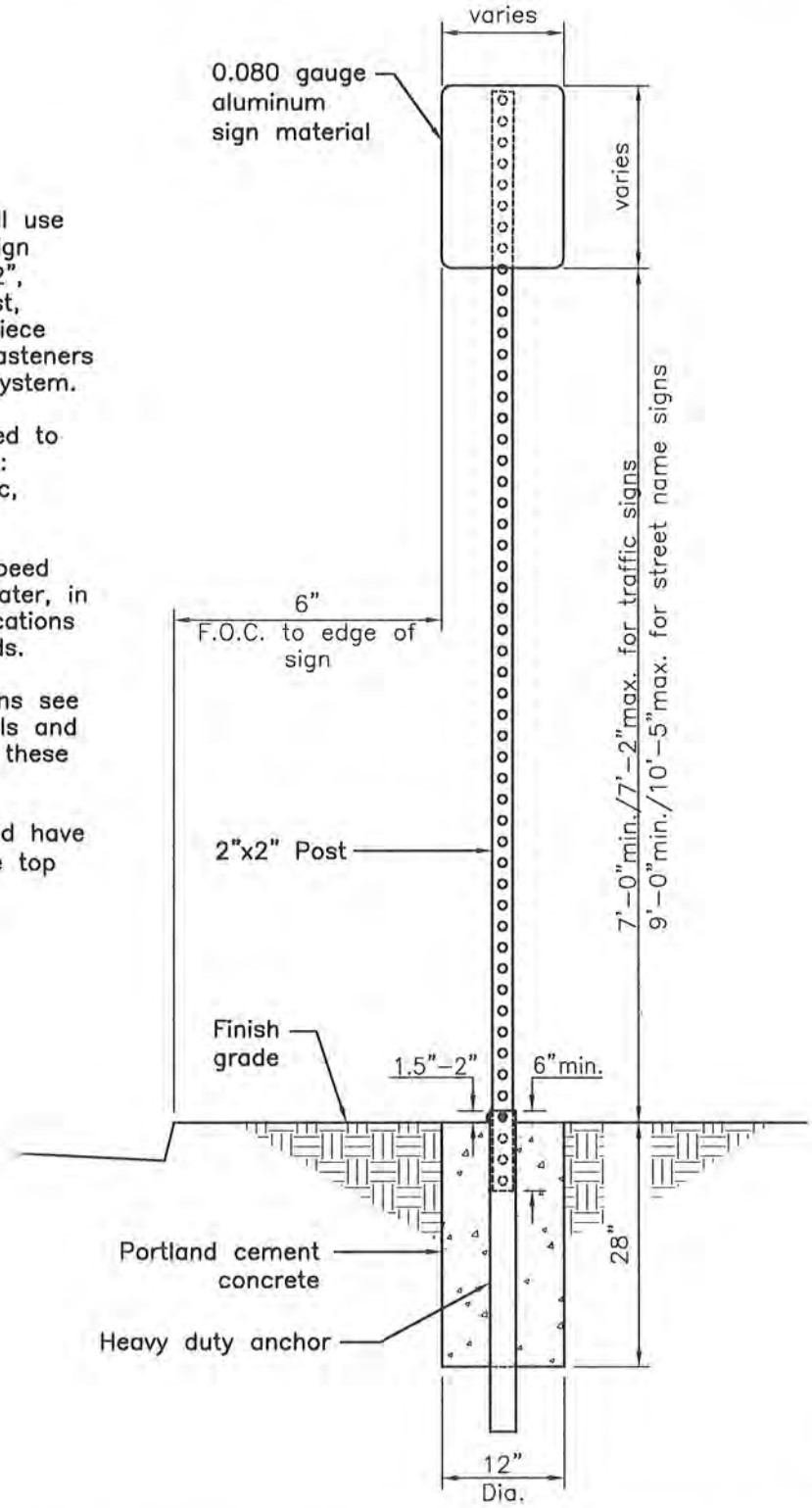

REVISION			
Revise Title, add note 5	CITY OF WOODLAND COMMUNITY DEVELOPMENT DEPARTMENT ENGINEERING DIVISION APPROVED BY DATE 03/23/10 BRENT MEYER, CITY ENGINEER	Break–away Sign Installation w/2x2 Pole and Anchor Assembly	1410

SCALE : n.t.s.	FILE NAME	spec1412.dwg

NOTES

1. Center Mounted Signs: Shall be mounted with Band-it brand brackets (#D001) using 0.030 thickness 5/8" Band-it banding tape (#C205). Band-it brand 5/8" buckles (#C255) shall be used to secure banding tape.

2. Flag Mounted Signs: Signs that are 18" x 18" or smaller, two Band-it L-mount brackets (#D007) shall be used per strap. For flag-mounted signs larger than 18" x 18" brackets shall be approved by the City Engineer prior to use.

3. Edge of sign to be 6" from F.O.C. when placed in sidewalk area or flush with B.E.W when behind sidewalk.

4. For concrete specifications see Section 5 of the Materials and Construction Methods of these Standard Specifications.

5. Placement in concrete areas should be avoided. When signs must be placed in concrete they shall be anchored using the Round Post Break-Out™ Coupler manufactured by Sign Support Systems using the heavy duty anchor as detailed in Standard 1410 or other equal approved system.

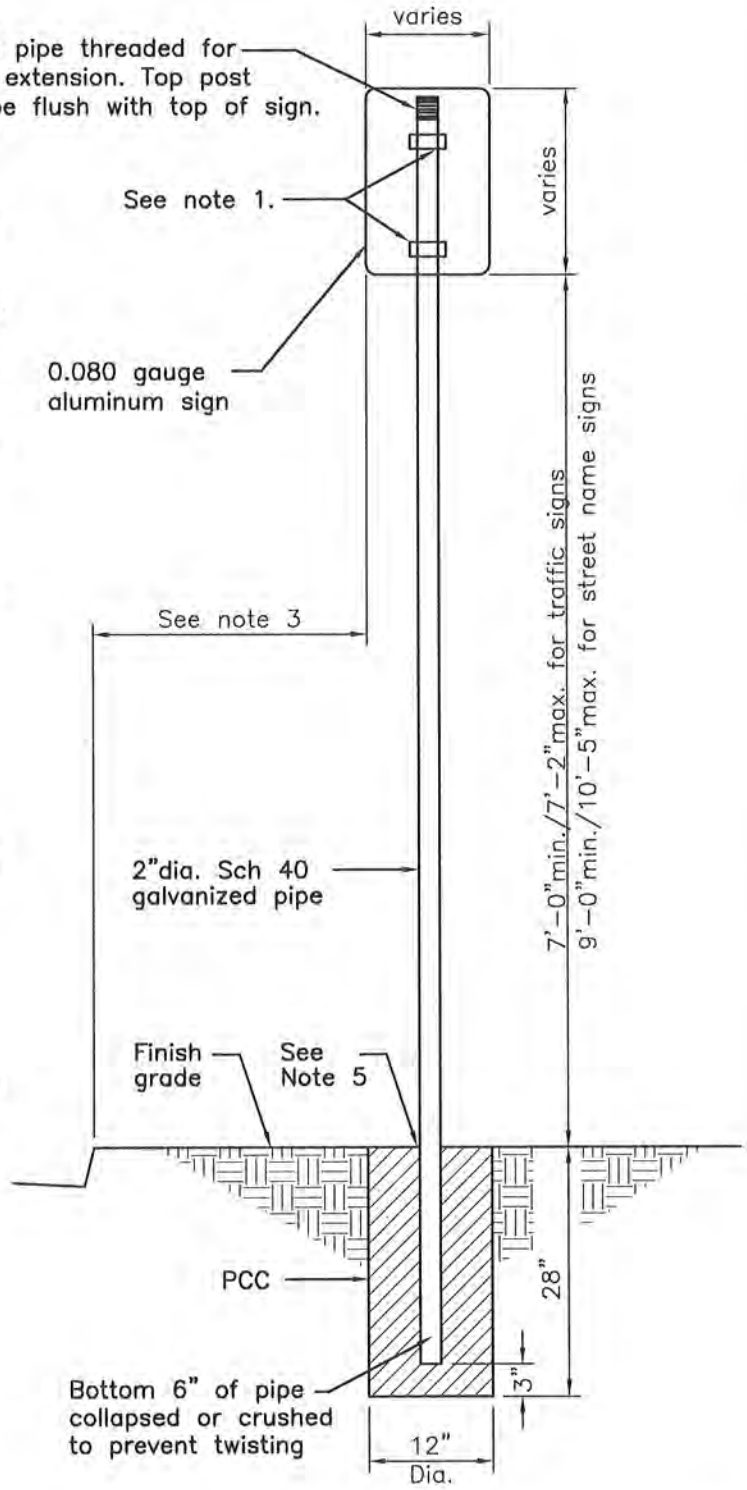

REVISION	CITY OF WOODLAND COMMUNITY DEVELOPMENT DEPARTMENT ENGINEERING DIVISION	Sign Installation 2" Galvanized Pole	1412
Revised notes	APPROVED BY DATE 03/23/10 BRENT MEYER, CITY ENGINEER		

SCALE : n.t.s.	FILE NAME	spec1420.dwg

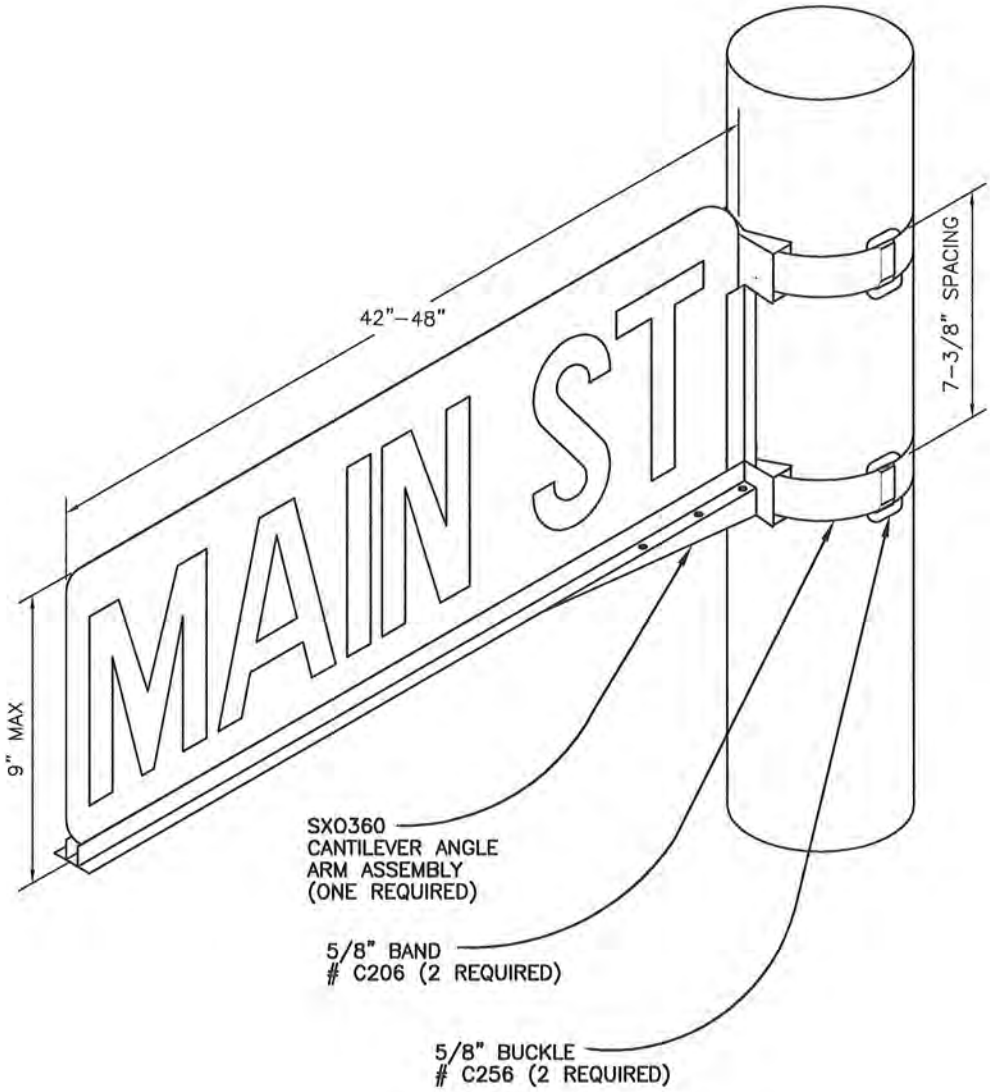

BAND-IT-IDEX

NOTES

1. For signs 36" and under use 10X10 bracket.

REVISION			
Revised band sizes, added note	CITY OF WOODLAND COMMUNITY DEVELOPMENT DEPARTMENT ENGINEERING DIVISION APPROVED BY DATE 03/23/10 BRENT MEYER, CITY ENGINEER	Cantilever Angle Arm Street Sign Mount	1420

SCALE : n.t.s.	FILE NAME	spec1425.dwg

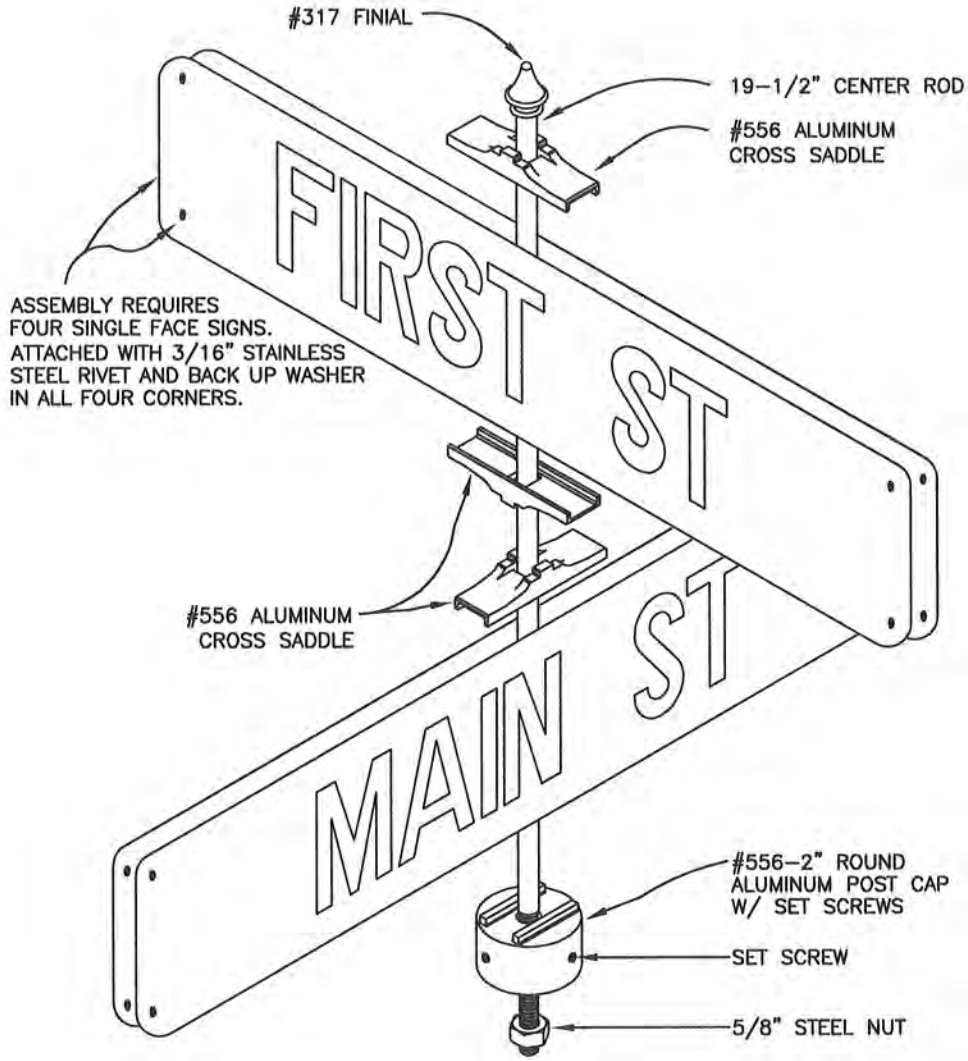

WESTERN HIGHWAY PRODUCTS
STYLE #556
4-WAY BRACKET ASSEMBLY

REVISION			
Change manufacturer	*CITY OF WOODLAND* COMMUNITY DEVELOPMENT DEPARTMENT ENGINEERING DIVISION APPROVED BY DATE 03/23/10 BRENT MEYER, CITY ENGINEER	Street Name Sign	1425

SCALE : N.T.S.	FILE NAME	SPEC1430.DWG

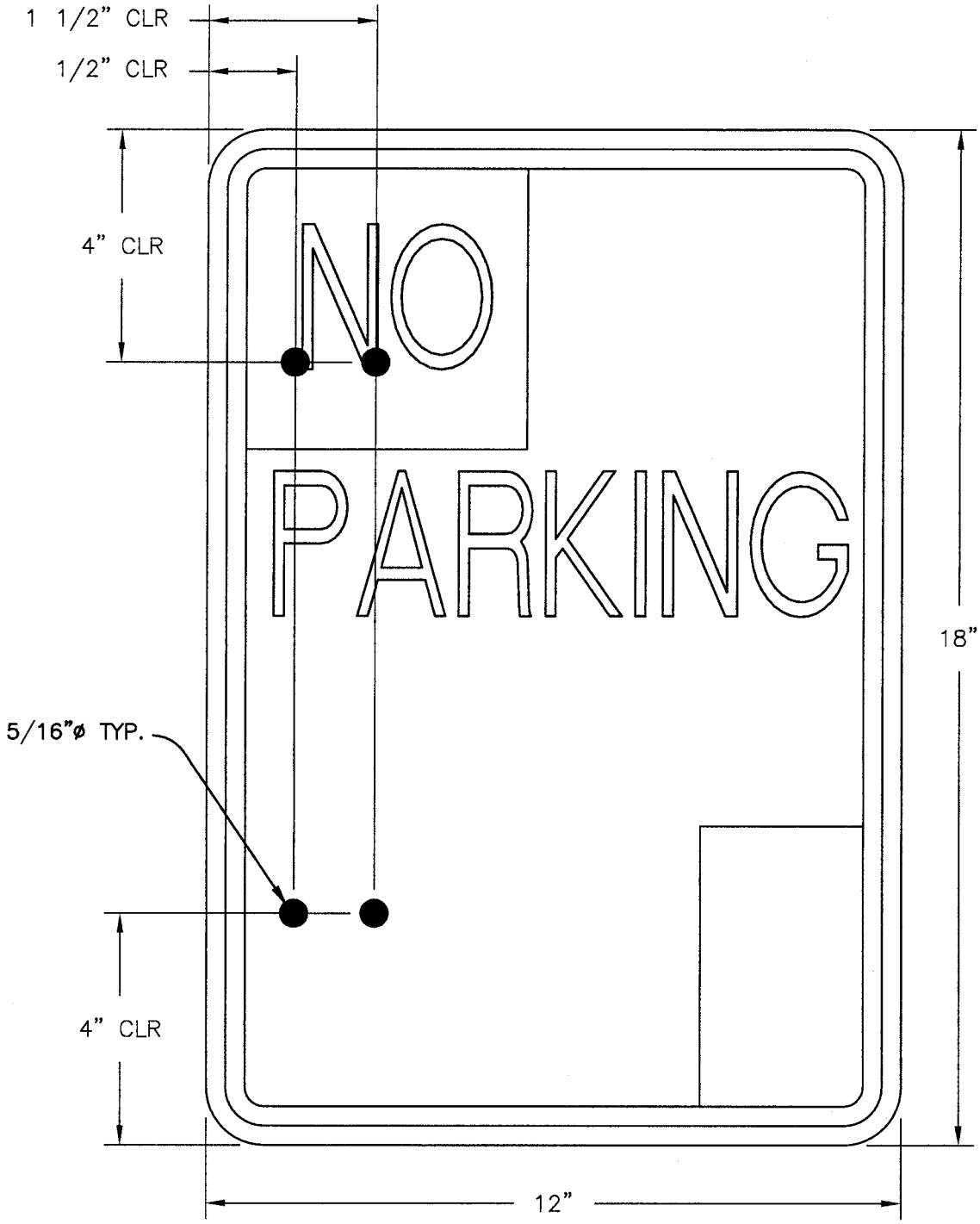

NOTE: MOUNTING BRACKETS
BAND-IT # D007
BAND-TI # 380

BAND-IT-IDEX

NO.	REVISION	BY

CITY OF WOODLAND
PUBLIC WORKS DEPARTMENT
ENGINEERING DIVISION

APPROVED BY
DATE 11/05/07 DICK DONNELLY, CITY ENGINEER

NO PARKING
SIGN MOUNTING

1430

SCALE : n.t.s.	FILE NAME	spec1435-1437.dwg

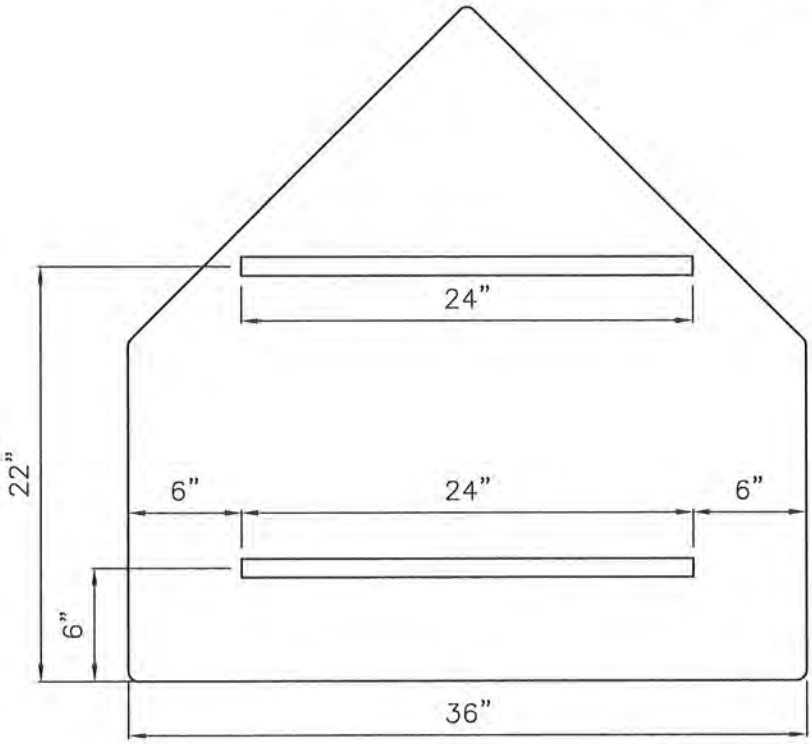

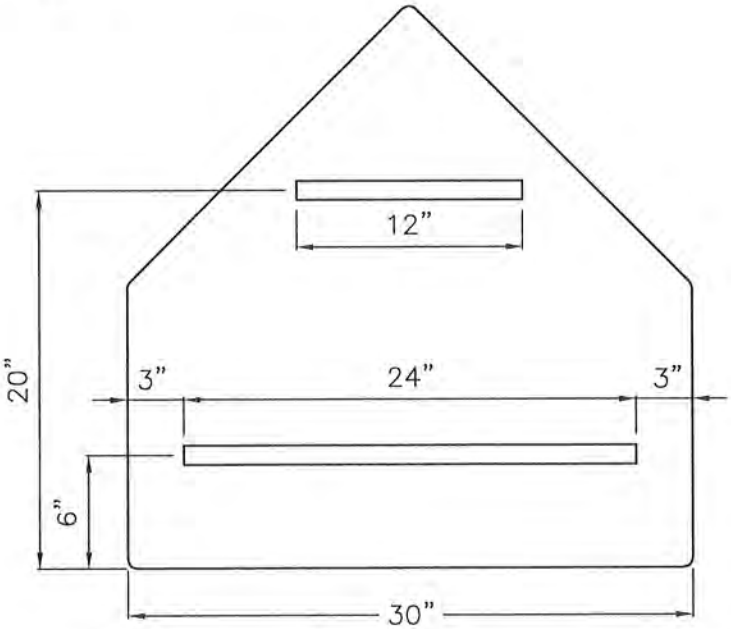

NOTES:

1. Bracing shall be used on all signs 30" or larger and shall be SignFix 1" medium aluminum extrusion. Apply to sign with 1" wide 3M VHB double-sided tape.

2. Signs, extrusions and tape to be installed per MCM Section 14.02 F. & G.

REVISION			
New Detail	CITY OF WOODLAND COMMUNITY DEVELOPMENT DEPARTMENT ENGINEERING DIVISION APPROVED BY DATE 03/23/10 BRENT MEYER, CITY ENGINEER	Aluminum Extrusion Mounting for School Signs	1435

SCALE : n.t.s.	FILE NAME	spec1435-1437.dwg

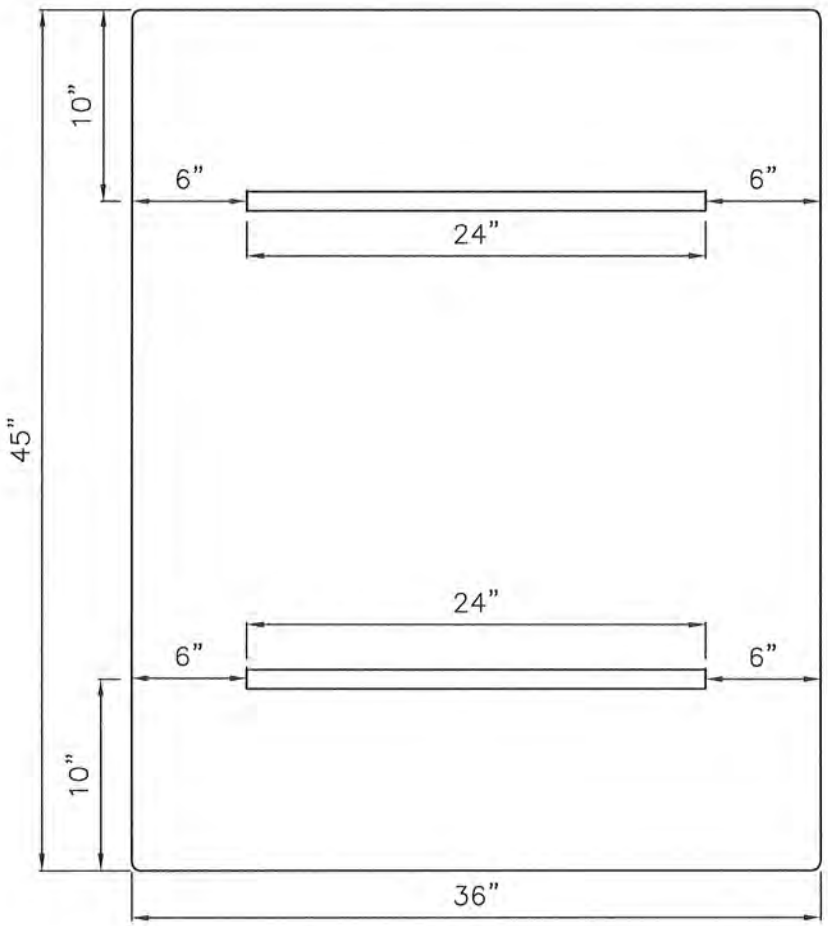

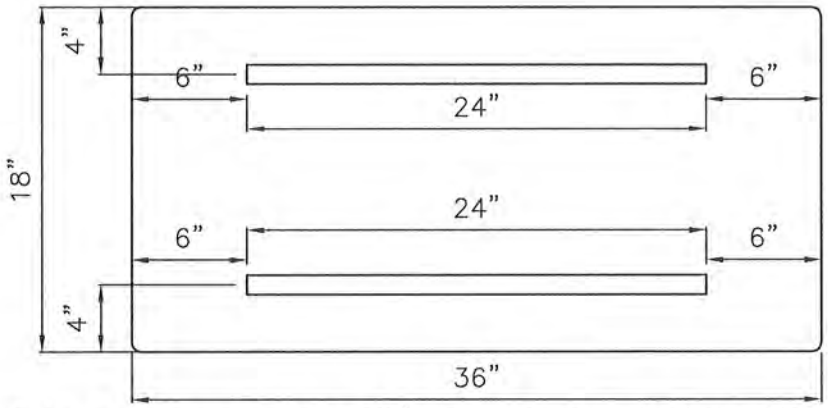

NOTES:

1. Bracing shall be used on all signs 30" or larger and shall be SignFix 1" medium aluminum extrusion. Apply to sign with 1" wide 3M VHB double-sided tape.
2. Signs, extrusions and tape to be installed per MCM Section 14.02 F. & G.
3. Extrusion <u>not</u> required on R1-1 (STOP) sign.

REVISION			
New Detail	CITY OF WOODLAND COMMUNITY DEVELOPMENT DEPARTMENT ENGINEERING DIVISION APPROVED BY DATE 03/23/10 BRENT MEYER, CITY ENGINEER	Aluminum Extrusion Mounting for Regulatory Signs	1436

SCALE : n.t.s.	FILE NAME	spec1435–1437.dwg

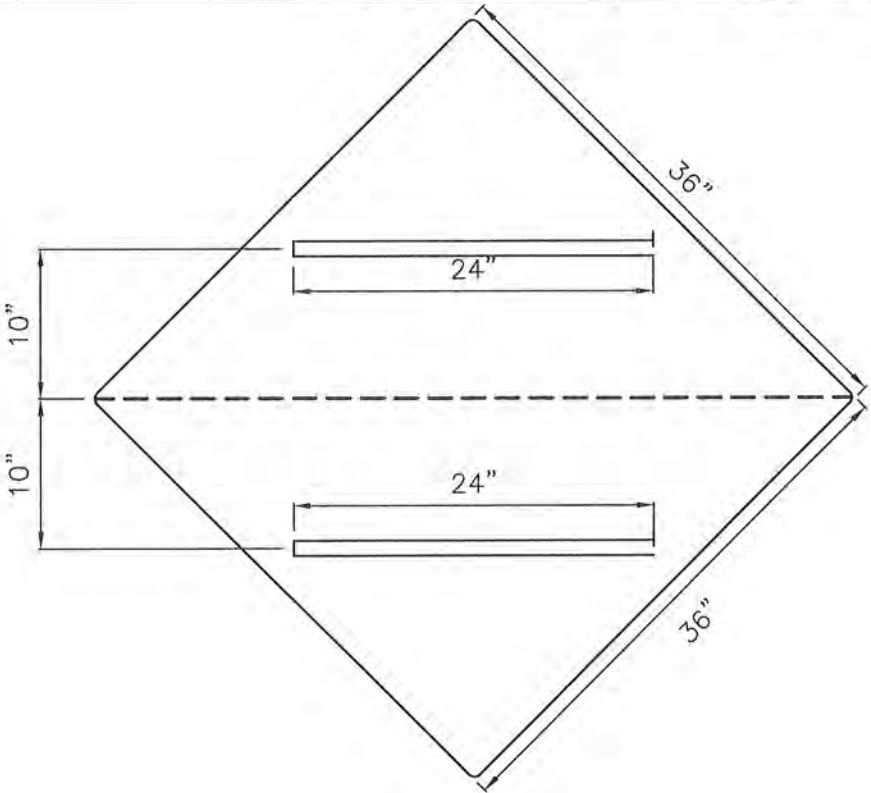

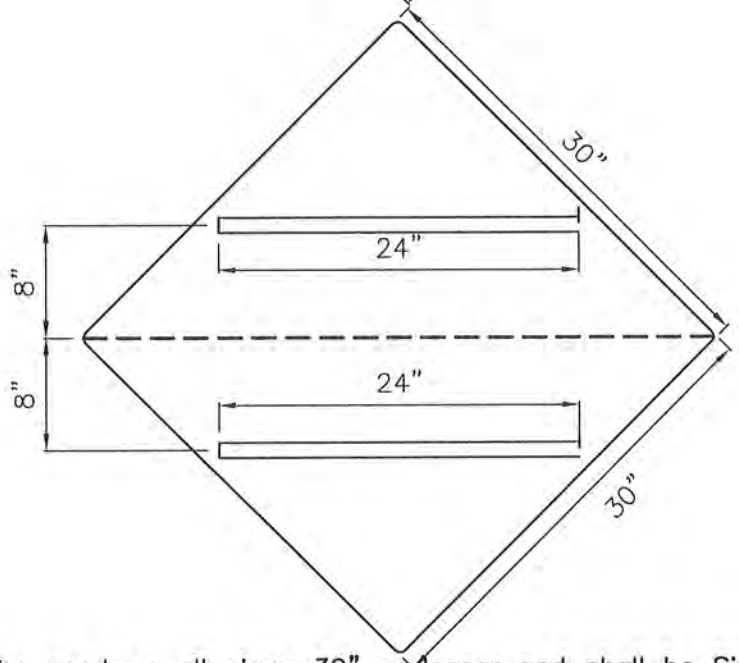

NOTES:

1. Bracing shall be used on all signs 30" or larger and shall be SignFix 1" medium aluminum extrusion. Apply to sign with 1" wide 3M VHB double–sided tape.
2. Signs, extrusions and tape to be installed per MCM Section 14.02 F. & G.
3. Extrusion <u>not</u> required on W10–1 (RR Crossing) sign.

REVISION			
New Detail	CITY OF WOODLAND COMMUNITY DEVELOPMENT DEPARTMENT ENGINEERING DIVISION APPROVED BY DATE 03/23/10 BRENT MEYER, CITY ENGINEER	Aluminum Extrusion Mounting for Warning Signs	1437

SCALE : n.t.s.	FILE NAME	spec1438.dwg

HAWKINS M10J–OCB250AL(S)
OR M10J–OCB250FL(S)
INSTALLED PER SECTION 14.04
OF THE CITY OF WOODLAND
STANDARD SPECIFICATIONS AND THE
MANUFACTURERS RECOMMENDATIONS

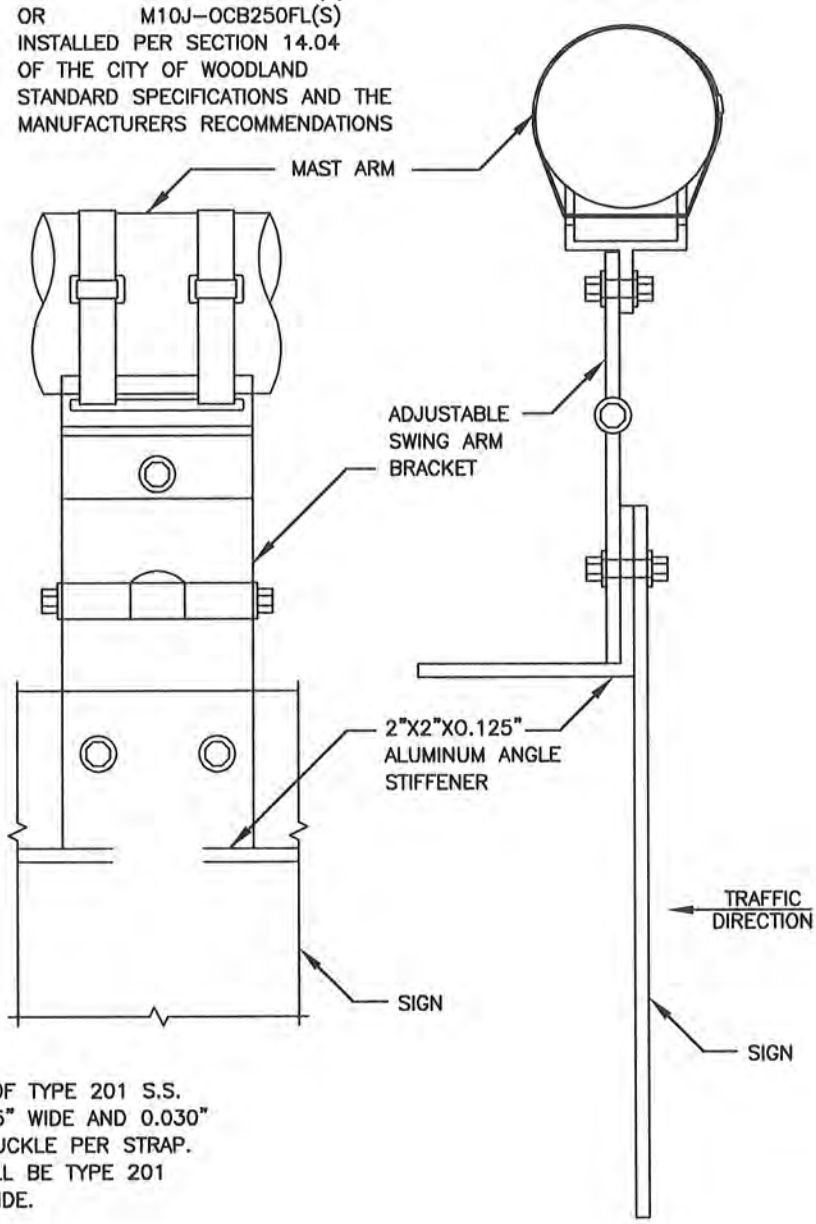

TWO STRAPS OF TYPE 201 S.S.
BANDING 0.625" WIDE AND 0.030"
THICK. ONE BUCKLE PER STRAP.
BUCKLES SHALL BE TYPE 201
S.S. 0.625" WIDE.

REVISION			
New Detail	CITY OF WOODLAND COMMUNITY DEVELOPMENT DEPARTMENT ENGINEERING DIVISION APPROVED BY DATE 03/23/10 BRENT MEYER, CITY ENGINEER	Mast Arm Mounted Street Name Sign	1438

SCALE : n.t.s.	FILE NAME	spec1440.dwg

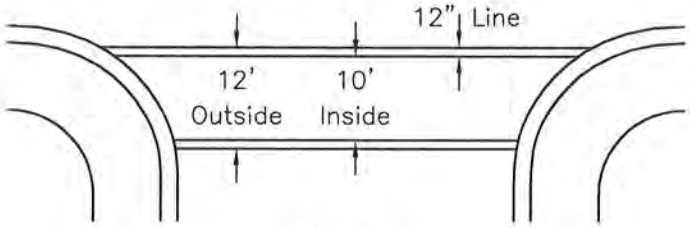

LAYOUT

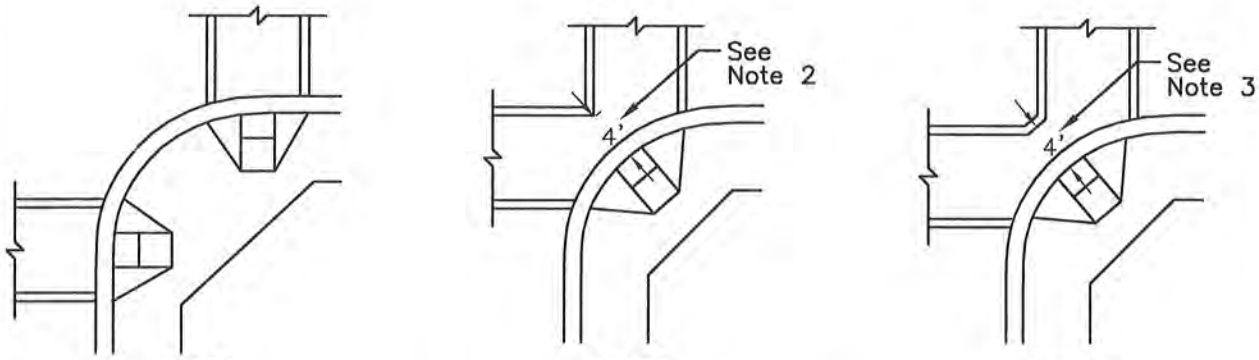

CASE 1 CASE 2 CASE 3

WHITE (STANDARD) CROSSWALK

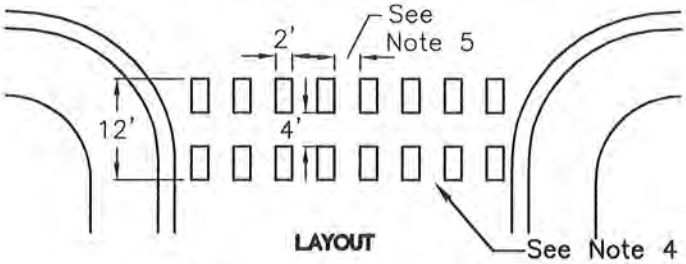

LAYOUT

See Note 4

NOTES:

1. Markings are not to be placed on concrete gutter pan.
2. Where 4' cannot be met, use Case 3.
3. 4' minimum clear distance from flow line to inside stripe.
4. Markings must be placed to avoid the wheel paths.
5. Spacing may vary 24–36".
6. When 4' is not met, contact City Inspector.
7. In all cases crosswalk should be centered on ramp.

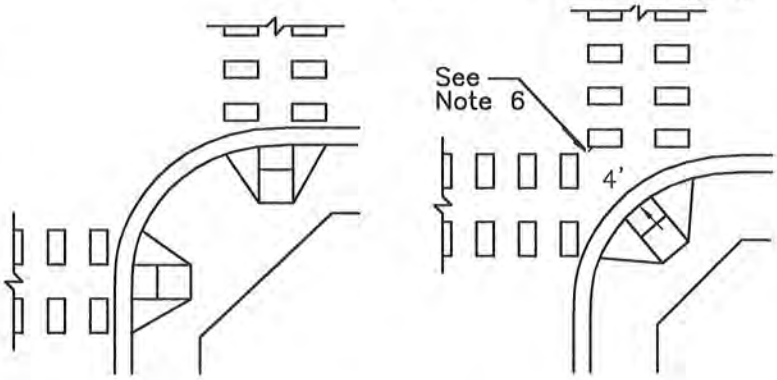

CASE 1 CASE 2

YELLOW (SCHOOL) CROSSWALK

REVISION			
New Detail	CITY OF WOODLAND COMMUNITY DEVELOPMENT DEPARTMENT ENGINEERING DIVISION APPROVED BY DATE 03/23/10 BRENT MEYER, CITY ENGINEER	Crosswalk Striping	1440

SCALE : n.t.s.	FILE NAME	spec1445.dwg

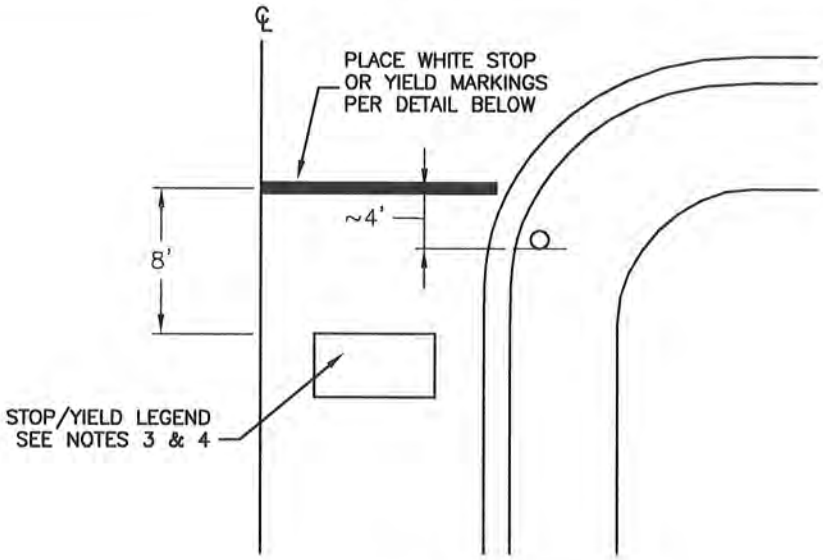

LAYOUT

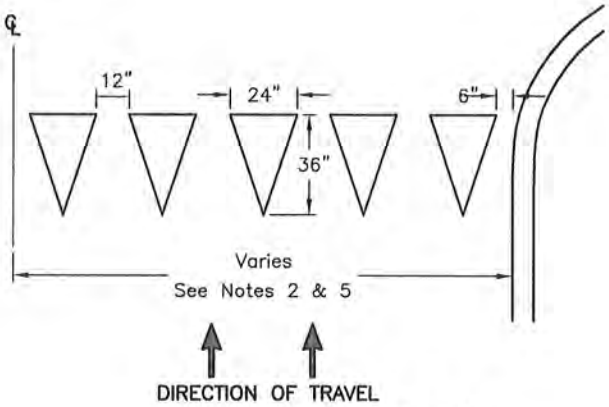

YIELD MARKING DETAIL

NOTES:

1. Markings are not to be placed on concrete gutter pan.
2. Markings must be placed to avoid the wheel paths.
3. Stop or Yield legends shall be per Caltrans Standard A24D and shall be centered in the lane.
4. Legends shall be placed at all intersections except where a local street intersects with another local street.
5. Markings extend the entire width of the lane.

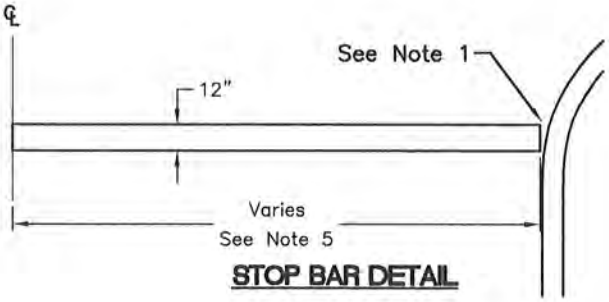

STOP BAR DETAIL

REVISION			
New Detail	CITY OF WOODLAND COMMUNITY DEVELOPMENT DEPARTMENT ENGINEERING DIVISION APPROVED BY DATE 03/23/10 BRENT MEYER, CITY ENGINEER	Stop and Yield Striping Details	1445

{Blank Page}

PART 3. CONSTRUCTION SPECIFICATIONS

{Blank Page}

SECTION 1: GENERAL CONSTRUCTION REQUIREMENTS

1.01 PUBLIC NOTIFICATION

The Contractor shall provide a notification to the property owners and occupants of the properties on the streets adjacent to the project site. The limits of notification may be expanded as directed by the City. The notification shall provide the following information on the Contractor's or Project Owner's letterhead:

- Name of project owner including representative and contact information.
- General description of the work, including duration of significant aspects, noting any impacts to traffic.
- Name of contractor(s) including onsite superintendent and office personnel with contact information.
- Name of city staff engineer and inspector, including contact information.
- Other information as required by the city.

1.02 CONSTRUCTION STAKING

A. Line: Line stakes shall be at least one-inch by two-inch (1" X 2") driven securely into the ground upon which exact line is shown by a tack. Stakes shall be adequately guarded; guards within each run shall have the offset indicated in a clear and legible manner.

Staking intervals shall be one hundred feet (100') for tangent alignment, and twenty-five feet (25') for curved alignment. For curves of radius fifty (50') feet or less, the center of the radius shall be staked.

B. Grade: Grade stakes shall be at least one-inch by one-inch (1" X 1") driven to grade and blue-topped, or driven securely into ground to adequate depth and guarded. Each guard shall indicate the station and the cut or fill if the grade stake is not driven to grade.

1.03 PROTECTION OF EXISTING UTILITIES

The Contractor shall investigate and be aware of locations of existing utilities within the street; whether city sewer, water, storm, electrical or private electricity, gas, telecommunications or other facilities. The Contractor shall conduct work in such a manner as not to endanger other utilities near the project. Any damage done to other utilities shall be repaired at the Contractor's expense. (Underground Service Alert: USA 811 or 800-642-2444.)

1.04 REPAIR OR RECONSTRUCTION OF EXISTING FACILITIES

Any existing city or private facilities damaged during the course of the work shall be repaired, replaced or reconstructed to equivalent or better condition. Any pedestrian access areas (sidewalk, corner ramps, etc.) shall be replaced to meet current ADA accessibility requirements. The City Engineer will determine the extent to which replacement facilities shall be upgraded.

1.05 MAINTAINING TRAFFIC

All traffic control shall be in accordance with the California MUTCD. A traffic control plan must be submitted and approved prior to the start of the project. No street shall be closed without prior written approval of the City Traffic Engineer.

Detours and alternate routes may be proposed by submittal if not shown on an approved set of improvements plans. Alternate routes and detours shall be adequately signed and delineated. Allow 5 working days for review of a plan submittal by the Engineer.

Provide temporary traffic control signs and striping whenever existing traffic control features (i.e., signs, striping, markers, etc.) are removed during construction. The temporary features shall be maintained until they are replaced with the permanent signs and striping improvements.

Residences and business shall not be unduly prevented from access to their properties. Temporary dirt or gravel ramps shall be provided at all residential and business driveways during non-working hours.

Access to fire hydrants for emergency use shall be maintained at all times.

Contractor is responsible for providing a minimum of forty-eight (48) hours notice to emergency services, other agencies, businesses and residents prior to performing any work that restricts street access. Other agencies to be notified include, but may not be limited to:

- Woodland Joint Unified School District
- Yolo County Transportation District (public busses)
- Waste Management
- Yolo dispatch (Police and Fire Services)
- Others as deemed appropriate by the Engineer.

Agency contact information will be provided by the Inspector if it is not included with the improvements plans.

In addition to the notification required above, on arterial and collector streets, changeable message signs (CMS) are required to be posted as follows:

- 14 calendar days before new signals are put into operation

- 7 calendar days before modifications to existing signals are put into operation after a cease in operation of the signal
- 5 working days before initiating any approved detour lasting more than 2 days on major arterial streets
- 3 working days before initiating any approved detour lasting more than 4 days on minor arterial or collector streets
- 3 working days before initiating any approved lane closure lasting more than 4 days on multi-lane roads.

These time frames may be increased by the Engineer in highly congested areas or as deemed necessary.

Allow 16 feet of width for movement of farm equipment on roads connecting with county roads. Provide separate facility for pedestrian travel where pedestrian facilities exist on the affected roadway. Provide "Share The Road" construction signs when delineated bicycle lanes exist on the affected roadways.

When backfill operations of an excavation are in the traveled way (whether traverse or longitudinal), and cannot be properly completed within the same working day, steel plate bridging with skid resistant surface treatment shall be installed (see Construction Specifications, Section 8.05, Trench Plates). Trench excavations not backfilled must be braced within the trench with proper shoring or bracing, as necessary to ensure trench wall stability.

For the purposes of this section, roadways are classified as follows:

Major Arterials		
County Road 102	Court Street	East Street
Heritage Parkway	Main Street	
Minor Arterials		
Beamer Street	Gibson Road	Kentucky Avenue
Pioneer Avenue	West Street	
Collectors		
Ashley Avenue	Branigan Avenue	Cannery Road
College Street	Cottonwood Street	Cross Street
El Dorado Drive	Farmers Central Road	Farnham Avenue
Gum Avenue	Lemen Avenue	Lincoln Avenue
Matmor Road	Maxwell Avenue	Meikle Avenue
North Street	Third (3rd) Street	Woodland Avenue

1.06 WARNING SIGNS

All construction on City streets shall be adequately posted with signs, barricades, lights and flares to prevent accidents to pedestrians or motorists. Said warning devices shall be consistent with the California MUTCD and approved by the City Traffic Engineer.

Flaggers shall be required where the Contractor's workers or equipment must use streets on which traffic is not restricted.

Contractors must notify property owners along the construction project at least forty-eight (48) hours in advance of starting work on the project, if property owners' access to their premises might be impacted.

1.07 DUST, MUD AND NUISANCE ABATEMENT

The Contractor shall not allow the site of the work to become littered with trash and waste material, and shall maintain the same in a neat and orderly condition throughout the construction period. The Contractor shall not store or allow the storage of materials within the public right-of-way without written permission of the City Engineer. Storage of materials during working hours for the immediate work may be allowed.

Whenever a Contractor's construction activities are such that there is potential for a dust nuisance, the Contractor must have on hand at all times, adequate sprinkling equipment to control dust on the area under construction as well on adjacent streets. The Contractor shall clean up any materials tracked onto adjacent streets.

A. Adjacent Streets and Sidewalks: Adjacent streets and sidewalk frontages shall be swept at least once a day to remove silt and other dirt which is evident from construction activities.

B. Construction Vehicles: The Contractor is responsible for cleaning after construction vehicles leaving the site on a daily basis to prevent dust, silt, mud and dirt from being released or tracked offsite.

C. Grading Spoils: Dry stock piles of soil shall be watered to prevent the generation of airborne dust. Trucks transporting soil or aggregate materials shall be covered as needed to prevent windblown loss of materials.

D. Water: Water shall be sprayed on all exposed earth surfaces during clearing, grading, earth moving and other site perpetration activities. The exposed earth shall be watered throughout the day to minimize dust.

E. Wind Allowances: Grading activities shall be restricted or halted when winds exceed 15 miles per hour, or as deemed necessary by the City Inspector.

1.08 CONSTRUCTION WATER

All water used on construction projects within the City Limits will be furnished to the Contractor for a fee (Ref. City Code, Sec. 23C-7-6. Construction). Pay the fee as specified in the City of Woodland, Comprehensive Fee Schedule. City water is for use only within City limits. Water shall not be purchased within the City for use outside the City Limits. Construction water shall be per the rates indicated in the fee schedule or as noted in a development agreement and may be charged as follows:

A. Monthly (for construction one (1) month or less).
B. Per acre (as specified in the Development Agreement).
C. Water Meter (attachment to City water supply - City Engineer approval only).

The Contractor shall comply with the requirements as specified by the City of Woodland Operations & Maintenance Division of the Public Works Department for the use of locations for obtaining water. The Contractor shall use an approved valve to attach to the hydrant and control the water and not use the hydrant valve as the control device. The hydrant shall be turned on at the beginning of the work day and off at the end of the day and shall not be left turned on overnight.

1.09 FINAL CLEAN UP

Before final acceptance of the work, the Contractor shall carefully clean up the premises and leave the site in a neat and presentable condition. There shall not be any delay between the time of completion of the construction and the final cleaning up.

Any private property not restored to original condition because of consent of the owner shall require a letter to the City Engineer stating the satisfaction of the owner to final condition of the premises. Said letter shall bear the involved property owner's signature.

The inside of all pipes and manholes shall be thoroughly cleaned of all loose mortar, dirt, mud and other foreign material; and all pipe joints on the inside of the pipe shall be smooth and flush with the barrel of the pipe. Any cracked or loose mortar shall have the loose portion removed and repaired with mortar mixture.

1.10 INSPECTION REQUIREMENTS

Contractors shall provide all necessary equipment and personnel to assist in the performance of final and warranty inspections such as traffic control, ladders, lights, confined space monitoring equipment, etc., as required by the City Engineer.

1.11 REPLACEMENT OF CONTROL NETWORK MONUMENTS

In the event that a Control Network monument must be removed, contractor shall retain a licensed Land Surveyor to reference the monument position prior to commencement of activities that will disturb the monument. Following completion of disruptive activities, contractor shall construct a replacement monument in conformance with Section 2.06, Design Standards and any applicable sections of the Professional Land Surveyor's Act.

1.12 NEW CONTROL NETWORK MONUMENTS

New monuments constructed to extend the coverage of the existing City of Woodland Geodetic Control Network. Monuments shall conform to Section 2.06, Design Standards and any applicable sections of the Professional Land Surveyor's Act.

{Blank Page}

SECTION 2: SUBGRADE PREPARATION

2.01 DESCRIPTION

Subgrade is that portion of the roadbed on which pavement, surfacing, base, sub-base or a layer of any other material which may be specified is placed. The preparation of the subgrade may be required at various elevations, depending on the number of layers of material specified to support the final wearing course of pavement or surfacing.

2.02 COMPACTED NATIVE EARTH SUBGRADE

The existing native earth, after removal of trash, vegetation, roots and other unstable material, shall be excavated to rough subgrade. The top six inches (6") below finished subgrade shall be ripped, scarified and re-compacted until the required ninety-five percent (95%) relative compaction is obtained. Said subgrade shall be smooth and to grade and cross section as shown on the plans within a tolerance of ± .05 feet.

Where excessive moisture is encountered preventing adequate compaction of subgrade, the Contractor shall have the following options to achieve desired moisture content. In either case, the desired compaction and complete stabilization with no deflection shall be obtained.

A. Windrowing material to dry to optimum moisture content and placing subgrade reinforcing fabric; or

B. Over excavating subgrade by a minimum of 12 inches (12") and placing 3/4 inch (3/4") Class 2 aggregate base with subgrade reinforcing fabric. The Contractor shall first obtain permission from the City prior to using this option. Bottom of subgrade shall be smooth and compacted prior to placement of aggregate base.

C. Using Lime or Lime/Fly Ash to dry and stabilize the subgrade. The use of Lime or Lime/Fly Ash to stabilize the subgrade shall be designed by a Registered Geotechnical Engineer and receive prior approval from the City Engineer.

D. For designs that have deep lift AC sections, subgrade repair may substitute equivalent AC deep section for equivalent AB with prior approval from the City Engineer.

2.03 COMPACTED AGGREGATE BASE SUBGRADE

This section applies to the addition of aggregate base to an existing roadbed. The existing aggregate base shall be cleaned of all HMA, dirt and loose material, scarified, and compacted to ninety-five percent (95%) relative compaction in advance of placing new material thereon.

Broken, failed or unsatisfactory portions of the existing roadbed shall be removed and disposed of. The area in the exposed spaces shall be compacted to the required ninety-five percent (95%) relative compaction after which the space shall be filled with the specified material.

Where excessive moisture is encountered preventing adequate compaction of subgrade, the Contractor shall have the following options to achieve desired moisture content.

A. Windrowing material to dry to optimum moisture content and placing subgrade reinforcing fabric, or

B. Over excavating subgrade by a minimum of 12 inches (12") and placing 3/4 inch (3/4") Class 2 aggregate base with subgrade reinforcing fabric. The Contractor shall first obtain permission from the City prior to using this option. Bottom of subgrade shall be smooth and compacted prior to placement of aggregate base.

C. For designs that have deep lift AC sections, subgrade repair may substitute equivalent AC deep section for equivalent AB with prior approval from the City Engineer.

In either case, the relative compaction shall be a minimum of ninety-five (95) percent and complete stabilization with no deflection shall be obtained.

2.04 ACCEPTANCE SAMPLING AND TESTING OF SUBGRADE

Prior to commencing of construction, a Soils Investigation must be completed. It shall contain results from the following test:

Proctor Curve (AASHTO T-180 or T-99) (ASTM 1557)

- Unit weight
- Optimum moisture

Compaction testing of the subgrade shall be completed in the presence of the City Inspector. The City shall reserve the right to complete as many tests as the City deems necessary to ensure specified densities are attained. The City shall receive a copy of each handwritten Daily Field Report the day testing is performed. All testing that is not completed in the presence of the City Inspector shall be considered non-passing tests. All test locations shall be noted on a set of field drawings and submitted to the City at the end of the project along with all field notes and reports. All lab data from lab testing shall be submitted to the City within forty-eight (48) hours of completion of the lab tests. All percentage compaction requirements stated in this section shall be considered percentages of the maximum unit weight of the compacted material as determined by the tests above.

SECTION 3: AGGREGATE MATERIALS

3.01 AGGREGATE BASE

Aggregate base shall be spread and compacted in accordance with the provisions of Section 26 of the **Caltrans** Standard Specifications and as follows. Thickness shown on the plans shall be the minimum section allowed.

Three-fourth inch (3/4") maximum, Class 2, Aggregate Base.

Recycled Class 2 Aggregate Base, may be used, after first submitting current gradation with certification that the recycled material can meet Caltrans Standard Specifications for Class 2 Aggregate Base and receiving a written approval from the City Engineer.

3.02 ACCEPTANCE SAMPLING AND TESTING OF AGGREGATE BASE

Prior to use of aggregate material, the Contractor shall submit to the Engineer proposed target values for each sieve size. These target values shall be within the ranges shown for the required grading. Also values from the following Test shall be submitted.

Proctor Curve (AASHTO T-180 or T-99, ASTM 1557)

- Unit weight
- Optimum moisture

Cores shall be a minimum of four inches (4") in diameter. The Contractor will be provided a map showing the location where the aggregate base cores are to be obtained within the limits of the Project. The City reserves the right to require additional cores in the event that insufficient data was obtained from the original cores. At the direction of the City Engineer, the Contractor shall core and verify the aggregate base section. Cores are to be backfilled with slurry cement.

During construction, sufficient testing shall be arranged to ensure the following requirements are attained. Certified copies of all results shall be delivered to the City Engineer within 48 hours or work shall be suspended.

Compaction testing of the subgrade shall be completed in the presence of the City Inspector. The City shall reserve the right to complete as many tests as the City deems necessary to ensure that the specified densities are attained. The City shall receive a copy of each Daily Field Report the day the testing is performed. All testing that is not completed in the presence of the City Inspector shall be considered non-passing. All test locations shall be noted on a set of field drawings and submitted to the City at the end of the project along with all field notes. All lab data from lab testing shall be submitted to the City with in forty-eight (48) hours of completion of the lab tests.

A. Gradation: The mixture shall be sampled on a statistical basis, tested to determine gradation. The Contractor or the developer shall be required to submit all lab test results to the City prior to starting work.

B. Compaction: The mixture shall be sampled on a statistical basis, tested to determine density. The minimum acceptable density shall be 95 percent (95%) of the maximum density.

C. Surface Tolerance: After final rolling, the smoothness of the course shall be checked. Defective areas shall be corrected, including removal and replacement of material at the Contractor's expense.

The final surface shall be checked by use of a ten foot (10') straightedge at sites selected by the Engineer. The straightedge shall be applied at right angles and parallel, respectively, to the centerline of the roadbed.

The variation of the surface from the testing edge of the straightedge between any two contacts with the surface shall not exceed 0.05-foot above or below the established grades.

D. Thickness: The Engineer may verify conformance with the nominal thickness specified in the contract by checking the course thickness at randomly selected test holes. The thickness shown on the plans shall be considered the minimum aggregate base section allowed. The surface of the finished aggregate base at any point shall not vary by more than 0.05 foot above or below the grades established by the engineer or as stated on the approved plans. Aggregate base that does not conform to the approved plans and grades shall be reworked and recompacted to conform to the approved plans and grades. Contractors and developers shall be responsible for the cost of all retesting of the aggregate base section. Additional test holes may be required to identify the limits of non-conforming areas.

The Contractor shall correct non-conforming areas to the satisfaction of the engineer. The digging, refilling, and compacting of these test holes shall be performed by the Contractor under the supervision of the engineer.

3.03 SAND

Sand shall be free from clay or organic material, suitable for the purpose intended and shall be of such size that 90 percent to 100 percent will pass a No. 4 sieve and not more than 5 percent will pass a No. 200 sieve. Sand equivalent to be a minimum of 50.

3.04 CRUSHED ROCK

Nominal size shall be ½-inch. All rock shall be crushed and have at least one fractured face. Crushed rock shall meet the following gradation requirement:

Sieve Size	Percentage Passing
¾ inch	100
½ inch	90 – 100
3/8 inch	20 – 55
No. 4	0 – 5

{Blank Page}

SECTION 4: HOT MIX ASPHALT

4.01 DESCRIPTION

This work shall consist of furnishing and mixing aggregate and asphalt binder at a central mixing plant, transporting to work site, spreading and compacting the mixture, and placing pavement and pavement (if required) reinforcing fabric in accordance with the provisions of Section 39 of the **Caltrans** Standard Specifications.

Hot Mix Asphalt (HMA):

- Type A, 3/4" maximum, medium **HMA** using PG 64-10.
- Type A, 1/2" maximum, medium **HMA** using PG 64-10.

Residential streets shall be paved with Type A 1/2" maximum, medium **HMA** using PG 64-10 for the top lift. All other lifts shall be Type A 3/4" maximum, medium **HMA** using PG 64-10.

Commercial and Industrial Streets shall be paved with Type A 3/4" maximum, medium **HMA** using PG 64-10 for all lifts.

New pavement shall be crack sealed two months prior to expiration of the warranty bond. All cracks in the pavement and open joints between pavement and concrete shall be filled with crack sealer.

4.02 TACK COAT

Any surface that is to be paved with **HMA** except unprimed aggregate base or compacted native earth subgrade shall be coated in accordance with the provisions of Section 39 and Section 94 of the **Caltrans** Standard Specifications. The existing surface shall be cleared of all loose debris to the satisfaction of the Engineer prior to placing the tack coat.

A tack coat shall be applied to all vertical surfaces of existing pavements, curbs, gutters and construction joints in the surfacing against which additional material is to be placed, to a pavement to be surfaced and to other surfaces designated by the Engineer.

Tack coat shall be applied in one application at a rate of from 0.02 gallon to 0.10 gallon per square yard of surface covered. The exact rate of application will be determined by the Engineer.

A tack coat shall be applied only so far in advance of placing the surfacing as may be permitted by the Engineer. When asphaltic emulsion is used as a tack coat, **HMA** shall not be placed until the asphaltic emulsion has cured.

Immediately in advance of placing **HMA** or asphalt concrete base, additional tack coat shall be applied as directed by the Engineer to areas the tack coat has been damaged.

4.03 MIX DESIGN

Submit Job Mix Formula (JMF) for review and approval in accordance with Caltrans Specification Section 39-1.03 prior to commencement of placement operations. City will review and respond within five (5) business days. Section 39-1.03 specifies process for any changes to JMF throughout the life of the project.

4.04 PLACEMENT

Comply with the provisions of Caltrans Section 39-3 Method Construction Process except as modified herein.

A pre-paving conference shall be convened prior to any paving operations unless waived by the Engineer. At the pre-paving conference, the Contractor shall provide the Engineer with:

- The paving plan: The paving plan shall include the location of the asphalt plant, any revisions to the approved asphalt mix design, the order of operations, the lift schedule, the number of passes and the roller schedule.
- A list of key personnel assigned to the paving operations.
- A list of the equipment to be utilized for the paving operation. This list shall include the types and quantities of all equipment as well as the number and type of trucks to be utilized.

Prior to beginning paving operations the Contractor shall obtain the Engineer's approval of the paving plan.

The surface course (final lift) of **HMA** shall not be placed on any roadbed until all utility construction beneath the roadbed has been completed and testing has been completed to the satisfaction of the City Engineer. This includes construction and connection of all final utilities, chlorination for sanitation as necessary, as well as inspection by the City Engineer and the completion of all remedial repairs to the satisfaction of the City Engineer.

Roads constructed as a part of a development containing more than one roadway segment must have final **HMA** paving lift placed after the completion of all items of work for the development other than striping, marking, and adjustment of iron as identified in Section 4.05 below.

The Contractor is responsible for protecting gutters, man holes, valve boxes and all other structures within the paved area during the time which they are exposed before the final lift of paving is placed. Any damage must be repaired before final lift paving.

When placing **HMA** each layer (lift) shall conform to current Caltrans standards for lift thicknesses.

Finished **HMA** surface shall be 0.02-foot above finished Portland Cement concrete surface at points of contact (i.e.; lip of gutter, manhole and valve box encasements, and monument box encasements). The exception to this will be curb ramps which shall conform to current State and Federal ADA guidelines (AC flush at gutter lip of ramp section).

4.05 ADJUSTMENT OF IRON

Manholes, valve boxes, monument boxes, etc., shall be brought to grade, in accordance with City of Woodland Standard Details, after final pavement lift has been placed. All adjustments of iron shall be made using new iron, boxes, etc., unless approved by the Engineer. All manhole frames, lids or gates, valve boxes, monument boxes, and any other style of box or lid shall be new and supplied by Contractor at no cost to the City.

4.06 JOINTS

A. Transverse Joints: The placing of any course of **HMA** shall be as continuous as possible, and the roller shall not pass over any unprotected end of freshly laid mixture except where the laying of the course is to be discontinued long enough to become cold.

In such cases when paving is discontinued, joints shall conform to all Caltrans standards and shall be approved by the City Engineer.

B. Longitudinal Joints: For lifts produced by concurrent paving of adjacent lanes, longitudinal joints shall be treated to insure a tightly bonded and sealed joint. Such treatment shall conform to all Caltrans standards and shall be approved by the City Engineer.

The longitudinal joints for the surface course shall be on centerline and a distance on either side of centerline such that no joint falls in the wheel path of the travel lane. The longitudinal joints in the base course shall be offset from the longitudinal joints in the surface course by a minimum of six (6) inches.

4.07 ACCEPTANCE SAMPLING AND TESTING OF HOT MIX ASPHALT

Prior to use of aggregate material, the Contractor shall submit to the Engineer proposed target values for each sieve size. These target values shall be within the ranges shown for the required grading. Also values from the following Test shall be submitted:

- Asphalt Content (CT-310)
- Crushed Particles (CT-205)
- Sand Equivalent (CT-217)

Cores shall be a minimum of four inches (4") in diameter. The Engineer will approve the HMA core locations. The City reserves the right to require additional cores in the event that insufficient data was obtained from the original cores. At the direction of the City Engineer, the Contractor shall core and verify the HMA section.

During construction, sufficient testing shall be arranged to ensure that the following requirements are attained. Certified copies of all results shall be delivered to the City Engineer within 48 hours or work shall be suspended.

A. Gradation and Asphalt Content: The mixture will be sampled on a statistical basis, tested to determine gradation and asphalt content.

B. Compaction: The mixture will be sampled on a statistical basis, tested to determine density. The density will be tested at the time of placement with a nuclear gauge. The density of the pavement will be determined a second time to confirm the nuclear gage compaction test results from cores taken from the compacted pavement. The minimum acceptable density shall be ninety-five percent (95%) of the maximum density determined as part of the mix design specified in Subsection 3.03.

C. Surface Tolerance: After final rolling, the smoothness of the course shall be checked. All defective areas which may include but are not limited to segregation of mix, raveling, bleeding, checking and cracking shall be corrected by removal and replacement of material at the Contractor's expense. At the direction of the City Engineer, the Contractor or developer shall be required to place a seal coat surface treatment over the defective asphalt surface area or spot patch areas. The seal area shall be the length of the defective area plus 12 inches and the entire width of the lane or street as determined by the Engineer.

The final surface shall be checked by use of a ten foot (10') straightedge at sites selected by the Engineer. The straightedge shall be applied at right angles and parallel, respectively, to the centerline of the roadbed.

The variation of the surface from the testing edge of the straightedge between any two contacts with the surface shall not exceed 3/16 inch.

D. Thickness: The **HMA** will be tested for thickness based on the same cores taken for compaction to determine if pavement thickness conforms to the nominal thickness specified in the contract. The allowable deviation for pavement thickness shall be plus or minus (±) one-eighth inch (1/8") for the allowable deviation for pavement thickness. All core holes shall be filled with mortar with the top two inches (2") compacted with hot asphalt or Hydro mix. Cold asphalt or cutback will not be allowed.

4.08 CONFORM GRINDING OF EXISTING STREETS

A conform grind shall be completed for all new street pavement and reconstructed street pavement sections. Any time new **HMA** is placed against existing asphalt **pavement**, the existing asphalt **pavement** shall receive a conform grind to provide an overlap joint. The conform grind shall be a minimum of six feet (6') wide and a minimum of two inches (2") in depth or as directed by the City Engineer. Grinding machine shall be a track driven grinding machine. Wheel driven grinding machines shall only be used with approval from the City Engineer.

Conform grinding shall also mean wedge grinds, butt grinds, edge grinds, etc.

If fabric is placed prior to the top lift of asphalt, the fabric shall overlap the cold joint by a minimum of 18 inches (18"). Fabric shall not be placed within 12 inches (12") of the edge of the new pavement.

4.09 CRACK SEALING

A. General: Crack sealant shall be a single component, hot-applied, elastically modified asphalt composition, which is specifically produced for effective pavement maintenance sealing material for use in cracks and joints in **HMA** or Portland Cement Concrete pavements. The crack sealant shall be a Poly Flex 3 Sealant or approved equal.

B. Specification: Recommended specification limits for crack sealant when heated in accordance with ASTM D5078 to the safe heating temperature are as follows:

TEST	RECOMMENDED SPEC.
Cone Penetration (ASTM D5329)	15-45
Resilience (ASTM D5329)	30% min.
Softening Point (ASTM D36)	210°F (99°C) min.
Ductility, 77F (25C) (ASTM D113)	30 cm min.

TEST	RECOMMENDED SPEC.
Flexibility (Procedure)	Pass at 30°F (-1°C)
Asphalt Compatibility (ASTM D5329)	Pass
Bitumen Content (ASTM D4)	60% min
Tensile Adhesion (ASTM D5329)	400% min.
Safe Heating Temperature	400°F (204°C)
Recommended Pour Temperature	380°F (193°C)

C. Application: Prior to use, user must read and follow the manufacture specifications for proper product selection, heating methods, pavement preparation procedures, application geometry, precautions and safety procedures. Application shall be performed with pressure feed wand systems from a sealant hot-melt applicator unit.

D. Melting: The sealant must be melted in a jacketed double boiler type melting with effective agitation system. The heat transfer oil in the melting unit should not exceed 525°F (274°C) during melting of the sealant. The unit must be capable of safely heating the sealant to 410°F (210°C). CAUTION: Do not agitate when adding new blocks of sealant because splashing may occur. Prior to applying, sealant shall be heated to between the recommended pour temperature and the safe heating temperature which is shown on sealant containers.

E. Pavement Temperatures: Sealant shall be applied when the pavement surface temperature exceeds 50°F. Application at lower temperatures may result in reduced adhesion due to possible presence of excess moisture or ice in cracks or joints. If the surface temperature is lower than 50°F, it may be warmed by appropriate methods to achieve the minimum required temperature. If conditions require that sealing be performed at lower surface temperatures than 50°F, extreme care shall be used to ensure that cracks or joints are dry and free from ice and other contaminants. Sealant temperature shall be maintained at the safe heating temperature.

F. Pavement Cleaning Procedures: Cracks or joints shall be cleaned using appropriate routing, brushing or blowing operations to provide intact bonding surfaces which are free from all dust, moisture or other contaminants. The City Engineer shall approve the cleaning method.

G. Pavement Cracks: Cracks shall be routed to a minimum width of 3/8 inch (1cm) and a minimum depth of ½ inch (1.3cm). The sealant depth to width ratio shall not exceed 2 to 1.

Following appropriate cleaning, sealant shall be applied to a slightly overfilled condition and then leveled to less than a 1/8 inch (3mm) thickness with a squeegee or sealing shoe to produce a band which is not greater than ½ inch (1.3 cm) on each side of the crack.

H. Concrete Joints: Backer Rod (ASTM D5249, Type 1) use is required for concrete joints. Concrete joints shall be slightly overfilled and then leveled to a maximum height of 1/8 inch (3mm) above the pavement surface to produce a band which is not greater than ½ inch (1.3 cm) on each side of the joint edge.

I. Compatibility with Overlay or Seal Coat: The sealant will be subjected to effects from heat from the overlay and carriers for the surface treatments and seal coats. If sealant is applied on top of the pavement, and an overlay is then placed, bumps and shoving can occur in the overlay. All crack sealant placed in the City of Woodland must be compatible with surface treatments and overlays. Prior to placing a surface treatment or seal coat, a test strip shall be placed to verify compatibility of the sealant and the new surface treatment.

{Blank Page}

SECTION 5: SURFACE TREATMENTS

5.01 SAND SEAL

A. Description: This work shall consist of applications of asphalt emulsion and screenings in accordance with Section 37 and Section 94 of the **Caltrans** Standard Specifications.

B. Condition of Surface: Before any surface receives a seal coat, it shall be thoroughly cleaned of all dust and dirt and any loose materials and vegetation. The variation of the existing surface from the testing edge of a straightedge between any two contacts with the surface shall not exceed 3/16 inch. All depressed areas shall first be repaired. Method of repair shall be submitted and approved by the City Engineer prior to start of work.

C. Weather Conditions: Sealing shall not be attempted when surface temperature of the pavement or ambient temperature is below 50° F., or when rain is forecast within 72 hours of placement.

D. Asphalt Binder: Asphalt Emulsion shall be CRS-1h conforming to requirements for CRS-1 in Section 94 of the current **Caltrans** Standards except that the Penetration at 25° C (75 Degrees Fahrenheit) on the Residue from Distillation Test shall be between 40 and 90. The emulsion shall be delivered and applied at a temperature between 75 Degrees F (24° C) and 130 Degrees F (54° C).

E. Aggregate: Sand shall be free from clay or organic material, suitable for the purpose of sand seals, and shall be of such size that ninety (90) to hundred (100) percent shall pass a No. 4 sieve, not more than twenty (20) percent shall pass a No. 30 sieve and not more than one (1) percent shall pass a No. 200 sieve. The sand shall have a minimum Fineness Modulus (FM) of 3.5.

F. Acceptance Sampling and Testing of Seal Coats: Values from the following test shall be submitted prior to use of aggregate material:

- Grading (CT-202)
- Sand Equivalent (CT-217)

Asphalt Binder will be accepted on "Certificate of Compliance" for each load delivered to project.

G. Application of Sand Seal Asphalt Emulsion: The spray truck shall be capable of spraying the oil consistently at rates in the range of 0.12 to 0.25 gallons per square yard and shall be maintained in good working order. The typical spray rate shall be 0.15 gallons per square yard. Each distributor truck shall be equipped, at all times, with its proper measuring stick and calibration card. On-site calibration of distributor trucks, for determining actual spread rate of asphalt emulsion, shall be

performed when directed by the Engineer. A two-axle, short wheel base, distributor truck is required for all cul-de-sacs and radii.

NOTE: Computer controlled distributor trucks with spread rate and quantity printouts are required for asphalt emulsion application.

Spray truck driver shall be responsible for maintaining adjustment of the spray bar and nozzles to achieve an even, consistent spray pattern including the spray wand. Spray truck driver shall keep a record of amounts of oil used on each street segment and provide the quantities to the City at the end of each day. The City shall maintain the right to reject any spray truck and/or truck driver from the job at its discretion. Supplier shall identify all spray applicator vehicles to be used for the application of asphalt emulsions with submittal of the bid. Proper function and operation of the asphalt emulsion vehicle and associated spray units, rods, wand, nozzles, and etc. is required during application of asphalt emulsions.

H. Temporary Traffic Striping, Signs And Markings: All permanent striping and markings shall not be applied to a sand seal surface until a minimum of 14 calendar days has passed. The Contractor shall be responsible for maintaining all temporary striping, markings, and construction signs. The Contractor shall review the temporary traffic control on a daily basis. All costs associated with maintaining the temporary traffic striping, signs, and markings shall be paid for by the Contractor.

5.02 FOG SEAL COATS

A. Description: The work covered by this specification includes the design, testing and quality control for this proper production of the asphalt seal coat product and all materials, equipment and workmanship required for the application of a seal coat to an existing asphalt pavement. Seal coats shall be applied in a two step application process.

B. Materials: The materials for Asphalt Seal coat immediately prior to mixing shall conform to the following requirements:

1. Asphaltic Emulsion: Asphaltic Emulsion shall be SS1h, conforming to the requirements in Section 94 of the **Caltrans** Standard Specification, "Asphaltic Emulsions". Table 1 or 2, with the exception of the penetration on residue from distillation which shall conform to a value of 20 to 60, or Clay stabilized emulsion, with a pH not greater than 7.0 and solids content of not less than 45 percent (45%). Two percent (2%) latex shall be added into the seal coat. The properties of the SS1h shall be determined in accordance with AASHTO designation T59 "Testing Emulsified Asphalt".

NOTE: Coal tar emulsion and Gilsonite products are not acceptable products.

2. Mineral Aggregate: Mineral Aggregate shall be one hundred percent (100%) passing a #16 mesh sieve and be clean of all decomposed materials or organic materials. The sieve analysis of the Mineral Aggregate shall be determined in accordance with A.S.T.M. Test Method C136 or Cal Test 202.

C. Mix Design: A mix design shall be submitted to the City ten (10) working days prior to placement of the seal coat. The Contractor shall submit lab and test results and Manufacturer's Certificate of Compliance covering proposed material.

Table 4-1

Asphalt seal coats, as manufactured and tested by the Asphalt Seal Coat Manufacturers Association, shall be undiluted and conform to the following:

CHARACTERISTIC	MINIMUM	MAXIMUM	METHOD
Weight (per gallon)	9.0 pounds		A.S.T.M. D244
Cone Penetration at 77°F dmm	340 mm	700	A.S.T.M. D217
% Non-Volatile	50		ASMA A-1 *
Loss on ignition of insoluble residue %		16	
% Non-Volatile soluble in Tri-clorethylene	10	35	A.S.T.M. D2042
Solubility of residue in C2HCL	15	20	
Wet track Abrasion		35 gram loss	A.S.T.M. D3910
Mineral Aggregate Components	#16 Sieve 100% passing		A.S.T.M. C136
Dried Film Color	Black		
Dehydration, 96 hours at 100°F	0.6 min.		
Viscosity	75 KREB		A.S.T.M. D562
Accelerated Weathering (2 yr. Exposure)	No Deterioration		Fed Spec TT-C 555B

** Weigh 10 grams of homogenous product into a previously tarred, small ointment container. Place in a constant temperature oven at 325°F for 90 minutes. Cool, re-weigh and calculate the non-volatile components.*

The following mix design shall be incorporated in a two step seal coat application process

FIRST APPLICATION

- 100 gallons seal coat material
- 200 pounds silica sand (30 mesh)
- 2 gallons latex copolymers
- Appropriate gallons of potable water for dilution

SECOND APPLICATION

- 100 gallons seal coat material
- 2 gallons latex copolymers
- Appropriate gallons of potable water for dilution

D. Surface Preparation: The surface to receive the asphalt seal coat must be free of all foreign material and completely dry immediately prior to seal coat application. Cleaning of the surface may be made by air, vacuum, mechanical sweeping, washing or any other method approved by the Engineer. All oil and grease deposits shall be removed prior to applying the seal coat. The application of an oil seal may be required prior to placement of the seal coat. The oil seal must be compatible with the asphalt seal coat. The seal coat must not be applied without first obtaining the Engineer's approval.

Cracks in excess of one-quarter inch (1/4") and less than one inch (1") in width must be sealed with an approved method prior to placement of the seal coat. The crack shall be cleaned by routing or compressed air. Crack sealer shall be latex modified sealer compatible with the asphalt seal coat. Cracks wider than one inch (1") in width shall be patched with HMA per Section 39 of the California Standard Specifications.

On weathered surfaces or areas such that cleaning operations has left a film of dust, a tack coat of SS1h conforming to Section 94 of the California Standard Specification. The tack coat shall consist of one (1) part SS1h and four (4) parts water or two (2) parts asphalt seal coat with one (1) part water applied at a rate of 0.10 gal/sq. yd. The tack coat shall be completely dry prior to the placement of the asphalt seal coat. On new asphalt surfaces, asphalt seal coats shall not be placed on a new asphalt surface until after a sixty (60) day cure period or as directed by the Engineer.

E. Application: Seal coats shall be applied in a two step application process. Application of the seal coat shall be by mechanical means using a rubber faced squeegee with the curved portion of the squeegee spreading the seal coat. The asphalt seal coat shall be applied in a uniform free flowing method, free of lumps and other solids. Potable water may be added per the manufacturer's recommendation not exceeding ten percent (10%) by volume. If the seal coat is unsuitable after the addition of the water, the seal coat shall be rejected and

removed from the project. Application rates will vary depending on the texture of the existing asphalt surface receiving the seal coat. The surface may require a second seal coat over the first seal coat if the surface is rough. The following application rates are to be used as a guideline. The engineer will make the final determination as far as the application rates to be used.

Asphalt seal coats shall be applied when ambient temperature and surface temperature is fifty degrees (50°) and rising. Seal coats shall not be applied when ambient temperatures are in excess of eighty degrees (80°) without the possibility of a pretreatment per the manufacturer's recommendation. Seal coats shall not be applied within twenty-four (24) hours of rain or inclement weather. Traffic shall not be allowed on the seal coat for twenty-four (24) hours after the last application of the seal coat. All striping and marking shall not be applied to a seal coat surface until a minimum of 14 calendar days have passed. All asphalt seal coats shall be measured by the gallon before the addition of extra sand, binder, or water.

SURFACE TYPE	MINIMUM APPLICATION RATES
Smooth Dense Surface	20 Gals. Per 1000 Sq. Ft.
Medium Surface with loss of fines	30 Gals. Per 1000 Sq. Ft.
Rough Aged Surface without cracks	40 Gals. Per 1000 Sq. Ft. *
Excessively Rough Surface	50 Gals. Per 1000 Sq. Ft. *

**The addition of #30 mesh sand with additional binder is recommended for the first coat. The addition of sand shall not exceed three (3) pounds per gallon without an approval of the Engineer. Additional binder shall consist of 1/10 gallon of SS1h.*

{Blank Page}

SECTION 6: PORTLAND CEMENT CONCRETE

6.01 CONCRETE CONSTRUCTION

A. Description: Work shall conform to Sections 73 and 90 of the **Caltrans** Standard Specifications except as modified herein. **Concrete** shall contain not less than 564 pounds of cementitious material per cubic yard **and shall attain a minimum compressive strength of 3,000 psi after 28 days.**

B. Concrete Aggregates: Unless otherwise specified, concrete aggregates shall conform to ASTM designation: C 33-57 and this specification.

C. Admixtures: All admixtures shall be approved by the City Engineer prior to the use of the admixture. A certified mix design shall be submitted prior to placement of concrete. Concrete used for curbs, gutters, sidewalks, driveways, ramps and similar flatwork, shall contain synthetic reinforcing fibers in the amount of 1.0 pounds per cubic yard. Synthetic reinforcing fiber shall be "MultiMesh", manufactured by Nycon, Inc., or approved equivalent. Synthetic reinforcing mesh is not required for buried concrete foundations such as, signal poles, sign posts, concrete collars around utility boxes in pavement, manhole bases, storm inlet bases or similar.

D. Expansion Joints, Weakened Plane Joints, And Score Lines: Expansion joints, weakened plane joints, and score lines shall be placed in accordance with City of Woodland Standard Details unless otherwise approved. Expansion joints shall extend the full width of the concrete being placed and consist of a compressible material, such as bitumen-treated felt. The felt shall extend the full thickness in depth of the concrete section to be installed. Weakened plane joints shall extend the full width of the concrete being placed, be one and one-quarter inch (1-1/4") deep and one-quarter inch (1/4") wide. Score lines shall be one-quarter inch (1/4") deep and one-eighth inch (1/8") wide and form a square pattern in the surface portion of the sidewalk of pedestrian travel.

E. Finishing Curb And Gutter: It is the City's desire to avoid removal of AC for reconstruction of curb and gutters. For the purpose of setting forms for the reconstruction of curbs and gutters, it is required that existing PCC be removed as to not damage the AC edge which will then be used as the form for the new PCC. If extensive damage is done to the existing AC edge, a minimum of two feet (2') will be saw-cut from lip of gutter and current pavement restoration fees will be charged. See Standard Details for further information. Prior to removal of any forms, the surface shall be finished true to grade by means of a straightedge float. In the construction of the perpendicular curb, and immediately after removing the front curb forms, the face of the curb shall be worked with a trowel to present a smooth even surface, followed with a final fine brush finish with brush strokes parallel with top of curb.

The face of the finished curb shall be true and straight, and the top surface of the curbs and gutters shall be of uniform width, free from humps, sags, ridges or other irregularities. All gutters shall be installed with the correct gutter pan cross slope per City Standards. All curbs and gutter pans not conforming to the standard detail shall be removed and replace at the Contractors expense. Surface shall be fine brush finished in accordance with City of Woodland Standard Details.

It is further required that the conveyance capability be tested as soon as the surface of the gutter has set sufficiently to permit the introduction of a shallow stream of water without causing damage to the gutter surface. All flow line irregularities shall be corrected before the concrete surface has taken initial set.

The letter "S" shall be stamped over each sanitary sewer service. The letter "W" shall similarly be stamped over each water service. The letters "GV" shall be stamped opposite each gate valve when behind curb. On vertical curbs, the letter shall be placed on the face of the curb. For rolled curbs it shall be stamped on the top and for low profile, on the face of the curb.

F. Finishing Sidewalk: After sidewalk concrete is placed, concrete shall be struck off to proper section. The surface shall then be wood floated in a longitudinal direction so the final finished surface shall not vary more than one-eighth inch (1/8") from a ten foot (10') straightedge except at grade changes. The final finish shall be accomplished with a fine hair broom made with light continuous straight strokes perpendicular to the direction of the sidewalk. The City Engineer may modify the method of finish to fit the requirements of the job. All exposed surface edges shall be neatly rounded with an edging trowel. Surface markings and lines shall be made in a manner as specified by the City Engineer.

G. Concrete In Historic Areas: Preservation of historic sidewalks, curb and gutter is required within the areas identified on the Historic Sidewalk District map. There are variations to the historic sidewalks as they differ considerably from the existing sidewalks. Replacement of historic sidewalk shall be of that which was removed to include the same texture, color and scoring pattern.

All concrete replacement shall be in conformance to the City Standards and meet the requirements listed below:

1. Color: All newly placed concrete shall be integrally colored with a pigment color that most closely matches the existing adjacent concrete to be replaced.

2. Scoring: All longitudinal and transverse scoring lines shall match the adjacent remaining sidewalk.

3. Finish: All concrete shall be lightly broom finished to best match the texture of the adjacent remaining sidewalk.

H. Damage And Repairs: **Refer to Section 1.04, Repair and Reconstruction of Damaged Facilities.** All damage done or openings cut in concrete sidewalks, curbs or gutters during the progress of the work shall be repaired by the Contractor to the

satisfaction of the City Engineer. Any necessary patching due to faulty construction or failure of concrete to properly set shall be done to the satisfaction of the City Engineer without additional cost to the City. Any curb, gutter and sidewalk to be repaired shall typically be removed to the nearest weakened plane joint or score line. If unique field conditions warrant an individualized consideration, the City inspector shall determine the boundaries for restoration, which shall typically be no less than the width of the sidewalk. Repairs shall be made by removing and replacing the entire area of concrete between the City identified boundaries for removal. All saw-cuts shall be the full depth of the concrete section. All damaged edges shall be removed by additional saw cuts at Contractor's expense.

I. Reconstruction Of Driveways: **Refer to Section 1.04, Repair and Reconstruction of Damaged Facilities.** Widened or reconstructed driveways must be removed to the edge of pavement. Existing curb, gutter and sidewalk must be saw-cut to full depth of the concrete at the limits indicated and the concrete between the sawed joints must be removed cleanly with no spalling of the sawed edge. Any industrial or commercial driveway that has been modified or cut into for any purpose shall be completely removed and a new driveway installed per City Standards.

It is the City's desire to avoid removal of AC for reconstruction of curb and gutters. In newly paved streets (3 years or less), it is required that existing PCC be removed as to not damage the AC edge which will then be used as the form for the new PCC. If extensive damage is done to the existing AC edge, a minimum of two feet (2') will be saw-cut from lip of gutter and current pavement restoration fees will be charged. See Standard Details for further information.

J. Curing Compound: All newly placed concrete surfaces exposed to the air shall be sprayed uniformly with a curing compound, conforming to the requirements of ASTM Designation: C 309, Type 2, Class B. Application shall be a pigmented compound of white or gray and applied at a nominal rate of one gallon per 150 square feet. The curing compound shall be applied to the concrete immediately following the finishing operation before the surface moisture sheen disappears.

K. Grade And Inspection: No alteration, repair, construction, or concrete placement shall be undertaken until the forms and subgrade have been approved by the City Engineer.

L. Warning And Protection To Public: Any construction, alteration or repair undertaken on a public street or alley must be adequately posted with signs, flares, lights, barricades and other warning devices to adequately protect the public in accordance with Section 1.04.

M. Undue Delay In Completing Work On Public Property: Persons undertaking construction, alteration or repair of curb, gutter and sidewalk shall execute work completion to ensure the general public will not be unnecessarily inconvenienced. New concrete shall be placed within 72 hours of the removal of the existing concrete. All entities working within the City's right-of-way shall be solely and

completely responsible for the conditions of the job site, including safety of all persons and property during performance for the work. This requirement shall apply continuously and not be limited to normal working hours. Safety provisions shall conform to all applicable Federal, State, and local laws, ordinances, and codes, and to the rules and regulations established by the California Division of Industrial Safety, and to other rules of law applicable to the work.

N. Acceptance Sampling And Testing Of Concrete: During construction concrete material shall be sampled and tested for compliance with these specifications.

6.02 CONCRETE IN STRUCTURES

A. Description: This work shall conform to Section 51 of the **Caltrans** Standard Specifications and shall refer to concrete placed in culvert headwalls, retaining walls, pump pits and other reinforced concrete structures. Specifically excluded from this work shall be concrete in pavements, curbs, gutters and sidewalks. **Concrete shall contain not less than 590 pounds of cementitious material per cubic yard and shall attain a minimum compressive strength of 4,000 psi after 28 days.**

B. Curing: All newly placed concrete for cast-in-place structures such as pipe headwalls, endwalls, drainage inlets, and other miscellaneous concrete structures identified as minor structures in Section 51 of the **Caltrans** Standards, shall be cured by the water method or the forms in place method. The curing compound method shall be used on all finish concrete surfaces immediately following finishing. All cast-in-place structures shall not be backfilled for a period of ten (10) days.

C. Acceptance Sampling And Testing Of Concrete: During construction, concrete material shall be sampled and tested for Compressive Strength (CT-521) and Water/Cement ratio **as well as any other tests deemed necessary by the Engineer.**.

6.03 PERVIOUS CONCRETE PAVEMENT

This work shall consist of furnishing and placing pervious portland cement concrete. Comply with the provisions of ACI 522.1, "Specification for Pervious Concrete Pavement" public by American Concrete Institute. The designer shall prepare a mix design and include it on the project plans.

Minimum Pervious Concrete Requirements	
Constituent	**Limits**
Cementitious materials	**450 to 700 lb/yd^3**
Aggregate	**2,000 to 2,500 lb/yd^3**

Minimum Pervious Concrete Requirements	
Constituent	Limits
Water : cement ratio (by mass)	0.27 to 0.34
Aggregate : cement ratio (by mass)	4.0-4.5 : 1
Fine : coarse aggregate ratio (by mass)	0-1 : 1
Aggregate finer than ¼" sieve	Not recommended
Unit weight	100 to 125 lb/ft^3

At least two test panels, minimum area of 200 square feet, shall be placed and tested for compliance with the design requirements. If either of the test panels meets the design requirements, then they may be left in place and incorporated into the work. Otherwise the test panels shall be removed and replaced with materials that comply with the design and acceptance testing requirements. The second test panel may be omitted if the first one complies with requirements.

Do not perform a slump test on the fresh concrete. Do not allow foot traffic on the fresh concrete. Strike off concrete between forms using a form-riding paving machine or vibrating screed or other acceptable method. Do not use steel trowels or power finishing equipment.

Water may be added at the jobsite although in limited amounts since pervious concrete mix is sensitive to too much water and may subsequently fail to perform as required.

6.04 STEEL REINFORCEMENT

This work shall consist of furnishing and placing reinforcement of the dimensions and shape required and shall conform to Section 52 of the **Caltrans** Standard Specifications.

6.05 CONCRETE FORMS

A. General Description: Side forms shall be provided to assure accurate grade and alignment and to support the edges of the concrete to be poured. Before placing side forms, the earth beneath them shall be excavated to the proper grade and shall be compacted per the City Standards and free of all vegetation. Side forms shall have full bearing upon the earth throughout their entire length. All concrete that abuts any **HMA** surface shall be formed with a 1-1/2 inch (1½") batter. Side forms of steel or timber shall be in such condition that the top edge of each individual section of form does not vary more than one-quarter inch (1/4") from a true straight line in the length of ten feet (10') and shall be placed to the required grade and alignment of the edge of the finished pavement. They shall be so supported

during the entire operation of placing, tamping and finishing the concrete that they will not at any time deviate laterally more than one-quarter inch (1/4") or vertically more than one-eighth inch (1/8") from proper line and grade.

All forms, whether timber or metal, shall be thoroughly cleaned and oiled before being used and shall be restored to their original condition each time they are used throughout the job. Each individual length of form must be frequently tested, and if it fails to conform to the above requirements, it shall be rejected from the work.

Top six inches (6") of subgrade shall be compacted to the required ninety-five percent (95%) relative compaction and free of all vegetation. All soft and unstable material shall be removed to the depth as specified by the City Engineer and be replaced with compacted fill material acceptable to the City Engineer.

All concrete shall be placed on a minimum of four inch (4") Class II AB, compacted to 95 percent (95%). Refer to City of Woodland Standard Details.

B. Form Joints: Form joints shall be so designated that acceptable support is obtained, and in case joints do not furnish such support, the Contractor will be required either to substitute acceptable forms, or with the approval of the City Engineer, to wedge the forms with wood and provide double supporting stakes underneath the form ends. There shall be a one-quarter inch (1/4") expansion gap between the ends of the frame.

C. Timber Side Forms: Timber side forms shall be Construction Grade Douglas fir or better and shall consist of at least two inch (2") material, surfaced on one edge and on the side which is placed next to the poured material. They shall not be less than eight feet (8') long. Their depth shall be equal to the specified depth of the edge of the concrete. Timbers having rounded edges, ends or corners, or split ends, shall not be used.

Timber side forms shall be secured by nailing to side steel pins or stakes spaced not more than three feet (3') apart and driven vertically in such a manner that their tops shall be one inch (1") below the top edge of the side form. These stakes shall not be less than one and one half inches (1½") wide, three-quarter inch (3/4") thick, and twelve inches (12") long. The length shall be increased when character of the soil will not give sufficient bearing to a twelve-inch (12") stake.

Side forms shall be spliced with a section of timber not less than two feet (2') in length, one-half inch (½") thick and side form width, which shall be nailed length-wise, lapping the joints.

D. Metal Side Forms: Metal side forms shall be straight, free from warp, of heavy section, with sufficient rigidity to prevent springing during the placing, tamping

and finishing of the concrete mixture. Their depth shall be equal to the specified depth of the edge of the concrete. Forms shall be of the full depth required, in one piece. Splicing of forms by the addition of a wooden base will not be permitted. Metal side forms shall rest each end upon a two by three inch (2" x 3") stake of adequate length to rigidly support the form but in no case shall the stake be less than eight inches (8") long. The stakes shall be driven with their tops to the line and grade for the bottom of the side forms.

Metal forms shall be staked firmly by means of metal stakes, placed not more than five feet (5') apart, and shall be so designed that stakes may be driven through the base of the form and locked in position.

E. Maintenance Of Forms: Side forms of either wood or metal must be trued up and maintained to the required line and grade prior to inspection and maintained at true grade until concrete is set. When side forms do not conform to the correct line and grade, or have become loose, this shall be considered sufficient cause to stop work until the fault is corrected.

6.06 DETECTABLE WARNING SURFACE

A. All Construction

Detectable Warning Surface (also known as truncated domes) or Tiles shall be supplied in large sheets (3'x4', 3'x5', etc.) to minimize joints between tiles. Tile color shall contrast with surrounding concrete, either dark tile on light new or existing surfaces or light tile on dark(er) existing surfaces. Acceptable colors are Red or Black thatched.

Submit tile material data and manufacturers recommended installation procedures for review and approval.

B. New Construction

Tile materials shall be prefabricated slip-resistant concrete tiles with integral color complying in all respects with the Americans with Disabilities Act requirements. Tile materials shall be TekWay Dome-Tiles by StrongGo LLC or approved equal.

For new construction, tiles shall be wet-set during concrete placement operations. Anchor tiles into wet concrete using bolts with integrally cast threaded inserts in the bottom of the tile. Provide one bolt per corner and one at the center of each tile. Bolts shall extend about 2 inches into the concrete.

C. Retrofit Construction on Existing Concrete Ramps

Tiles system shall be surface mount prefabricated flexible materials with integrally cast colors. Tile materials shall be ADA-Tile by ADA Solutions, Inc., Armor-Tile or approved equal.

City Inspector will review the field situation with the contractor prior to commencement of work. Prepare concrete surface by sandblasting or abrasive mechanical means to remove accumulated dirt and weathered concrete. Anchor tiles in place using a combination of adhesive and expansion anchor bolts. Bolts shall be installed at 12" centers around edges of the tile. Apply caulk around edges of tile to prevent edge lift.

SECTION 7: GEOTECHNICAL FABRIC

This work shall consist of furnishing and placing fabric in accordance with provisions in Sections 39, 68, 72 and 88 of **Caltrans** Standard Specifications.

{Blank Page}

SECTION 8: UNDERGROUND PIPELINE CONSTRUCTION

8.01 DESCRIPTIONS

A. Trench:

A trench is defined as an excavation in which the depth is greater than the width. Excavation for appurtenant structures such as, but not limited to, manholes, pipelines, transition structures, junction structures, vaults, valve boxes, catch basins/drain inlets, thrust blocks, and bore pits shall be deemed to be in the category of trench excavations. Trench excavation shall include dewatering prior to beginning trenching and removal of all material of any nature that may interfere with the construction work.

B. Dewatering:

Dewatering shall mean removal of groundwater by mechanical means to prevent intrusion of groundwater into the underground work area. Bedding material and pipe shall not be placed in groundwater or in a trench where the level of groundwater is within 6" or affects the firmness of the trench foundation. Placement of spoil materials on the paved street area shall not be allowed.

C. Tunnel, Bore and Jack:

Any pipe or facility placed underground using methods that minimize the amount of disruption to other surface and sub-surface improvements. Any method other than open cut trenching shall be considered as tunneling or boring and jacking. This method involves excavating entry and exit pits for installation of the underground improvements.

D. Horizontal Directional Drilling:

A type of bore and jack underground tunneling using specialized drilling equipment along with electronic sub-surface locating equipment to track the horizontal and vertical location of the underground pipe work. It is generally used to install underground pipes and conduits within built-up areas to minimize surface excavation and disruption to the public. It also involves excavating small diameter holes (potholes) at all sub-surface utility conflicts for visual confirmation of clearances.

E. Drilling Plan:

The Contractor shall prepare and submit a written plan of their tunneling, bore & jack or HDD methods for review and approval prior to starting work. The plan shall include contingency procedures for dealing with any spills of drilling fluids beyond the limits of the bore hole or access and exit pits. The Contractor shall have equipment and materials on hand at the work site for dealing with such spills. The

plan shall include, but is not limited to, company experience and qualifications, licenses, other agency permits, personnel list, equipment, drilling additives, materials to be installed, access & exits points, work & layout areas, logging & records management, drilling process (pilot hole, reaming, pull back), MSDS as needed, hazardous materials handling & disposal, etc.

Installation of any underground pipeline mains and services requiring precise vertical control of slope and elevation shall be installed using open trench methods (for example; sanitary sewers and storm lines). HDD methods may be used at the contractor's option for installing smaller diameter conduits and pipes not requiring precise vertical control (electrical conduits, water services, private utilities, etc.)..

Open trenching shall be prohibited on all newly paved streets as defined in section 7.14 Special Consideration for Streets Under Moratorium.

Refer to the Irrigation Section, Section 21, Construction Specifications for landscape trenching, backfill and compaction information.

8.02 MAXIMUM OPEN TRENCH WIDTH

The maximum clear width of the trench at the top of the pipe shall not be more than the outside diameter of the pipe at any point plus two (2') feet. Greater width of the trench at the top of the pipe shall be permitted only on written approval by the City Engineer or by plan design. In no case shall the free working space on each side of the pipe be less than six inches (6") without City Engineer's approval.

If maximum trench width is exceeded, the Contractor shall provide additional bedding, another type of bedding, a higher strength of pipe, or any other additional work, as required or approved by the City Engineer, to adequately install and protect the pipe equal to the original design, at no additional City cost.

8.03 MAXIMUM OPEN TRENCH LENGTH

The maximum length of open trench, where prefabricated pipe or other structures are to be placed, shall be the distance necessary to accommodate that amount of pipe which can be installed and backfilled in a single day. The distance is the collective length at any location, including open excavation, pipe laying and appurtenant construction and backfill which have not been temporarily resurfaced. The use of steel plates as open trench or excavation cover shall be allowed only with prior approval of the City Engineer. All trenches or excavations within a sidewalk area or driveway shall be covered with steel plates. The use of plywood for open trench or excavation cover shall not be allowed within or adjacent to the City right-of-way.

The maximum length of open trench allowed to be covered with steel plates shall be a total of fifty (50) lineal feet or as approved in writing by the Engineer.

8.04 BRACING AND SHORING EXCAVATIONS

The manner of bracing and shoring excavations shall be as set forth in the rules, orders and regulations of the State of California Construction Safety Orders, Division of Industrial Safety.

Contractors may be required at the discretion of the City Engineer to provide drawings or calculations by a registered engineer five (5) working days prior to beginning construction for specially designed bracing and shoring of an excavation where standard pre-manufactured bracing or shoring cannot be used.

Contractors shall submit a copy of their current Annual Excavation Permit issued by the State of California Division of Industrial Safety (CAL-OSHA) along with the Contractor's own Trench Safety Plan prior to the start of construction.

8.05 TRENCH PLATES

Steel plates shall be used for temporary cover of trenches and other excavations. All trench plates used in the City right-of-way shall have a skid resistant surface treatment. When backfilling trenches and excavations within a paved street section or within the concrete curb, gutter and sidewalk area, whether transverse or longitudinal, and the work cannot be properly completed within the same working day, trench plates with non-skid surface treatment will be required to maintain all vehicular, bicycle and pedestrian traffic flow. The following conditions shall apply:

- All steel trench plates shall extend beyond the edge of the trench wall a minimum of twelve (12") inches.
- All steel trench plates shall be fully supported around the perimeter to prevent tipping.
- Trenches and excavations shall be adequately shored or braced to withstand highway traffic loads.
- All trench plates shall be tack welded together at the end of each day.
- All trench plates shall be pinned in each corner to prevent movement.
- Temporary paving or cold-mix asphalt concrete (cutback) shall be placed around all edges of the trench plates.

- A maximum of fifty (50) lineal feet of trench plating shall be allowed unless otherwise approved in writing by the Engineer.

The following table shows minimum required thicknesses for trench plates:

TRENCH WIDTH	MINIMUM PLATE THICKNESS
1.0 feet (0.3 m)	½ inch (13 mm)
1.5 feet (0.45 m)	¾ inch (19 mm)
2.0 feet (0.6 m)	1 inch (22 mm)
3.0 feet (0.9 m)	1 inch (25 mm)
4.0 feet (1.2 m)	1¼ inch (32 mm)

For trenches and excavations with spans greater than four feet (4'), a structural design shall be prepared by a registered civil engineer and approved by the City.

All trench plating shall be designed for HS20-44 Truck loading per the Caltrans Bridge Design Manual.

Trench plates shall maintain a skid resistant surface treatment having a minimum coefficient of friction equivalent to 0.35 per California Test Method 342. A Rough Road Sign (W33) shall be used in advance of all trench plates.

Steel trench plate deformation may occur during loading, but if a steel plate is deformed without loading to at least 1.2 cm (.5 inch) per 2.4 meter length (8 feet) the plate shall be removed and replaced.

8.06 TUNNELING, BORE & JACK, AND HDD OPERATIONS

All existing utilities shall be potholed for actual horizontal and vertical location prior to bore & jack, tunneling or HDD operations. The City shall receive a copy of all permits and orders for the installation of any facilities that will use bore & jack, tunneling or HDD methods within the City right-of-way or within any other agency's jurisdiction. Including, but not limited to, Caltrans, railroads, and private property within City Limits.

When the work involves installing a casing pipe, all voids between the inside of the casing and the pipe shall be completely backfilled by blowing sand or pumping grout between the casing and the facilities within the casing as directed by the City Engineer. Casing pipe design shall be shown on the plans. All casings shall be fully welded at each joint. All casings shall have a sealed end cap sealing the end of the casing.

Any pipe to be installed within the casing shall be installed on plastic skids or spacers with a maximum spacing of three feet (3') between skids or spacers and banded to the pipe using stainless steel bands or as approved by the Engineer

All existing storm and sanitary sewer mains and laterals crossed within 2 ½' of tunneling, boring or jacking shall be video inspected with documentation of no damage to these pipes provided to the City and reviewed prior to acceptance of work.

All access and exit bore pit repair must comply with the requirements for bedding, backfill, compaction and pavement surfacing for the repair of a trench.

8.07 BEDDING

For polyethylene encasement requirements refer to Section 12.02 of the Material and Construction Methods Division of these Standard Specification

Bedding is defined as the material supporting the pipe, from the undisturbed soil to the bottom of the pipe.

If soft, spongy, unstable or other unsuitable material is encountered where the bedding or pipe is to be placed, the unsuitable material shall be removed to a depth where stable material is encountered and replaced with a suitable bedding material. In addition to bedding that was replaced, stabilization or sedimentation fabric may be required. All additional bedding material and fabric required shall be at no additional expense to the City. Bedding material shall be a minimum of four (4") inches in depth for all pipe or as directed by the City Engineer. Bedding material shall be placed so that the pipe will be fully supported. All bedding material shall be mechanically compacted to a minimum relative density of ninety percent (90%) prior to the placement of the pipe.

The following material shall be used:

1. Sanitary Sewer Lines, Storm Drain Lines, Manholes and Other Structures with the Exception of Cast-In-Place Pipe: Use Crushed Rock (½- inch) for VCP and pipe materials. Use Sand for PVC pipe materials. Use a filter fabric barrier at interface between crushed rock materials and sand to prevent infiltration of sand into the crushed rock.

2. Water Mains, including Lateral Service Lines: If Ductile Iron and Copper materials are not polyethylene wrapped, then sand for bedding and initial backfill shall also meet the following requirements: Sand material shall be of a good quality with a minimum resistivity of 5,000 ohm-cm, a minimum pH of 6.0, a maximum chloride concentration of 300 ppm and a maximum sulfate concentration of 1,000 ppm.

8.08 INITIAL BACKFILL

Initial backfill shall be the area between the trench bedding where the pipe or other structure rest to twelve inches (12") above the pipe. All initial backfill shall be of the same material that was placed for the bedding. Initial backfill shall be compacted under the haunches of the pipe. Jetting of trenches may be allowed only upon receiving the City Engineer's approval.

When groundwater is encountered, the trench shall be kept dry until the bedding material is placed and compacted, pipe placed, initial backfill is placed and final backfilling of the trench or excavated area is at least fifty percent (50%) complete.
After the initial backfill is placed, a fabric barrier shall be placed between the initial backfill and final backfill.

8.09 FINAL BACKFILL

Final backfill is defined as the material placed between the top of the initial backfill to the top of finish surface grade. Final backfilling shall take place after the initial backfill has been inspected and accepted.

All final backfill within existing streets or after subgrade has been made and compacted shall consist of ¾ inch Class II aggregate base. All narrow trench final backfill within existing streets or after subgrade has been made and compacted shall consist of a non-shrink slurry or Control Density Fill (CDF).

On previously undeveloped land (new construction), final backfilling may be completed with native material providing that the native material is free of rock(s), rubbish, debris and other unsuitable material. When the required compaction cannot be achieved, ¾ inch (3/4") aggregate base material shall be required at no additional expense to the City.

Final backfill in an existing street shall be ¾ inch (3/4") Class II Aggregate Base above the initial backfill and shall be compacted to a minimum of ninety-five percent (95%) relative compaction or as directed by the City Engineer.

Upon written request and written approval of the City Engineer, contractors may use or be required to use a non-shrink slurry or CDF. As a final backfill for facilities placed under large structures, large diameter pipe, or other facilities which makes compaction difficult, a non-shrink slurry or CDF shall be used.

Upon completion and acceptance of subgrade by the City Engineer, any further excavation shall be considered as work in an existing street or right-of-way.

Where it becomes necessary to over-excavate in order to remove large rocks, debris or other objects interfering with the planned excavation, the voids that remain shall be backfilled

and compacted the same as the trench. Excess excavation required to install the facilities shall be considered part of the original excavation and all expenses shall be at no additional expense to the City.

8.10 COMPACTION OF BACKFILL

All backfill shall be mechanically compacted. Permission to use specific compaction equipment shall not be construed as guaranteeing or implying that the use of such equipment will achieve the required compaction results or will not result in damage to adjacent structures, existing improvements, surrounding ground or improvements being installed. The Contractor shall be completely responsible for obtaining the required compaction. The Contractor is required for notifying the City Engineer when compaction testing is to be completed.

Mechanically compacted backfill shall be placed in horizontal layers. Each layer shall be evenly spread, moistened or dried, and then compacted to ninety-five percent (95%) relative compaction throughout the entire depth of the layer.

All trench backfill shall be tested for compaction after every two-(2) vertical feet of backfill. Trench backfill that is not tested shall be considered as backfill that has failed compaction. All backfill that has failed compaction test shall be removed and the trench backfill recompacted.

The Contractor shall be responsible for all costs to retest any previously failed compaction tests along with any additional staff time.

Jetting or excess moisture conditioning of trench backfill material is not allowed without prior written permission from the City Engineer.

8.11 SLURRY CEMENT

Slurry cement backfill may be used as an alternative to complying with Sections 8.08 through 8.10, Construction Specifications with prior approval from the City Engineer.

Slurry Cement backfill shall conform to Section 19-3.062 of the **Caltrans** Standards and shall be a fluid-like, workable mixture of aggregate, cement and water. All slurry shall be of the non-shrink type.

The concrete mixes shall meet the specified compressive strength requirements when tested in accordance with ASTM C31 procedures.

Cement shall conform to the provisions in Section 90-2.01, "Cement," of the **Caltrans** Standards, except that testing will not be required.

For trenches twelve inches (12") or less, the pipe or conduit shall be installed per the City Standard Details, then backfilled with non-shrink slurry cement.

The percentage composition by weight of the screenings shall be as follows:

SIEVE SIZES	SAND – PERCENT PASSING
No. 4	100
No. 8	85
No. 16	58
No. 30	38
No. 50	18
No. 100	4
No. 200	1

Not less than 188 pounds of cement shall be used for each cubic yard of material produced. The water content shall be sufficient to produce a fluid, workable mix that will flow and can be pumped without segregation of the aggregate in placing.

All the excess excavation required to install the facilities shall be considered part of the original excavation and all expenses shall be paid for by the Contractor.

8.12 HMA PLACEMENT

After backfilling and compacting trenches passing through pavements, three inches (3") of asphalt cutback shall be placed to grade. Temporary asphalt cutback shall be maintained at Contractor's expense until permanent paving is installed.

All trenches through asphalt concrete **pavement** shall be permanently paved with a minimum of four inches (4") of **HMA** placed in two (2) lifts. All trenches shall be "T" cut prior to the placement of the permanent **HMA**.

Existing **asphalt pavement** or Portland Cement Concrete (PCC) shall be saw-cut or planed only. Jack-hammered edges shall not be allowed.

8.13 CRACK SEALING OF TRENCH PATCH

After all permanent **HMA** or PCC trench patches have been installed, the joint between the existing concrete and the newly placed patch shall be crack sealed. Crack sealing shall be per Standard Specification Section 4.08, Crack Sealing, Construction Specifications. The cost of crack sealing shall be at no additional City expense.

8.14 SPECIAL CONSIDERATIONS FOR STREETS UNDER MORATORIUM

The City has a moratorium on cuts in all streets with recently placed surfaces. New streets and those with recently placed asphaltic concrete or concrete surfaces have a three (3) year moratorium and streets with recently placed surface seal treatments have an eighteen (18) month moratorium.

Upon submission of proof that no alternative to cutting exists or in the case of an emergency, open cutting may be approved by the City Engineer. This is strongly discouraged as cutting and patching streets increases the potential for premature deterioration, water intrusion and differential settlement of pavements.

When approval is received from the City Engineer, in addition to the standard repair requirements, the following repair practices shall be observed:

A. Cuts or trenches in new streets or recently placed **HMA** surfaces:
Resurfacing of streets shall conform to Detail 0214. The restoration and T-section limits shall be rectangular areas with limits measured from the widest portion of the excavation. Where the restoration area joint is within two (2) feet of the lip of gutter or lane line, restoration shall extend to that boundary. Where the joint is within a wheel path, restoration area shall be extended beyond the wheel path by a minimum of one (1) foot. Where the limits of restoration are within 25 feet of another repair, the restoration area shall be extended to meet the limits of that repair.

Restoration area and T-section areas shall be sawcut after backfill of trench is complete. Existing base material directly beneath the T-section shall meet 95% compaction.

All equipment used for the asphalt pavement grind and repair shall be approved by the City Engineer before use. All final paving shall meet all applicable City Standards for pavement installation.

B. Cuts or trenches in streets with recent surface seal treatments:
Sealing of streets shall include trench repair and crack sealing per Detail 0214 with the limit of restoration equal to the T-section limit. Where the T-section joint is within two (2) feet of the lip of gutter or lane line, T-section shall extend to that boundary. Where the joint is within a wheel path, T-section shall be extended beyond the wheel path by a minimum of one (1) foot. Where the limit of seal is within 25 feet of another repair, the seal shall extend to meet the limits of that repair.

Surface sealing the patched area is required no sooner than 30 days nor later than 90 days after completion of the pavement repair. Areas are to be sealed as follows:

1. Trench perpendicular to traffic lanes: For the entire width of any affected traffic lane, place seal a minimum of ten (10) feet on both sides of the trench line or 100 total feet, whichever is greater.
2. Trench parallel to traffic lanes: For the entire width of any affected traffic lane, place seal the full length of the trench plus ten (10) feet on both ends or a minimum of 100 total feet, whichever is greater.

All existing centerline markings shall be removed before seal operations and replaced after completion.

Surface seal methods and materials shall be determined by the City and shall conform to City requirements.

C. Potholing in new or newly surfaced streets shall meet the following standards:

1. Potholes shall be no more than two (2) feet by three (3) feet. Larger areas shall conform to item 8.14A or 8.14B.
2. No more than two potholes may be performed in any ten (10) foot by twenty (20) foot section of new pavement. If more than two are required, the area will be considered under items 8.14A or 8.14B.
3. After potholing and exploration are completed, potholes shall be filled with slurry cement conforming to Section 8.11. Final surface of the slurry cement shall be two (2) inches lower than the surrounding surface. Pave the area with two (2) inches of **HMA** such that the surface is flush with the adjoining pavement. Crack seal all pavement joints.

All pothole repairs that are deemed unacceptable by the City Inspector shall be refinished in accordance with item 8.14A or 8.14B as appropriate.

SECTION 9: LIME STABILIZATION

9.01 DESCRIPTION

Lime stabilization shall conform to Section 24 of the **Caltrans** Standard Specifications and these provisions.

9.02 MATERIALS

Lime-stabilized materials shall be clayey type soils free of rubble, rubbish and vegetation and shall be tested and approved prior to commencement of lime stabilization operations. Lime shall be high-calcium or dolomitic quicklime conforming to the definitions in ASTM C51. The lime shall be tested prior to delivery and during spreading operations. The sample of lime shall conform to the following requirements:

A. High-calcium quicklime shall contain not less than one hundred and thirteen percent (113%) calcium hydroxide $Ca(OH)_2$, per California Test Method 414.

B. Dolomitic quicklime shall contain less than fifty-seven percent (57%) calcium oxide, CaO, and not less than ninety-five percent (95%) combined calcium oxide, CaO, and Magnesium oxide, MgO, as determined by California Test Method 404.

A Certificate of Compliance in accordance with Section 6-107 of the **Caltrans** Standard Specifications shall be furnished with each delivery of lime and shall be submitted to the City Engineer with a certified copy of each delivery weight.

Water used in subgrade stabilization shall be clean and potable. All water shall be added during mixing, re-mixing and compaction operations, and during curing.

Material Safety Data Sheets (MSDS) shall be posted on site by the Contractor and all personnel entering the construction site are to be advised of the materials being used and of any necessary precautions to be taken and the type of treatments to be followed if injury occurs. The Contractor is responsible to notify all City personnel that are requested to enter the site, i.e. inspection, scheduled work, or emergency repairs of City utilities, of the materials on site at the time of request and prior to site entry.

9.03 MIXING

The Geotechnical Engineer shall submit a mix design in writing to the City Engineer. Contractors and developers shall obtain written authorization prior to lime-treating soil. The use of flyash shall be requested by the Geotechnical Engineer and approved by the City Engineer prior to its use. The minimum depth of lime treatment shall be sixteen inches (16"). The material to be treated shall contain no rocks or solids larger than one

and one-half inches (1½"). The rate of spread shall be per linear foot of blanket and shall not vary more than five percent (5%) from the designed application rate.

Mixing equipment shall be equipped with a visual depth indicator showing the mixing depth, an odometer or a foot meter to indicate travel speed and a controllable water additive system for regulating the water added to the mixture. Mixing equipment shall be the type that can mix the full required depth and leave a smooth bottom of the treated section. The entire mixing operation shall be completed within seventy-two (72) hours of the initial spreading of lime. All material shall be uniformly mixed. Moisture shall be at least two percent (2%) above optimum. Mixture shall comply with the following:

SIEVE SIZE	MINIMUM PERCENT PASSING
1-1/2 inch	100
1 inch	95
No. 4	60

9.04 COMPACTION

Lime treated soil shall be compacted to a relative compaction of not less than ninety-five percent (95%) unless otherwise approved by City Engineer.

9.05 CURING

The surface of each compacted layer of lime-treated material shall be kept moist until covered by a subsequent layer of lime-treated soil or other material for a period not to exceed three days or by applying a curing seal immediately following the final trimming and rolling of the treated layer. The curing seal shall be applied at the rate of 0.15 gallons per square yard of surface. No traffic of any kind shall be allowed on the grade for a minimum of 72 hours following the curing seal application. HMA shall not be placed within seven (7) days following the application of the curing seal.

9.06 TESTING

All lime treatments of the subgrade shall be tested and observed by the Geotechnical Engineer. All field density testing and proof rolling shall be made by the Geotechnical Engineer after the completion of the final compaction of the treated soils and prior to the application of the curing seal.

Lime-treated subgrade shall have no deflection prior to placement of the curing seal, aggregate base or HMA. A complete report outlining the compaction results, stabilization, depth of section and final lime percentage from the Geotechnical Engineer

shall be submitted to the City prior to the placement of any subsequent layer of material on top of the lime-treated subbase.

{Blank Page}

SECTION 10: SANITARY SEWER COLLECTION SYSTEM

10.01 SEWER PIPE

The City's sewer system shall be Vitrified Clay Pipe (VCP), Polyvinyl Chloride Pipe and in special applications Ductile Iron Pipe (DIP) shall be used. See Section 10.03 for applications. All references to ASTM standards in these specifications shall refer to the latest revision currently available.

10.02 MATERIALS

A. Vitrified Clay Pipe:

Vitrified clay pipe shall be extra strength conforming to the latest revision of ASTM Specification C700. **VCP shall not be used below the seasonal groundwater level.**

B. Polyvinyl Chloride Pipe:

PVC pipe and fittings shall be made in accordance with ASTM D3034 or ASTM F679 and ASTM D1784 in physical, dimensional and chemical requirements. PVC gravity sewer pipe shall conform to ASTM D3034 SDR 26 for diameters up to 15 inches (15") and ASTM F679 SDR 26 for diameters from 18 inches to 24 inches. The standard laying length shall be 20 feet (20') (plus/minus) 1-inch. A maximum of 15% may be furnished in random lengths of not less than 10 feet (10') each.

C. Submittals

Submittals shall be provided by the Contractor for all items requested by the City Engineer, including but not limited to:

1. Pipe and Jointing Material
2. Fittings
3. Specialties
4. Pipe shall be tested for flattening, stiffness and joint tightness (as appropriate) at the factory of production in compliance with ASTM standards as indicated below. Samples shall be taken at the beginning of production and tested for compliance to ASTM D3034 or ASTM F794. If required by the Engineer, the Contractor shall supply the City a letter of certification from the manufacturer attesting to the pipe meeting these tests.

a. Flattening: Three specimens of pipe per pipe size furnished, minimum of 6" long, shall be flattened between parallel plates in a suitable press until the distance between the plates is 40% of the outside of the pipe. The rate of loading shall be uniform and such that the compression is completed within 2-5 minutes. Remove the load and examine the specimens for splitting, cracking, breaking or other defections.

b. Pipe Stiffness: Pipe Stiffness test shall be performed in accordance with ASTM D2412. The stiffness of pipe shall be determined at a 5% deflection datum. Test specimens shall be a minimum of two pipe diameters or 4 feet in length, whichever is less.

c. Joint Tightness: Joint Tightness test shall be performed in accordance with ASTM D3212. Test shall be performed on materials and products from the same lot of those furnished to the project.

d. Plant Inspection: If the City requires inspection of production of the pipe, the manufacturer shall provide advance notice of when and where production of materials will begin.

e. Struts: All pipe, 24 inches in diameter and greater, shall be strutted prior to placement in the trench. Each strut shall consist of 2 – 2x4's placed in a perpendicular cross. A minimum of 4 struts equally spaced shall be placed per pipe length. Struts to be removed prior to backfill above the pipe zone.

D. Joint Type:

Pipe joints shall be constructed with an integral bell and spigot and an elastomeric gasket push-on-type joint or using machine couplings of a sleeve type with rubber ring gaskets and machine pipe ends to form a push-on type joint.

Each spigot shall have a reference mark to facilitate pipe assembly. The gasket shall be contained in a machined groove on the pipe spigot such that when compressed the gasket will not displace and will form a positive seal. All rubber gaskets shall be stored in a cool, well ventilated place and not be exposed to oils, fuels, petroleum, solvents and direct sunlight. The gasket shall meet all requirements of ASTM F477. Pipe lubricant shall be listed with the National Sanitation Foundation. Solvent cement joins are strictly prohibited.

E. Fittings:

Clay pipe fittings shall conform to ASTM Specification C700. Fittings for PVC pipe shall have bell and/or spigot configurations compatible with the pipe and be

manufactured of the same material and furnished by the same pipe supplier or approved equal.

F. Markings:

Each standard or random length of pipe shall be clearly marked with the following as appropriate for the material type:

a. Manufacture's name

b. Date of manufacture

c. Nominal pipe size, i.e., 6-inch

d. Cell classification or material code, i.e., 12454-B

e. Dimension ratio, i.e., SDR 26

f. Product type, i.e., Type PSM

g. Standard specification designation, i.e., 03034

h. Production code

G. Wye Branches:

Wye Branches shall be installed at the locations indicated on the plans. The Wye material shall be the same as the main line (for example, plastic to plastic or clay to clay). The service lateral connecting to the wye may be a different material. House service connection shall be made so sewage is introduced into the main from the top side. The minimum gradient for house service connections is not less than one-quarter inch (1/4") per foot of laying length.

H. Manholes:

The City Standard Manhole shall conform to the drawings shown in the Standard Details. Unless otherwise shown by the Plans or called for in the Special Provisions, the Standard Manhole shall be used on City work. All standard precast manholes shall have five inch (5") thick walls.

a. Manhole castings: All castings for manhole frames, covers and other purposes shall be tough gray iron, free from cracks, holes, swells and cold sheets, and be of workmanlike finish and must conform to the plans. The cast iron shall meet the specifications, ASTM Designation: A 48.48 Class 30.

All castings shall be thoroughly cleaned and the frame and cover ground to ensure a smooth and even fit.

The City standard for manhole frames and covers is that manufactured by the D and L Supply Co., Model No. A-1032 or equal (See Detail No. 0420).

b. Cast-In-Place Manholes: Cast-in-place manholes shall be according to the dimensions shown on the Standard Details and specified in Section 90 of **Caltrans** Standard Specifications.

Forms used in constructing manholes shall be tight to prevent leakage of mortar. The concrete shall be deposited in layers not exceeding six inches (6") in depth and the concrete shall be carefully tamped to prevent voids. After forms have been removed, but while the concrete is still moist, the bottom and sides of the manhole on the inside shall be plastered with cement mortar and made water tight. After pouring, the connections of the pipe to the manhole shall be tight. All mortar shall be waterproof and non-shrinking.

c. Precast Manholes: Precast manholes may be used unless otherwise specified on the plans and shall conform to the dimensions shown on the Standard Details. The manhole components shall be reinforced and shall conform to ASTM Designation: C478.

d. Testing of Manholes: All manholes shall be vacuum tested for leakage after assembly but prior to back-filling around the manhole. Lines deeper than ten feet (10') may be backfilled to base of cone with prior approval from the City Engineer. The Contractor shall furnish all labor, tools and equipment necessary to make the tests and to perform any work incidental thereto. The Contractor shall correct any excess leakage, and repair any damage to the manhole and its appurtenances at no expense to the City.

The sewer manholes shall be tested for leakage by the following method.

i. *Manhole Vacuum Test*. All lift holes and inside and outside joints shall be plugged with an approved non-shrink grout. All pipes entering the manhole shall be plugged, taking care to securely brace the plug from being drawn into the manhole. The test head shall be placed at the inside of the top of the cone section and the seal inflated in accordance with the manufacturer's recommendations. A vacuum of ten inches of mercury (or 5 psig) shall be drawn and the vacuum pump shut off. With the valves closed, the time shall be measured for the vacuum to drop to nine inches (or 4.5 psig). The manhole shall pass if the time is greater than 60 seconds for 48" diameter manholes, 75 seconds for 60" manholes, and 90 seconds for 72" and greater manholes. If the manhole fails the initial test, necessary repairs shall be made with a non-

shrink grout while the vacuum is still being drawn. Re-testing shall proceed until test is satisfactory.

I. Cleanouts:

Cleanouts shall be installed behind curbs where there is no monolithic sidewalk or behind the sidewalk where curb, gutter and sidewalk are monolithic, for each sewer service lateral. Cleanouts shall be installed per Standard Details 0510 or 0512. Sewer service lines extending from the cleanout to the onsite user shall be connected only at the wye fitting at the base of the cleanout. Connections to the cleanout riser shall not be allowed.

J. Protective Manhole Lining:

When required by the City Engineer, manholes shall be lined with T-lock PVC sheet lining material that protects concrete manholes from corrosion. Liner shall be Ameron T-Lock as manufactured by Ameron Protective Lining Products or approved equal. Liner shall be installed by the manufacturer of the Manhole barrel sections.

K. Warning Tape:

Warning tape shall be placed on top of pipe zone backfill centered over pipe. Compaction equipment shall not make direct contact with the pipe. A 2 inch (2") wide green plastic non-metallic tape marked "Buried Sewer Line Below", shall be placed in all main line trenches 12" to 24" inches from the surface.

L. Installation of Pipe:

Handling and transportation of pipe shall be in accordance with the pipe manufacture's published instructions and as modified below.

a. Inspection Before Installation: All pipe and fittings shall be carefully examined for cracks and other defects while suspended and immediately prior to installation. Spigot ends shall be examined with particular care as the area most vulnerable to damage from handling. Defective pipe or fittings shall be set aside for inspection and acceptance or rejection by the City. Pipe and other materials shall not be stored on rocks or gravel or other hard material which might damage the pipe.

b. Lowering of Pipe Material into Trench: Proper tools, equipment and methods, satisfactory to the City, shall be used by the Contractor for the safe and convenient performance of the work. Heavy canvas or nylon slings of suitable strength shall be used for lifting and supporting the material while chains or cables shall not be used. All pipes, fittings and other materials shall be carefully

lowered into the trench, piece by piece in such a manner as to prevent damage to the materials and protective coatings and linings. Under no circumstances shall the materials be dropped or dumped on the ground. If damage occurs to any pipe, fittings or other materials the damage shall be immediately brought to the City's attention. Any dropped PVC pipe shall be marked with paint and removed from the site.

10.03 APPLICATION REQUIRING USE OF POLYMER-LINED DUCTILE IRON WASTEWATER PIPE

Ductile Iron Pipe shall be used in areas of less than three feet (3') of cover or placed at a depth of more than thirty feet (30'). Ductile Iron Pipe shall be used in all separation manholes.

Ductile Iron Pipe used in these applications must be Polyurethane or Polyethylene-lined Ductile Iron Pipe conforming to ANSI/AWWA C-151/A21.51. The lining thickness shall be 40 mils with a minus tolerance of 5 mils in barrel sections and 10 mils in bell and spigot sections.

All field cuts and damaged areas shall be cleaned and re-coated according to the manufacturer's recommendations.

Epoxy-lined ductile iron pipe will be considered for approval upon submission of manufacturer's specifications

10.04 CAPS/STOPPERS

Caps or stoppers shall be furnished with branch pipes that are to be left unconnected. Caps and stoppers shall be prefabricated, water tight, properly fitting the bell of the branch and pipe, and installed according to manufacturer's recommendations. Caps or stoppers shall be the same material as the main pipe and shall be secured in place. No lubricant shall be used.

10.05 CHANNEL SECTIONS (MANHOLE BOTTOMS)

Transition manholes shall have the flow channel constructed with VCP or PVC "channel section". See Manhole Standard Detail 0515 and 0518.

10.06 SEWER JOINTS

On all pipe sizes of forty-eight inches (48") diameter or smaller, the joints shall be polyurethane compression type conforming to the latest ASTM Specification C425.

All sanitary sewer repairs shall be made using a sewer repair coupling or with an accepted equal as approved by the City Engineer. All approvals must be in writing.

10.07 LAYING PIPE

Pipe shall be laid in accordance with the pipe manufacturer's instructions and as complemented and modified herein.

The interior of pipes shall be kept clean of foreign material before sections of pipe are installed and shall be protected to prevent entry of foreign materials after installation. Groundwater shall not be allowed to enter the pipe.

Pipe shall be laid continuously without grade break upgrade from structure to structure, with bell end upgrade. Immediately prior to joining, the bell surface shall be wiped clean and an approved lubricant applied to both the bell and the spigot. For PVC pipe, the Contractor shall clean the end of the pipe to be joined, the inside of the pipe to be joined and the rubber ring immediately before joining the pipe. The pipe is then shoved together with the aid of a level bar or "come along" tool. Suitable excavation shall be made to receive the bell end of the pipe, the joint shall not bear upon the subgrade and the bottom segment of the barrel shall be uniformly supported by direct contact with firm bedding. If a piece of pipe has been cut, the Contractor shall clearly mark the usable end to show the proper amount of installation distance. Field cuts and connections shall be in accordance with the pipe manufacturer's published instructions.

When pipe is laid within a movable trench shield, all necessary precautions shall be taken to prevent pipe joints from pulling apart when moving the shield ahead. The Contractor shall take all precautions necessary to prevent the "uplift" or floating of the line prior to the completion of the backfilling operation. At all times when laying operations are not in progress, or whenever the workers are absent from the job, the Contractor shall close and block the open end of the last laid section of pipe with water tight plugs or other approved means to prevent entry of foreign material or creep of the gasket joints.

Sewer pipe on straight-through manholes shall be laid continuously through the manhole. Lateral lines entering the main sewer shall butt tightly against the main sewer.

Pipes which are stubbed off for manhole construction or for connection by others shall be plugged or closed off with temporary plugs as specified in the manhole specifications.

Where pipe is connected to manholes or concrete structures without using a flexible connector, connections shall be made so that the standard pipe joint is located not more than two (2') feet from the outside edge of the structure unless otherwise shown.

10.08 CAPPING AND STOPPING OF SEWERS AND SEWER SERVICE LATERALS

Whenever a line is terminated or work is suspended temporarily, the open end of sewers shall be closed as per Section 10.04 of these specifications.

All temporary sewer service laterals after capping or stopping shall have a marking stake installed of at least two inches by two inches (2" X 2") extending from the cap to at least one foot (1') above finish grade behind the location of the sidewalk. If the location of the capped or stopped sewer service connection is located within a parcel of land for which development is not scheduled for an extended period of time (6 months or longer), the marking stake shall be a CALTRANS standard object marker. All abandoned sanitary sewer main lines shall be filled with blown sand.

When onsite sewer laterals are removed or disconnected, such as in building demolition, the City sewer lateral shall be capped or stopped per the above requirements. An "S" shall also be cut into the back edge of sidewalk or on top of curb if no sidewalk exists.

10.09 LOW PRESSURE AIR TEST

Each section of installed pipeline shall be tested with a low pressure air test. The length of the installed pipeline section shall be determined by the City's inspector during installation. In no case shall the section exceed 500 feet. Determine the test duration for the section under test by computation from the applicable equations shown in ASTM Designation C828 or from prepared air test tables, a copy of which is available in the Community Development Department, City of Woodland. The pressure-holding time is based on an average holding pressure of 3 psig or a drop from 3.5 psig to 2.5 psig.

Add air until the internal air pressure of the sewer line is raised to approximately 4.0 psig. After an internal pressure of approximately 4.0 psig is obtained, allow time for the air pressure to stabilize. The pressure will normally show some drop until the temperature of the air in the test section stabilizes. The test shall commence when the pressure has stabilized and is at or above the starting test pressure of 3.5 psig. Before beginning the test, the pressure may be allowed to drop to 3.5 psig. Record the drop in pressure for the test period. If the pressure has dropped more than 1.0 psig, the line is presumed to have failed. The test may be discontinued when the prescribed test time has been completed even though the 1.0 psig drop has not occurred.

The test procedure may be used as a presumptive test which enables the installer to determine the acceptability of the line prior to backfill and subsequent construction activities. However, acceptance testing shall be after trench backfill and compaction, and/or placement and compaction of the entire aggregate base section.

If the pipe to be tested is submerged in ground water, a water infiltration test shall be required per Section 10.17 of these Specifications.

10.10 PROTECTIVE COVERING IN LOW COVER AREAS

Whenever sewer pipe, mains and laterals are laid in a trench at such an elevation that the top of the bell is less than eighteen inches (18") below the subgrade of the street before the addition of any base material, the entire sewer must be constructed of polymer lined ductile iron pipe.

10.11 TRENCHING

See Construction Specifications, Section 8: Trenching, Boring, Backfill and Compaction, and Trenching Standard Details 0200 series.

10.12 CLEANING SEWER MAINS

Before the project shall be accepted by the City of Woodland, the sewer lines must be cleaned by the balling method such as the "Wayne Sewer Ball", or acceptable equal. All dirt and debris must be trapped at the downstream manhole and removed.

10.13 WATER INFILTRATION TEST

If, in the opinion of the Engineer, ground water is encountered in the construction of a section of sewer, the Engineer will require the pipe to be tested by the Water Infiltration Test as follows:

- The end of the sewer at the upper structure shall be closed sufficiently to prevent the entrance of water and pumping of ground water shall be discontinued for at least 3 days, or until the ground water has recovered to its normal status level, after which the section shall be tested for infiltration.

The infiltration into each individual reach of sewer between adjoining maintenance holes shall not exceed 200 gallons per inch internal diameter per mile per 24 hours.

Unless otherwise specified, infiltration will be measured by the Engineer using measuring devices furnished by the City.

All visible leaks shall be repaired by the Contractor regardless of volume involved.

10.14 VERTICAL GRADE STANDING WATER ALLOWANCE

Newly installed sewer pipe ten (10) inches in diameter or less shall have no more than 1/2 inch of standing water in the flowline after construction is completed and no more than 3/4 inch after one (1) year, as part of the warranty inspection. Newly installed sewer pipe

twelve (12) inches in diameter or greater shall have no more than 3/4 inch of standing water in the flowline after construction is completed and no more than one (1) inch after one (1) year, as part of the warranty inspection. This standing water measurement shall be taken during the televised inspection of the sewer lines.

10.15 INSPECTION AND DEFLECTION TESTING

All sanitary sewer installations shall be inspected using Closed-Circuit Television (see Section 18, Construction Specifications).

On flexible conduits, the maximum allowable deflection shall be 5% of the nominal inside diameter. Deflection shall be measured by passing a certified mandrel test on the entire length of the installed pipe after completion of all backfill and compaction operations prior to final layer of paving. The deflection shall not exceed 6% during the warranty period. Pipe will be cleaned after installation, pressure tested and video inspected per City of Woodland Standards.

SECTION 11: STORM DRAINAGE SYSTEM

11.01 DESCRIPTION

This work shall consist of furnishing and laying storm sewer pipe and constructing drainage structures in accordance with Sections 61, 65 and 68 of the **Caltrans** Standard Specifications, as applicable, except as amended here.

11.02 CONCRETE PIPE MATERIALS

Non-reinforced concrete pipe shall conform to ASTM Designation C14, Class 3, as specified in the Special Provisions or as shown on the Project Plans. Storm drain pipe 12 inches inside diameter or smaller may be non-reinforced.

Reinforced concrete pipe (RCP) shall conform to ASTM Designation C76. All storm drain pipes which are 15 inches inside diameter or larger shall be reinforced concrete pipe. The Class (i.e., I, II, III, IV or V) of reinforced concrete pipe shall be minimum Class III unless otherwise specified in the Special Provisions or as shown on the Project Plans.

Rubber gasket bell and spigot RCP shall be used where conditions of groundwater are present.

11.03 CAST-IN-PLACE CONCRETE PIPE (CIPCP)

The City of Woodland does not allow the use of CIPCP.

11.04 PAVEMENT SUBSURFACE DRAINS

Pavement subsurface drains shall be designed and constructed in accordance with the **Caltrans** Standard Specifications.

11.05 LINE AND GRADE

Line and grade shall be given at intervals of not greater than fifty feet (50') and at all alignment changes. Line and grade may be required at intervals of less than fifty feet (50') on curves as may be determined by the City Engineer.

11.06 INSTALLING CONCRETE PIPE

Concrete pipe shall be laid, without break, upgrade from structure to structure. The first pipe laid shall be bedded to establish line and grade. The groove shall be carefully washed with a wet brush and the groove end buttered with mortar. The tongue of the second pipe is then fitted into the groove end of the first pipe until the mortar is squeezed out onto the

inner and outer surfaces. The inner surface of the pipe at the joint is then brushed smooth with a long handled brush to present a contour matching the inner barrel of the pipe and then a band of mortar at least four inches (4") in width and three-quarters inch (3/4") in depth at the joint line shall be placed around as much of the exterior circumference of the pipe as possible.

The external band shall then be protected by covering with a water proof building paper securely held in place.

External banding and internal pointing up shall stay a sufficiently long distance behind the pipe laying so that mortar joints are not disturbed by the laying of the pipe.

All pipes shall be laid on a firm, sloped surface that is free of depressions or irregularities and that is true to line and grade.

The pipe shall have continuous bearing throughout its length and no blocking up or wedging shall be permitted.

Immediately after the laying of each joint of pipe, bedding material shall be placed on each side of the middle of the length of pipe and firmly packed around the lower portion of the pipe to firmly block it from moving when the next length of pipe is laid.

11.07 TRENCHING

See Construction Specifications, Section 8: Trenching, Boring, Backfill and Compaction, and Trenching Standard Details 0200 series.

11.08 MANHOLES, GENERAL

The City Standard Manhole shall conform to Standard Details 0415, 0420, 0425 and 0430 as appropriate. Unless otherwise shown by the Plans or called for in the Special Provisions, the Type I or II Storm Drain Manhole shall be used on City work.

11.09 MANHOLE CASTINGS

All castings for manhole frames, covers and other purposes shall be gray iron, and shall meet the specifications for ASTM Designation A 48.48 Class 30.

All castings shall be thoroughly cleaned and the frame and cover ground to ensure a smooth and even fit.

The City standard for manhole frames and covers is that manufactured by the D and L Supply Co., Model No. A-1032 or equal. (See Standard Detail No. 0420.)

11.10 CAST-IN-PLACE MANHOLES

Cast-in-place manholes shall be according to the dimensions shown on the Standard Details, and in conformance with Section 90 of the **Caltrans** Standard Specifications.

11.11 PRECAST MANHOLES

Precast manholes may be required at the discretion of the City Engineer and shall conform to the dimensions shown on the standard drawings. The manhole components shall be reinforced and shall conform to ASTM Designation C478. All standard precast manholes shall be five inches (5") thick. All standard manholes shall be painted on the outside with sealant after successfully passing a vacuum test.

11.12 CATCH BASINS

The City Standard Catch Basin shall conform to Standard Details 0400, 0405, 0408, and 0410 as appropriate. Unless otherwise shown by the Plans or called for in the Special Provisions, the Standard Curb Inlet shall be used in City work. Concrete shall conform to the Construction Methods, Section 6.

11.13 VERTICAL GRADE/STANDING WATER ALLOWANCE

Newly installed storm drain pipe eighteen (18) inches and greater, shall have no more than ¾ inches of standing water in the flowline after construction in completed and no more than one (1) inch after one (1) year, as part of the warranty inspection. Laterals shall have no standing water in the flow line after construction is completed and after one year of construction. This standing water measurement shall be taken during televised inspections of the storm drainage lines and laterals (see Section 18: Cleaning and Closed- Circuit Television Inspection of Newly Constructed Sanitary Sewer and Storm Drain Pipelines), after water is introduced and allowed to leave for measurement indicator to function correctly.

11.14 CAPS/STOPPERS

Caps or stoppers shall be furnished with branch pipes that are to be left unconnected. Caps and stoppers shall be prefabricated and water tight fitting the bell of the branch pipe and installed according to the manufacturer's recommendations.

11.15 INSPECTION

All storm sewer installations shall be inspected using Closed-Circuit Television (see Section 18 of the Construction Specifications).

{Blank Page}

SECTION 12: WATER DISTRIBUTION SYSTEM

12.01 WATER PIPE

The City's water distribution system piping shall be Ductile Iron (DI) or Polyvinyl Chloride Pipe (PVC). All references to AWWA standards in these specifications shall refer to the latest revision currently available.

The standard laying length shall be 20 feet (20'). A maximum of 15% may be furnished in random lengths of not less than 10 feet (10') each. Threaded holes and mating surfaces shall not be coated. Flange faces shall be coated with asphaltic varnish only. There shall be no coating of materials or mortar on gasket grooves.

12.02 MATERIALS

A. Ductile Iron Pipe:

All ductile iron pipes shall be either push-on, or mechanical joint supplied in lengths 18 feet (18') or more. All ductile iron pipes shall be cement-mortar lined internally according to AWWA C104/A21.4, latest revision. The outside shall be coated with an asphaltic coating and conform to all quality and strength requirements per AWWA C151. Installation shall be in accordance with ANSI/AWWA C600, "Installation of Ductile Iron Water Mains and their Appurtances".

The mechanical properties of ductile iron pipe for sizes 4" through 12" shall conform to AWWA C151, latest revision, minimum pressure Class 350. Pressure class for pipe sizes 14 inch and larger shall require approval by the City Engineer. For pipe sizes 14 inch and larger, the pressure class of pipe shall be determined based on AWWA C150, "Thickness Design of Ductile-Iron Pipe". Calculations shall be submitted with design based on Type 3 trench, and minimum working pressure of 70 psig.

B. Polyvinyl Chloride Pipe (PVC):

PVC Pipe shall be installed as noted in this section and in accordance with manufacturer's recommendations and the latest version of the Handbook of PVC Pipe Design and Construction.

The mechanical properties of PVC pipe for size's 4" through 10" shall conform to AWWA C900 and shall have the same outside diameter (O.D.) as that of cast iron pipe (C.I.P.O.D) in the sizes furnished. Pipe used as branch lines to serve fire hydrants, or used in the construction of water distribution systems in commercial or industrial areas or that are located in a collector street shall be AWWA C900

Class 200 SDR 14 PVC pipe. Pipe used in residential areas that are smaller than 12 inch may be AWWA C900 Class 150 SDR 18 PVC pipe. Pipe located in collector and arterial streets 12 inches (12") or larger shall only be ductile iron pipe.

Approved PVC Pressure Pipe manufactures include, Certain Teed Certa Lock, Diamond Plastics Corporation, J-M Manufacturing, pacific Western Pipe, Vinyl Tech-White Knight, Pressure-Flex Pipe, or approved equals.

C. Submittals:

Submittals shall be provided by the Contractor for all items requested by the City Engineer, including but not limited to:

1. Pipe and Jointing Material
2. Fittings
3. Specialties
4. Pipe shall be tested for hydrostatic burst, sustained pressure, tensile stress and impact stress at the factory of production in accordance with ASTM A746 and AWWA C900 where applicable. If required by the Engineer, the Contractor shall supply the City a letter of certification from the manufacturer attesting to the pipe meeting these tests.

D. Fittings:

All pipe fittings shall conform to AWWA C153 ("Ductile-Iron Compact Fittings, 3 in. - 24 in. and 54 in. - 64 in., for Water Service"), C110 ("Gray-Iron and Ductile-Iron Fittings, 3 Inches through 48 Inches for Water and Other Liquids") and C111, ("Rubber-Gasket Joints for Ductile-Iron and Gray-Iron Pressure Pipe and Fittings,") and as specified below.

Unless otherwise specified or shown on the approved plans, all fittings to be used with PVC Pressure Pipe and DIP shall conform to the standard for "Ductile Iron Compact Fittings for Water and Other Liquids" (ANSI/AWWA C153/A21.3 for MJ compact fittings; C110 for flange fittings). All fittings shall be rated equally to the class of pipe. End connections shall be push-on, mechanical or flanged joints except where specifically shown otherwise on the plans or standard details. Mechanical joint glands shall be ductile iron.

Valves and fittings shall be fusion epoxy coated on the interior and exterior surfaces to a minimum thickness of 12 mils. The epoxy material shall conform to the NSF listing for Drinking Water Additives, Standard 61. **Omit mortar lining on fusion epoxy coated fittings and valves.** Air release/vacuum valve assemblies will be fusion

epoxy coated and are required at high points in a distribution system and as determined by the City Engineer. All connections and restraint bolting assemblage material will be 316 stainless steel with a bituminous coating applied after installation.

E. Valves, Valve Boxes and Valve Covers:

This section includes gate valves installed below finished grade on water mains. Valves clusters shall be placed at all pipe intersections with a valve on each leg of the main. Tees shall have at least two valves and crosses shall have at least three valves. Gate valves shall be used on 12" diameter and smaller mains. Valves shall be placed in between main line intersections at intervals of 500 feet between valves. Valves shall be not more than five feet deep and clustered next to branch fittings. Valve stems and nuts shall be bronze. Fittings shall be ductile iron. Valves shall be manufactured in accordance with AWWA Standards, C509 or C515 (latest revisions), and shall be of the following manufacturers, or approved equal:

ACCEPTED VALVE MANUFACTURERS & MODELS	
MANUFACTURER	MODEL
American AVK Co.	Series 25/00, 25/30, 25/40
American Flow Control	Series 500 or 2500
Clow	F-6100 Series
Mueller Co.	A-2360

Gate valves shall be equipped with mechanical joint inlets and rubber gaskets. Cast iron bolts and follower rings shall be furnished.

Gate valves shall be new, and include ductile iron body and bonnet, mechanical, slip-on, or flanged joint (depending on application and thrust restraint), resilient-seats, open left, O-ring seals, and non-rising stem. All gate valves shall be vertical type and fitted with 2-inch operating nut. All valves to be set plumb and to the line and grade specified. Gate valves shall be factory tested to 300 psi and designed for 150 psi working pressure.

Access to water main gate valves shall be through traffic valve boxes as made by Christy G-3, or approved equal, with a PVC sleeve (Detail 0725). Curb boxes for gate valves shall be Type TF as manufactured by the Forni Corporation, or approved equal. In any event, the barrel of the curb box must be of sufficient depth to extend from finish grade to the top of the valve bonnet.

A two part epoxy repair kit shall be provided by the valve manufacturer. Damaged or scratched surfaces on epoxy coated valves and appurtenances may be repaired

with an epoxy kit per manufacturer's recommendations and to the satisfaction of the Engineer. Otherwise, the damaged valve shall be replaced with a new valve.

F. Tapping Tee, Tapping Sleeve and Tapping Gate Valve:

This section includes information on approved tapping tees, tapping sleeves, and tapping gate valves installed below finished grade as part of water mains.

Valves shall be made in accordance with AWWA Specification C509, latest revision. Tee, sleeve and valve shall be of the following manufacture, or approved equal:

ITEM	MANUFACTURER	MODEL
Tapping Sleeve	Mueller	H-615
Tapping Sleeve	Romac, Romac 3-T	SST-DB
Tapping Gate Valve	Mueller	T-2360, Clow F6114

Access to water main gate valve shall be through traffic valve boxes as made by Christy G-3, or approved equal, with a PVC riser (Detail 0725). Curb boxes for gate valves shall be Type TF as manufactured by the Forni Corporation, or approved equal. The barrel of the curb box shall be of sufficient depth to extend from finish grade to the top flange of the valve bonnet.

G. Fire Hydrants:

Fire hydrants shall conform to the AWWA C502. Hydrants shall be traffic models with an above ground breaking ring. Hydrants shall be dry barrel type with drain port. Hydrants shall be one of the following, or approved equal:

MANUFACTURER	MODEL
American AVK Co.	2780
American-Darling	B-84-B
Clow	Medallion
M&H	129
Mueller	Centurion A-423
Kennedy	Guardian K81

Minimum main valve opening (MVO) size shall be five and one quarter inches (5-1/4"). Inside diameter of standpipe shall be a minimum of six inches (6"). Hydrant shall be equipped with two 2-1/2" NST hose nozzles, one 4-1/2" NST steamer

(pumper) nozzle, a six inch (6") flanged end inlet, three and one-half foot (3½') bury, open left, with one and one-half inch (1-1/2") point to flat, 5-point operating nut. Fire hydrants shall be factory tested to minimum 300 psi and guaranteed for minimum 150 psi working pressure.

Hydrants shall be set plumb with the steamer nozzle facing the street. The centerline of the steamer nozzle shall be no less than 17 inches (17"), but no more than 21 inches (21") above finished grade (top of concrete slab around base of hydrant). The bowl (shoe) of the hydrant shall be restrained by concrete thrust blocking against unexcavated earth or by suitable mechanical thrust restraint. All hydrants shall be furnished with an auxiliary gate valve installed with a flanged connection to the main. All hydrant exterior chains shall be permanently removed prior to acceptance by City. Installation shall include a minimum of 7 cubic feet of 3/4" crushed rock or equivalent for hydrant drain sump.

Fire hydrants shall be prime coated with "1" Step rust inhibitor primer (Interstate Products), or approved equal. All fire hydrants shall be spray painted specified color(s) at time of installation. The body of the fire hydrant, being the portion from the bonnet flange downward, shall be painted with the color indicating the ownership of the hydrant. The cap of the hydrant, being the portion from the bonnet flange of the cap upward, shall be painted with the color indicating its pressure level. ***School Bus Yellow*** shall be the color indicating City ownership and standard water pressure and ***Fire Engine Red*** shall indicate private ownership and boosted water pressure according to the following chart:

COLOR CODES FOR FIRE HYDRANTS			
OWNER	**RATED PRESSURE**	**BODY COLOR**	**CAP COLOR**
City	Standard	School Bus Yellow	School Bus Yellow
City	Boosted	School Bus Yellow	Fire Engine Red
Private	Standard	Fire Engine Red	School Bus Yellow
Private	Boosted	Fire Engine Red	Fire Engine Red

Blue reflective pavement markers shall be installed at each fire hydrant location according to Figure 6-48 of the California MUTCD, except that the offsets shall be twelve inches (12") instead of six inches (6"). Where no centerline stripe is to be placed, the blue reflective marker shall be placed twelve inches (12") off centerline of the street on the same side as the hydrant. Blue markers shall be placed a minimum of twelve inches (12") from all other pavement markings (e.g., crosswalks, legends, arrows).

H. Water Services (1½"-2"):

Wherever the plans indicate the installation of water services and such services are to be installed in street or alley areas, then services shall be installed to the property line under the following designated procedures.

a. Contractor shall excavate and backfill trenches for water services. The trench shall be at least twelve inches (12") wide and shall be graded uniformly. Both water and sewer services may be laid in the same ditch in conformance with City Standard Detail No. 0505. Water services shall not be located within driveways.

b. Minimum water service tap size and fittings shall be one **and one-half** inches (1½"). All service connections shall be made with brass body double bronze straps service clamps. Stainless steel straps are not allowed. The service clamp (saddle) must be Mueller Co., Model BR 2 B series, or approved equal.

c. Corporation ball valves shall be Ford, Model FB500, Jones, Model J372 or Mueller, Model H10013, or approved equal.

   Corporation ball valve threads shall be AWWA IP threads for inlet and AWWA MIP threads for outlet.

   A "Swing Joint" shall be installed directly following the corporation or at the point prior to the type K copper. A swing joint consist of two domestic brass 90 degree street ells with a coupling super grip, tube size compression, female Jones model J2607SG, or approved equal. When utilized, the insulated corporation ball valve and adjacent water main piping must be wrapped with insulation to prevent stray currents from traveling through the soil around the insulator. Water main shall be wrapped at least three feet (3') in both directions of the ball valve. All wrapping shall be in accordance with wrapping manufacturer's instructions; AWWA C209 for Cold-Applied Coatings for the exterior of special sections, connections and fittings; and AWWA C105 for Polyethylene Encasement for Ductile Iron Pipe Systems. The corporation ball valve itself shall be wrapped per AWWA C217, using "STACwrap" from Central Plastics (1-800-441-8095, application information), or approved equal.

d. For water services one and one-half inch (1½") and two inch (2"), insulating flange kits shall be installed to insulate the City water system electrically from private buildings and water systems. Buried insulated flanges shall be wrapped per AWWA C217, using "STACwrap" from Central Plastics (1-800-441-8095, application information), or approved equal. See Detail 0712.

e. Service laterals shall include Type "K" hard copper piping and compression fittings. The service shall be constructed per City Standard Detail Nos. 0505, 0700, 0705, 0706, 0708 and/or 0710, as appropriate.

f. The lockable angle valve shall be one of the following, or approved equal.

Accepted Manufacturers & Models – Lockable Angle Stop Valves		
SIZE	**MANUFACTURER**	**MODEL**
1½" and 2"	Jones	J1527F
	Mueller	H-14286

g. Meter box specifications are dependent upon installation location. Boxes not in the motorized vehicular path of travel (back-of-walk, or in landscaped strip between curb and sidewalk) shall be one of the following or an approved equal.

Meter Box and Lid for Water Services (Back-of-Sidewalk or in Landscaped Strip)				
SERVICE SIZE	**INSIDE BOX SIZE[1]**	**MANUFACTURER**	**BOX**	**LID[2]**
1½"	16"x30"	Carson Christy	1324-12 FL36T	Flush Cover FL36D
2"	20"x36"	Carson Christy	1730-18 FL36T	Flush Cover FL36D
Notes: 1. Dimensions are nominal; provide 1½" min. clearance between piping and box walls. 2. Must include pre-drilled hole for AMR device.				

h. Meter boxes exposed to light vehicular traffic such as residential driveways shall be one of the following or an approved equal. Other traffic situations require a special design to accommodate heavier traffic loads.

Meter Box and Lid for Water Services in Residential Driveways				
SERVICE SIZE	**SIZE[1]**	**MANUFACTURER**	**BOX**	**LID[2]**
1½"	16"x30"	Christy Brooks	B36 #66	B36P or 61G SP or T (Steel)
2"	20"x36"	Christy Brooks	B40 #67	61G MB or T (Steel)
Notes: 1. Dimensions are nominal; provide 1½" min. clearance between piping and box walls. 2. Concrete lids shall be provided with a ¼" deep recess in the top of the lid for the AMR unit. 3. Slab base and box extensions are required for heavier loading situations.				

I. Water Services (3" and Larger):

Materials for water services three inch (3") and larger shall be submitted to the City for approval. See Details 0715 and 0720.

Service saddles used with PVC pipe shall be designed specifically for PVC pipe. Saddles employing a U-bolt type of strap or saddle not fully contoured to the outside diameter of the pipe shall not be permitted. PVC pressure pipe service saddle manufacturers include: Jones, Mueller, or approved equal. Part reference numbers are referenced below:

a. Jones: 4-inch through 12-inch saddles with ¾-inch through 2-inch tap, Part #J-996.

b. Mueller: 4-inch part H-13490, 6-inch part H-13491, 8-inch part H-13492, 10-inch part H-13493, 12-inch part H-13494.

J. Water Meters:

One-inch (1") water meters shall be Sensus Technologies Model SR-II with a 520X transceiver unit. See Engineering Design Standards, Section 8, for selection of meter sizes.

One and one-half inch (1½") and two inch (2") meters shall be Sensus Technologies Model SR with a 520X transceiver unit.

Meters larger than two inches (2") shall be Sensus Technologies meters with a 520X transceiver unit. Model shall be indicated on the plans.

All meters shall be provided with an Intelligent Communications Encoder (ICE) register. All registers shall be programmed to read/record usage to one cubic foot (1 cf).

Positive displacement meters shall include the oscillating piston design.

Initial construction of all domestic services shall include a meter box and a spacer in place of the meter (see Standard City Details). Prior to issuance of a "Certificate of Occupancy", the building Contractor shall furnish and install a water meter. The contractor shall provide the City with the meter size, serial number and street address during final inspection of water meter installation.

K. Backflow Prevention Assemblies:

Installation of backflow prevention assemblies shall comply with Details 0760, 0761 or 0762 as appropriate.

All assemblies shall be tested at the time of installation by an AWWA certified and City approved tester. Test forms shall be obtained from, and copies of test results shall be submitted to the City of Woodland, Public Works Department, Operations & Maintenance Division, 655 North Pioneer Avenue, Woodland, CA 95776. A list of certified and approved testers is also available from the Operations & Maintenance Division.

L. Flanges, Bolts and Gaskets:

Flanges shall be flat-faced and meet either the requirements of AWWA C207 for steel hub type flange fittings, or AWWA C110 Section 10-18 for ductile iron fittings. The flanges shall be marked with the size, name or trademark of the manufacturer and with the AWWA Class; i.e., "E", or pressure rating.

Gaskets shall be 1/8" thick and be of the full face self centered cloth impregnated type. Rubber rings shall conform to the "Standard Specifications for Elastomeric Seals (Gaskets) for Joining Plastic Pipe" (ASTM F477).

Bolt threads shall be lubricated with graphite and oil prior to installation. Bolts and nuts shall be 316 stainless steel coated with bituminous coating. The following table shows the bolt pattern for ASME/ANSI 16.1 Class 125 cast iron flange. This

pattern is rated at 275 psi for Class E steel pipe flanges and 250 psi for ductile iron pipe fittings.

BOLT HOLE PIPE SIZE (INCHES)	DIAMETER (INCHES)	BOLT DIAMETER & LENGTH (INCHES)	NUMBER OF BOLTS
6	7/8	¾ x 3 ½	8
8	7/8	¾ x 3 ½	8
10	1	7/8 x 4	12
12	1	7/8 x 4	12
14	1 1/8	1 x 4 ½	12
16	1 1/8	1 x 4 ½	16
18	1 1/4	1 1/8 x 5	16

Pipe joints shall be made using an integral bell with an elastomeric gasket push-on type joint conforming to AWWA C-111 or using machined couplings of a sleeve type with rubber ring gaskets and machined pipe ends to form a push-on type joint. Solvent cement joints are strictly prohibited.

Couplings shall be in accordance with AWWA C900. Couplings shall be as furnished by the manufacturer and marked with the same information as the pipe. One coupling complete with one gasket each shall be factory assembled to each length of standard length of pipe furnished. The companion gasket for each coupling will be packaged separately for shipment. Couplings shall be the same class as the pipe. Manufacturer shall furnish gasket lubricant for each quantity of pipe furnished. When additional couplings are furnished as separate items, two gaskets shall be furnished and installed in the gasket recess of each coupling.

Where flanged joints are specified, pipe barrel shall be threaded and fitted with flanges in accordance to AWWA C-115 "Flanged Ductile Iron Pipe with Threaded Flanges."

M. Mechanical Joint Fittings:

Mechanical joints, including gasket and bolts shall meet AWWA C111. T-bolts and nuts shall be manufactured of corrosion-resistant high-strength low-alloy Cor-Ten steel or equal. Number and length of bolts shall be as follows:

BOLT HOLE PIPE SIZE (INCHES)	BOLT DIAMETER & LENGTH (INCHES)	NUMBER OF BOLTS
6	¾ x 3 ½	6
8	¾ x 4	6
10	¾ x 4	8
12	¾ x 4	8
14	¾ x 4	10
16	¾ x 4 ½	12
18	¾ x 4 ½	12

Restrained joint pipe and fittings shall be manufactured by U.S. Pipe TR FLEX or approved equal.

N. Mechanical Couplings:

Couplings include transition couplings, flanged coupling adapters, flexible and insulated couplings. Coupling sleeves and flanges may be of gray iron or carbon steel. Bolts and nuts for buried and submerged flanges, flanges in underground vaults and structures and flanges located outdoors above ground shall be 316 stainless steel coated with bituminous material. A washer and nut of the same material shall be provided.

O. Markings:

Each standard length of pipe shall be clearly marked with the following:

a. Nominal size and O.D. base; i.e., 6 inch cast iron pipe size

b. Material code "PVC 1120"

c. Dimensional Ratio; DR 18 where DR is equal to the average outside pipe diameter divided by the minimum wall thickness

d. AWWA pressure class; i.e., PC200

e. AWWA designation "AWWA C900"

f. Manufacturer's trade name and production record code

g. Seal (mark) of testing agency

h. Date code

P. Tracer Wire:

Tracer wire shall be required on all non-ferrous water mains and services and shall meet the following requirements.

a. Tracer wire shall be solid copper with U.S.E. rated insulation and minimum size of AWG #10. Wire shall have a UF rated plastic insulation.

b. Tracer wire shall be interconnected at all pipe tees, pipe crosses and pipe services. Splices shall be "KURNEY" (split bolt) or "KUPLETAP". Installation tape shall be vinyl, electrical with two coats of **Liquid Tape or approved equivalent**.

c. Tracer wire shall be placed outside of the valve riser pipe and shall be placed in the notch at the top of the valve riser pipe.

d. Tracer wire shall be taped to the top of the pipe at ten feet (10') intervals and at all crosses, tees and elbows. When taping tracer wire to pipe, wrap the tape once around the tracer wire before securing it to the pipe.

e. After backfill and compaction but prior to paving, continuity testing of the tracer wire will be required. Any detected damages to the tracer wire shall be repaired before paving will be allowed.

f. Tracer wire shall be continuous between mainline valve boxes and fire hydrants. It shall be attached to the top of the pipe with 10-mil vinyl tape every ten feet (10').

g. Tracing wires through valve boxes shall be placed outside of riser, but inside the box. Tracing wire in vaults shall be attached inside the facility within 5 feet of the rim.

h. Wire splices shall be located above ground and inside of valve boxes and as follows:

    i. Twist the wire together a minimum of 5 twists.

    ii. Install a copper split bolt connector on the splice.

    iii. Solder all connections.

    iv. Cover the splice with mastic tape and wrap with vinyl tape.

The City of Woodland will test continuity of the tracing wire with standard locating equipment upon request for testing by the Contractor. Discontinuity in the tracing wire shall be repaired. It is recommended that the Contractor request continuity testing after subgrade is made, but before asphalt is placed. Final

continuity testing will take place after asphalt is placed and all valve boxes are raised. Costs for said inspection shall be borne by the Contractor.

Q. Warning Tape

Warning tape shall be placed on top of pipe zone backfill centered over pipe. Compaction equipment shall not make direct contact with the pipe. Where the pipe is to be installed below historic groundwater levels or where the trench is subject to inundation, a well-graded crushed rock material shall be placed to the crown of the pipe.

A 2 inch (2") wide blue plastic non-detectable water pipe marking tape, marked "Buried Water Main Below", shall be placed in all main line trenches 12" to 24" inches from the surface. The warning tape shall extend to the nearest valves located on each side of said intersection marker having a decal stating: "Caution Water Pipeline". Appurtenances (valves, ARVs, test stations, etc.) and angle points shall also be marked. Mains in landscaped areas shall be delineated with a brass marker set in an 8-inch concrete cylinder 4 inches above finished grade. The brass marker shall state "City of Woodland Water Main."

R. Installation of Pipe:

Handling and transportation of pipe shall be in accordance with the pipe manufacturer's instructions and as complemented and modified herein. The interior of pipes shall be kept clean of foreign material before sections of pipe are installed and shall be protected to prevent entry of foreign materials after installation. Open ends of installed pipe shall be sealed with watertight plugs or other approved means at times when pipe installation is not in progress. Groundwater shall not be allowed to enter the pipe.

a. Inspection Before Installation: All pipe and fittings shall be carefully examined for cracks and other defects immediately prior to installation. Spigot ends shall be examined with particular care as the area most vulnerable to damage from handling. Pipe and other materials shall not be stored on rocks or gravel or other hard material which might damage the pipe. Defective pipe or fittings shall be set aside for inspection and acceptance or rejection by the City.

b. Lowering of Pipe Material into Trench: Proper tools, equipment and methods, satisfactory to the City, shall be used by the Contractor. Heavy canvas or nylon slings of suitable strength shall be used for lifting and supporting the material while chains or cables shall not be used. All pipe, fittings, valves, and hydrants shall be carefully lowered into the trench, piece by piece in such a manner as to prevent damage to the materials and protective coatings and linings. Under no circumstances shall the materials be dropped or dumped on the ground.

If damage occurs to any pipe, fittings, valves, hydrants or water main accessories, the damage shall be immediately brought to the City's attention. Any dropped PVC pipe shall be marked with paint and removed from the site.

c. Laying of Pipe: Pipe shall be laid in trenches to the line and grade indicated on the plans and as specified. As each length of pipe is placed in the trench, the spigot end shall be centered in the bell or coupling, and the pipe forced home and brought to correct line and grade. The pipe shall be secured in place with approved backfill material tamped under it, except at the bells or couplings. Precautions shall be taken to prevent soil or any other contaminants from entering the joint space.

Joints shall be assembled in accordance with the manufacturer's instructions. Each joint shall be checked with a feeler gauge to assure proper seating of the gasket. Rubber rings and ring grooves shall not be lubricated. All rubber gaskets shall be stored in a cool, well ventilated place and not be exposed to oils, fuels, petroleum, solvents and direct sunlight.

PVC pipe shall be installed in accordance with the AWWA Manual M23 and per the manufacturer's recommendations, except as otherwise provided herein:

i. PVC Pipe shall have been manufactured within the 12-month period prior to installation.

ii. Pipe and gaskets shall be kept clean and protected against sunlight and heat damage.

iii. Pipe showing signs of physical damage or excessive ultraviolet exposure will be rejected and shall be immediately removed from the job site.

iv. Bevels shall be cut off ends of C900 pipe whenever pipe is being installed using mechanical joint fittings.

v. The pipe shall be installed with the manufacturing label showing on the top.

vi. The reference mark or stab line on the spigot end must be flush with the bell end and visible for inspection.

vii. Minimum length of pipe for installation shall be 5 feet.

viii. Transitions between DIP and PVC shall be made as follows:

1. A PVC pipe spigot may be inserted into a DIP bell by cutting off the PVC bevel on the spigot, and leaving no more than a ½-inch taper. A City's inspector shall be present to witness this process.

2. Transitions may be made by the use of a DIP repair sleeve.

The pipe shall be laid true to line, with no visible change in alignment at any joint, unless curved alignment is shown on the plans. Compaction equipment shall not make direct contact with the pipe or be within 6-inches of top of pipe.

When a curved alignment is shown on the plans the maximum deflection at any joint shall not exceed 66% the manufacturer's recommendation for the type of pipe and joint being used. The maximum allowable angular deflection at twin-gasketed couplings shall be 5 degrees. If pipe diameter exceeds 8-inches (8"), fittings will be required.

Bedding and backfill shall be compacted to 95% relative compaction. Groves shall be dug in the pipe bedding to accommodate pipe bells, fittings, and joints so that the pipe is continuously supported by bedding material.

S. Polyethylene Encasement:

The contractor shall encase all underground ferrous metal in loose polyethylene encasement in accordance with the provisions of AWWA C105. This includes all mains, valves, fittings, service lines, and other appurtenances made of ductile iron, copper, brass, etc. Polyethylene encasement for DIP and fittings shall conform to the requirements of ANSI/AWWA C151/A21.51 and shall have a minimum 40 mil polyurethane lining and 8-mil polyethylene encasement.

The wrap shall be installed using C105 Method A, which provides a minimum 12" joint overlap, sealed by adhesive tape or plastic straps. Circumferential wraps of tape should also be placed at 2 feet (2') intervals along the barrel of the pipe. "Clear" non-colored polyethylene film shall be used with minimum thickness of 8 mils. Pipe wrap tape with minimum thickness of 10 mils shall be used to secure and seal the polyethylene wrap as manufactured by Calpico Inc. (Calpico VI-10) or approved equal.

Polyethylene film shall be manufactured from a Type 1, Class C raw polyethylene material conforming to "Polyethylene Encasement for Ductile-Iron Piping for Water and Other Liquids" (ANSI/AWWA C105/A21.5). Approved manufacturers include: Fee Spec's-LP378D Northtown, Fulton Enterprise Inc., Global Polymer Tech, Unisource, or approved equal.

The wrap shall prevent contact between the pipe and the surrounding backfill and bedding materials, but is not intended to be a completely airtight or watertight enclosure. All lumps of clay, mud, cinders, etc., on the pipe surface shall be removed prior to installation of the polyethylene encasement. During installation,

care shall be exercised to prevent soil or embedment material from becoming trapped between the pipe and the polyethylene.

The polyethylene film shall be fitted to the contour of the pipe to effect a snug, but not tight, encasement with a minimum space between the polyethylene and the pipe. Sufficient slack shall be provided in contouring to prevent stretching the polyethylene where it bridges irregular surfaces, such as bell-spigot interfaces, bolted joints, or fittings, and to prevent damage to the polyethylene due to backfilling operations. Overlaps and ends shall be secured with adhesive tape. For installations below the water table, both ends of the polyethylene tube shall be sealed as thoroughly as possible with adhesive tape at the joint overlap.

Polyethylene-encased pipe shall be bedded and backfilled with sand meeting the requirement of the City's standard to 12 inches above the crown of pipe. Installation of polyethylene encasement shall be in accordance with the AWWA C-105, Method A. The following summarizes this method.

a. DIP cuts shall be coated with an approved bituminous material and the minimum length of pipe for installation shall be two feet.

b. Installation of Polyethylene Encasement for Pipe: Cut polyethylene tube to a length approximately 2 feet longer than the pipe section. Slip the tube around the pipe, centering it to provide a 1-foot overlap on each adjacent pipe section, and bunching it accordion fashion lengthwise until it clears the pipe ends.

   Lower the pipe into the trench and make up the pipe joint with the preceding section of pipe. A shallow bell hole must be made at the joints to facilitate installation of the polyethylene tube.

   After assembling the pipe joint, make the overlap of the polyethylene tube. Pull the bunched polyethylene from the preceding length of pipe, slip it over the end of the new length of pipe, and secure it in place. Then slip the end of the polyethylene from the new pipe section over the end of the first wrap until it overlaps the joint at the end of the preceding length of pipe. Secure the overlap in place. Take up the slack width at the top of the pipe to make a snug, but not tight, fit along the barrel of the pipe, securing the fold 2ft centre to centre.

   Any cuts, tears, punctures, or other damage to the polyethylene, shall be repaired by the Contractor as described below. Proceed with installation of the next section of pipe in the same manner.

c. Installation of Polyethylene Encasement for Appurtenances: Bends, reducers, offsets, and other pipe-shaped appurtenances shall be covered with polyethylene encasement in accordance with AWWA C-105 exactly in the same

manner as the pipe. When it is not practical to wrap tees, crosses, and other odd-shaped pieces in a tube, the items shall be wrapped with a flat sheet or split length of polyethylene tube by passing the sheet under the appurtenance and bringing it up around the body. Seams shall be made by bringing the edges together, folding over twice, and taping down. Polyethylene shall be taped securely in place.

d. Repairs of Polyethylene Encasement: Repair any cuts, tears, punctures, or damage to polyethylene with adhesive tape, or with a short length of polyethylene sheet or a tube cut open, wrapped around the pipe to cover the damaged area, and secured in place.

e. Openings in Polyethylene Encasement: Provide openings for branches, service taps, blow offs, air valves, and similar appurtenances by making an X-shaped cut in the polyethylene and temporarily folding back the fill. After the appurtenance is installed, tape the slack securely to the appurtenance and repair the cut, as well as, any other damaged areas in the polyethylene, with any resulting damaged areas being repaired, as described above.

f. Junctions with Unwrapped Pipe: Where polyethylene-wrapped pipe joins an adjacent pipe that is not wrapped, it shall be extended to cover the adjacent pipe for a distance of at least 3 feet away from the ductile iron pipe. Service lines of heterogeneous metals shall be wrapped with polyethylene or a suitable dielectric tape for a minimum clear distance of 3 feet away from the ductile iron pipe.

It is generally required that all fittings, valve, fire hydrants, service connections, couplings and all other appurtenances in the water distribution system be encased as stated above to preserve their durability. There shall be no exceptions to this encasement when ductile iron pipe is in use for conveyances. All other service taps, repairs and installation mechanisms not covered by this specification shall be in accordance with the manufacturer's guide.

The polyethylene encasement shall have the following markings:

- The lay flat diameter of polyethylene encasement and pipe
- Film thickness
- ANSI/AWWA C105/A21.5
- Flexsol Package and year
- "Warning-Corrosion Protection-Repair and Damage"

- Abs quality evaluation Inc and management system evaluation brand logo, or approved equal.
- ISO 9001 or latest
- Fulton and Flexsol Certification No.

12.03 REACTION BACKING

All tees, dead-ends, valves, reducers, vertical offsets, or fittings deflecting eleven and one-quarter degrees (11¼°) or more on any City water lines shall be provided with adequate thrust force control, in accordance with manufacturer's instructions.

Thrust force control (restraint) shall be by one of the following methods including (1) restrained mechanical joint, including telescoping restrained joint, (2) locking gasket for push-on joints, or (3) concrete thrust blocking. Manufacturer's installation specifications shall be adhered to during installation processes.

For mechanical joint pipe connections, restraint shall be incorporated into the design of the follower gland. Restraint may be by either of the following: (1) The restraining mechanism shall consist of individually activated wedges that increase their resistance to pull-out as pressure or external forces increase. The joint restraint ring and its wedging components shall be made of ductile iron. The restraint shall be EBAA Iron, Inc. Megalug Series 1100, Megaflange Series 2100, or (2) MJ Gripper® Gland by U.S. Pipe, or approved equal. Mechanical joint restraint is required where joint disassembly is required. Mechanical joint restraint is not allowed where joint deflection due to possible soil settlement or displacement is likely. Components shall be designed and installed to promote corrosion resistance. (Radial force retainer glands shall not be allowed due to the potential for puncturing the class of ductile iron pipe allowed for use by the City).

Push-on joint restraint shall be Field Lok® gasket for Tyton Joint® pipe, or approved equal. The use of Field Lok® gasket is not allowed if joint disassembly is required or likely. Push-on joint restraint is required where joint deflection, due to possible soil settlement or displacement, is likely.

Telescoping restrained joint shall be TR FLEX® telescoping sleeve, or approved equal. Telescoping restrained joint may be used in lieu of a mechanical joint sleeve where joint restraint is required, as a closure piece when connecting a new restrained joint pipeline to a new one, to make repairs to an existing restrained joint pipeline, to facilitate the installation of fittings or valves in an existing restrained joint pipeline, or to provide expansion or contraction capability in areas of potential extreme movement or where settling is anticipated.

12.04 CONNECTIONS TO EXISTING MAINS

Hot tap connections to existing mains will be constructed by the City of Woodland Public Works Department at developer's expense. All materials for hot tap connection purposes shall be per City Standards at developer's expense.

Extensions to existing stubbed-out City pipelines may be made by the developer. The City will shut down any upstream valves as necessary. Contractors and developers shall not operate City valves.

Connections to existing mains shall be made following appropriate request and scheduling with the City Public Works Department. Applications for such connections shall be made at least ten (10) working days in advance of anticipated connection for water taps. The contractor shall notify the City at least 48 hours in advance of start of construction.

12.05 TRENCH EXCAVATION AND BACKFILL

See Construction Specifications, Section 8: Trenching, Boring, Backfill and Compaction, and Trenching Standard Details, 0200 series.

12.06 CUTTING PIPE

Ductile Iron Pipe shall be cut with a wheel type cutter or sawed. Cutting with chisels shall not be permitted. After cutting, all loose lining material shall be removed and the external edge of the cut shall be dressed with a file.

PVC Pipe field cuts and connections shall be in accordance with the pipe manufacture's published instructions. The cutting of pipe for inserting valves, fittings, or closure pieces shall be done in a neat and workable manner without damage to the pipe so as to leave a smooth end at right angles to the axis of the pipe. The pipe shall be marked around its entire circumference prior to cutting to assure a square cut. A factory-finished beveled end shall be used as a guide for proper bevel angle and depth of bevel plus the distance to the insertion reference mark. The end shall be beveled using a PVC pipe beveling tool. Sharp edges on the leading edge of the bevel shall be round off with a pocket knife or a file. When installing 8, 10 and 12-inch PVC pipe, mechanical joint or push-on type fittings designed for ductile iron pipe shall be used. When connecting PVC pipe into the bell end of cast iron pipe or into push-on type fittings, the end shall be re-beveled, similar to the bevel on ductile iron pipe. When connecting to mechanical joint fittings, the end of the PVC pipe shall not be beveled.

12.07 PROCESS WATER

City water used for testing, disinfection and flushing of new water line improvements shall be diverted through a double-check valve type backflow prevention assembly. Such device shall be selected from the Department of Health Services current approved list (a new list is

issued annually). Connection to the existing City system requires prior City Engineer approval. Water trucks may be used as a water supply as long as there is no cross connection to the existing system. Fire hydrants may be used in conjunction with a backflow prevention assembly as a means to derive process water. Connection to a fire hydrant for supply requires a current and valid City fire hydrant permit. Contractors shall not contaminate the existing water system. The Contractor shall obtain a fire hydrant permit from the City prior to connecting to an existing fire hydrant. All connections to fire hydrants shall include a shutoff valve.

12.08 TESTING OF MAINS

Testing of Ductile Iron Pipe shall be per applicable sections of AWWA C600 standard for "Installation of Ductile Iron Water Mains and Their Appurtenances". Pressure testing of PVC Pipe shall be in addition to the testing required in these Standards and shall be in accordance with the Handbook of PVC Pipe Design and Construction. Water main testing shall follow trench subgrade completion. Aggregate base placement shall follow water main testing. New mains shall have all air expelled and the main brought up to 150 psi for a period of at least two (2) hours during which time the lines and trenches shall be inspected for evidence of water leaks. Allowable leakage in a section during testing shall not exceed the values given in the following table:

Allowable leakage per 1000 feet of pipeline -- gph								
	Nominal Pipe Diameter, inches							
Avg. Test Pressure, psi	3	4	6	8	10	12	14	16
150	0.28	0.37	0.55	0.74	0.92	1.1	1.3	1.5

NOTE: All service laterals less than 3-inch diameter have no allowable leakage.

Leakage shall be defined as the quantity of water that must be supplied into the newly laid pipe or any valved section thereof to maintain a pressure of at least 145 psi. Test shall be repeated after repair until the system meets the above leakage requirement. Test shall be witnessed by a representative of the City Engineer.

Contractor shall provide the necessary pump and a clean calibrated container for measurement of make-up water required to replace leakage during the 2-hour test. Testing against new or existing valves at end of new line is not acceptable.

At the completion of the pipe installation and prior to curb and gutter, the corrosion engineer shall test any engineered corrosion monitoring system in the presence of the City's inspector. A report shall be submitted to the City showing the test results for review and approval. The report shall include test station locations as called out on the approved plans, appurtenance tested, test results and recommendations for future monitoring and maintenance.

12.09 DISINFECTION OF WATER LINES AND ACCEPTANCE SAMPLING

A. Scope: The Contractor shall furnish all labor, materials, tools, equipment, and laboratory costs necessary to perform testing and disinfection of water lines.

B. Work To Be Accomplished: The work shall include water main disinfection, flushing, and water sample collection and analysis.

A copy of the original bacteria test results shall be provided to the City of Woodland Operation and Maintenance Water Supervisor or other designated City employee prior to any connection to the City's water system.

All water line disinfection and water sampling must be performed by or under the direction of qualified personnel. Qualified personnel include personnel certified by the State of California, Department of Health Services as a Water Treatment Operator, Grade 1, or as a Water Distribution System Operator, Grade 1 or a certified water sampler. A copy of the operator's certification shall be available at the field site. Work may also be completed under the supervision of a registered civil engineer.

After pressure testing and prior to acceptance of the work, the entire pipeline, including all valves, fittings, hydrants, service laterals and other accessories, shall be disinfected in accordance with ANSI/AWWA Standard C651, latest revision, which provides detailed specifications for:

1. Limiting contaminating materials from entering the water mains during construction or repairs. The interiors of all pipes shall be inspected for cleanliness during installation. Trenches shall be kept dry and dewatered as necessary. Watertight plugs shall be installed in all open-end joints whenever the trench is unattended for any length of time. Valve bonnets and other high spots where cleaning by flushing may not be effective due to air pockets shall be pre-cleaned and chlorinated.

2. Removal, by flushing, of contaminating materials that may have entered the water during construction or repairs. Minimum flushing velocity shall be 5 feet/second.

FLOW RATES FOR VARIOUS FLUSHING VELOCITIES	
LINE SIZE, INCHES	**VELOCITY, 5 FT/SEC**
6	440 gpm
8	780 gpm
12	1,760 gpm

Prior to main flushing, the Contractor shall contact the City's Operations & Maintenance Division in order to schedule work to prevent conflicts with routine and daily water service operations.

All mains shall be flushed with potable water after construction is completed and prior to disinfection. The Contractor shall provide a sufficient number of suitable outlets at the end of the lines being disinfected, in addition to those required by the plan, to permit the mains to be adequately flushed their entire length in order to remove all residue and debris before disinfection. The outlets provided shall meet the City's design requirements for fittings. Drainage facilities shall be constructed so that the water lines cannot be contaminated through the flushing outlets.

3. Disinfecting any residual contamination that may remain after cleaning and flushing. After flushing, liquid sodium hypochlorite shall be introduced into the mains to produce a uniform free chlorine residual of approximately 50 parts per million, initially, and 25 parts per million, minimum, after 24 hours. Calcium hypochlorite tablets may be used for the initial disinfection.

After chlorinating, the water shall be flushed from the line at its extremity until the chemical and bacteriological quality of the replacement water is equal to that of the permanent source of City supply. Any chlorine residual remaining during flushing shall be neutralized with an appropriate chemical to eliminate free chlorine residual from entering the final point of discharge which may include sanitary sewer lines or offsite disposal.

Pounds of chemicals required to neutralize various residual chlorine concentrations in 10,000 gallons of water are noted on the following table.

Residual Chlorine Concentration	Sulfur Dioxide (SO_2)	Sodium Bisulfate ($NaHSO_3$)	Sodium Metabisulite ($NA_2S_2O_5$)	Sodium Sulfite (NA_2SO_3)
mg/L	lbs.	lbs.	lbs.	lbs.
1	0.08	0.12	0.11	0.15
2	0.15	0.24	0.22	0.3
10	0.75	1.22	1.12	1.48

[Caution: A substantial excess of dechlorinating chemical also may be harmful to the environment. Care shall be exercised to balance the amount of dechlorinating chemical against the chlorine present. Table from AWWA Standards.]

The Contractor shall keep a suitable chlorine residual testing kit available on-site during the disinfection process.

4. Determine the bacteriological quality of fresh water in the mains after disinfecting the main. After final flushing and before the new water main is connected to the distribution system, two consecutive sets of acceptable samples, taken at least 24 hours apart, shall be collected from the new main. At least one set of samples shall be collected from every 1200 ft of the new water main, plus one set from the end of the line and at least one set from each branch. A standard heterotrophic plate count may be required at the option of the City.

   If results of bacteriologic tests indicate the presence of coliform bacteria, the disinfecting process shall be repeated. Additional flushing without repeat chlorinating shall not be allowed.

   Water samples shall be submitted for bacteriological testing according to "Standard Methods for Examination of Water and Wastewater". Samples may be submitted to the Yolo County Department of Environmental Health Laboratory, 10 Cottonwood Street, Woodland, or to another certified lab, in which case the Contractor shall provide the City with its name, location, and California Department of Health Services ELAP certification number. (Powdered sodium thiosulfate must be included in all sample bottles provided by a laboratory.) The Colilert® method shall be used to achieve 24-hour sample test results. Only after satisfactory completion of tests, shall the water system be placed into service.

12.10 MARKER POSTS

Water main marker posts shall be installed where pipelines are stubbed out into undeveloped areas. Markers shall be weather and UV resistant, blue, and resilient. Markers shall be Rhino Fiber Curve or approved equal.

12.11 WATER WELL ABANDONEMENT AND DESTRUCTION

All work shall be performed in accordance with the City approved Water Well destruction plan. The well owner is responsible for obtaining required permits and filing the "Water Well Driller's Report" (State DWR) upon conclusion of the work.

{Blank Page}

SECTION 13: ELECTRICAL AND TRAFFIC SIGNALS

13.01 GENERAL

The electrical work to be done consists of furnishing all labor, materials, transportation, tools, equipment and appurtenances required for the complete installation of all electrical systems shown on the Plans, and as specified in these Specifications, the Special Provisions, City of Woodland Electrical Code and Section 86 of the **Caltrans** Specifications.

All equipment, materials and supplies shall be new and of current manufacture unless otherwise specified. All equipment shall be complete and in operation to the satisfaction of the City Engineer at the time of acceptance of the work.

All incidental parts which are not shown on the Plans or specified herein and which are necessary to complete the traffic signal and street lighting systems shall be furnished and installed as though such parts where shown on the Plans or specified herein.

13.02 RULES AND REGULATIONS

Electrical equipment furnished shall conform to the standards of the National Electrical Manufacturers Association, the Underwriters' Laboratories, Inc., or the Electronic Industries Association, wherever applicable. All material and work shall conform, where applicable, to the requirements of the California Electrical Code; Title 8, California Administrative Code, Electrical Safety Orders; Rules for Over Head Electrical Line Construction, General Order No. 95 of the Public Utilities Commission; Standards of the American Society for Testing and Materials (ASTM); American National Standards Institute (ANSI); and City of Woodland ordinances governing such types of construction.

All C-10 Electrical contractors shall comply with the California Labor Code 3099-3099.5. Electrical contractors shall have proof of certifications for journeyman electricians and proof of enrollment in a state apprentices program for all apprentices working on the project, upon request from the City Engineer.

13.03 MAINTAINING EXISTING ELECTRICAL FACILITIES

All existing electroliers shall be maintained in operation until replacement electroliers are energized, as directed by the City Engineer.

All traffic signal heads and pedestrian signal heads installed but not operational shall be entirely covered with burlap and securely tied to prevent exposure of signal head face to vehicular or pedestrian traffic.

Where the modification of existing traffic signal intersections may require the temporary shutdown of traffic signals, the contractor shall take all steps necessary to keep traffic signal

intersection downtime to a minimum. The work shall be scheduled so that the downtime of each intersection shall be four (4) hours maximum and shall occur between the hours of 9:00 a.m. and 3:00 p.m. The Contractor shall notify the City Engineer five (5) working days prior to any planned traffic signal intersection shutdowns.

13.04 FOUNDATIONS

Foundations for posts, standards, pedestals, and other appurtenances shall comply with the concrete specifications of Section 6, Construction Specifications.

Foundations for standards shall be poured monolithically. The bottom of the standard shall be one to two inches above the top of the foundation. Grout shall be placed from the top of the foundation to the bottom of the standard. The exposed portion of the foundation shall be formed to present a neat appearance. Tops of foundations for posts and standards, except special foundation, shall be finished to curb or sidewalk grade as shown on the Plan or as directed by the City Engineer.

When a foundation is to be abandoned in place, the top of foundation, anchor bolts and conduits shall be removed to a depth of six inches (6") below the surface of sidewalk or unimproved ground. The resulting hole shall be backfilled with material equivalent to the surrounding material.

13.05 EXCAVATING AND BACKFILLING

The excavations required for the installation of conduit, foundations, and other appurtenances shall be performed in such a manner as to cause the least possible injury to the streets, sidewalks and other improvements. All lawns or improvements disturbed in excavating shall be replaced or reconstructed with the same kind of material as found on the work or with materials of equal quality. The trenches shall not be excavated wider than necessary for the proper installation of the electrical appurtenances and foundations. Excavating shall not be performed until immediately before installation of conduit and other appliances.

The material from the excavation shall be placed in a position that will not cause damage or obstruction to vehicular and pedestrian traffic nor interfere with surface drainage.

Permission to cut or disturb the pavement in any street must be obtained from the City Engineer. The removal of existing pavement and concrete walks or driveways shall be by sawing the edges of the areas to be removed to a minimum depth of one and one-half inches (1½") and digging out the old pavement or concrete. Whenever a part of a square or slab of existing concrete sidewalk or driveway is broken or damaged, the entire square or slab shall be removed and replaced.

Backfill material shall be placed in six inch (6") layers. Each layer of backfill shall be moistened and thoroughly tamped, rolled or otherwise compacted until the relative

compaction is not less than ninety-five percent (95%). Compacting of backfill material by pounding or jetting will not be permitted.

Immediately following the completion of backfill at each location where pavement was cut, the Contractor shall place the necessary temporary surfacing and follow up with the permanent paving at the expense of the Contractor. The reconstruction of the concrete walks and driveways shall be as specified in Section 6 of these Specifications. The type of concrete used and its color shall match the adjacent concrete construction. The cost of said concrete work will be at the expense of the Contractor. Concrete sidewalks shall have a minimum thickness of four inches (4") and the minimum thickness of concrete driveways shall be six inches (6").

All surplus excavated material shall be removed and disposed of within forty-eight (48) hours by the Contractor. All sidewalks and gutters shall be swept clean.

13.06 CONDUITS

Conduits shall be either mild steel, rigid, hot dipped galvanized or Schedule 40 polyvinyl chloride (PVC). The same type of conduit shall be used for the entire system.

A. Requirements for Mild Steel, Rigid Conduit: The rigid steel conduit shall be thoroughly cleaned and all burrs removed. The use of thin-wall conduit is specifically prohibited for underground installation.

Exterior and interior surfaces of all conduit and fittings shall be uniformly and adequately zinc coated by the hot-dipped galvanizing process. The interior and exterior of a six inch (6") sample cut from the center of a standard length of conduit when tested shall not show a fixed deposit of copper after four, one-minute immersions in the standard copper sulfate solution.

The interior of the conduit shall have a continuous coating of lacquer or enamel. Each length shall bear the label of Underwriters' Laboratories, Inc. Installation shall conform to appropriate articles of the Code.

Rigid steel conduits shall be not less than two inches (2") in diameter. Contractors, at their own expense and discretion, may be allowed to use larger size conduit, upon request. Where larger size conduit is used, it shall be for the entire length of the run from outlet to outlet. No reducing couplings shall be permitted in any run. All conduit bends, except factory bends, shall have a radius of not less than six (6) times the inside diameter of the conduit. Where factory bends are not used, conduit shall be bent, with approved hydraulic bender, without crimping or flattening, using the longest radius practicable. All conduit ends shall be sealed with a slip on cap until wiring is started. When caps are removed, conduit ends shall be provided with approved conduit bushings.

Conduit stubs, caps, exposed threads and all standard screw joints shall be painted with zinc rich paint or an equal rust preventative paint.

All mild steel, rigid conduits, where exposed to a corrosive environment, must be OCAL. All conduit openings mild steel, rigid and PVC whether used or spare must be identified and sealed with duct seal.

B. Requirements for Schedule 40 Polyvinyl Chloride Conduit: Polyvinyl Chloride conduit (PVC) shall be ninety degrees (90°) C rated and listed by Underwriters' Laboratories. Conduit shall conform to NEMA Standards and be in conformance with Article 347 of the California Electrical Code. Conduit, fittings and cement shall be produced by the same manufacturer, who shall have at least five (5) years experience manufacturing the product. Material shall have a minimum tensile strength of 7,000 psi at 73.4°F; flexural strength of at least 11,000 psi and a minimum compressive strength of 8,600 psi. All joints shall be solvent welded in accordance with the manufacturer's recommendations.

All PVC conduits shall be not less than two inches (2") in diameter. Contractors, at their own expense and discretion, may be allowed to use larger size conduit, upon request. Where larger size conduit is used, it shall be for the entire length of the run. All conduit ends shall be sealed with a slip on cap until wiring is started. The slip on cap shall have a slot large enough for a pull rope. Unless otherwise specified, all PVC conduits shall contain one No. 10 green ground conductor.

C. Conduit Installation: The installation of conduit in lawn areas shall be by approved boring method or by trenching. If trenching is used, Contractor shall first remove the sod prior to trenching. The removal of sod over jack holes or over trenches shall be done by a sod cutting machine. Removal of sod by other means shall not be accepted. Each strip of sod removed shall be rolled into a neat roll without damage. All sod removed shall be replaced within forty-eight (48) hours. The installation of conduits in paved streets shall be by approved jacking, drilling or trenching methods.

When installed under sidewalk, conduit shall be laid to a depth of not less than eighteen inches (18") below sidewalk grade. In all other areas, conduit shall be laid to a depth of not less than twenty-four inches (24") below the finished grade.

Conduit runs to be located under street pavement shall be installed within a minimum of twelve inches (12") and a maximum of eighteen inches (18") from and parallel to the lip of gutter, by using the "Trenching Installation of Conduit in Paved Streets" method. Installation of additional conduits at street intersections may be required, at the discretion of the City Engineer, to support known and

potential future telecom requirements. All pull boxes shall be located behind sidewalks unless otherwise noted on the Plans.

When a conduit is shown on the Plans as lying in a straight line parallel to the curb line, sidewalk, or pavement edge, it shall not deviate more than six inches (6") to either side of that parallel line.

In order to verify that conduit is laid to the correct depth and in as straight a line as possible, the Contractor shall as the minimum, leave conduit exposed at a spacing of not over seventy-five feet (75') and no such exposure shall be backfilled until approved by the City Engineer.

The bending of PVC conduit shall be by a hot box bender, and in lieu of jacking or boring, PVC conduit shall be installed by the drill rod method in which a drill rod is first installed and the PVC is pulled into the cavity made by the drilling rod as the rod is removed. At locations where conduit is not installed by the said trenching method, the conduit shall be installed by the drill rod method.

Before any wire is pulled in the conduit system, all conduits shall be swabbed out to remove any foreign material that is in the conduit. The removal of foreign material from the conduit with compressed air is acceptable. **A pull rope and one bare copper conductor shall be installed in all empty conduits.**

Conduit entering controller or service cabinets shall be sealed to prevent the entrance of gases by the use of paraffin or other sealing compound approved by the City Engineer.

Five inch (5") conduit nipples shall be attached by use of a coupling to any conduit run which terminates inside signal standards. Top of nipple shall be two inches (2") above the finished grade of the signal standard foundation.

D. Trenching Installation of Conduit in Paved Streets: Conduit shall be placed under existing pavement in a trench approximately two inches (2") wider than the outside diameter of the conduit to be installed. Trench shall not exceed six inches (6") in width. Conduit depth shall not generally exceed twelve inches (12") or conduit trade diameter plus ten inches (10"), whichever is greater, except that at pull boxes the trench may be hand dug to a required depth. The top of the installed conduit shall be a minimum of nine inches (9") below finish grade.

The outline of all areas of pavement to be removed shall be cut to a minimum depth of three inches (3") with an abrasive type saw or with a rock cutting excavator specifically designed for this purpose. Cuts shall be neat and true with no shatter outside the removal area.

The trenching machine shall be shielded to prevent loose material from being thrown away from the machine. Loose material deposited on the pavement behind the cutting machine shall be removed from the pavement immediately and the pavement cleared to allow the passage of traffic. Only those traffic lanes occupied by the cutting machine and the cleanup operation shall be closed and they shall be opened as soon as the work has moved sufficiently to clear them.

The conduit shall be placed in the bottom of the trench and the trench shall be backfilled with commercial quality concrete containing not less than 590 pounds of cementitious material per cubic yard to not less than 0.10 foot below the pavement surface. The concrete shall be tamped or vibrated to provide a dense material free from excessive voids and rock pockets.

The top 0.10 foot shall be backfilled with **HMA** produced from commercial quality paving asphalt and aggregates, and approved by the City Engineer.

Spreading and compacting of **HMA** shall be performed by any method which will produce an **HMA** surfacing of uniform smoothness, texture, and density.

Excavation, installation of conduit and concrete backfill shall be completed within the same working day. **HMA placement** shall be completed within twenty-four (24) hours after excavation off trench.

Upon completion of all contract work, the trenches cut through existing pavement will be inspected and, if found necessary by the City Engineer, they will be brought to grade with an appropriate asphaltic concrete mix. In addition to bringing the trenches to grade, the City Engineer may require a twelve inch (12") wide sand seal centered over the trench pavement or between the trench pavement.

13.07 PULL BOXES

Pull boxes shall be installed behind the sidewalk at the locations shown on the Plans, or at locations designated by the City Engineer at site of work. As a minimum, pull boxes shall be located where two or more conduits intersect, at critical angle points, street crossings, and adjacent to the bases of all street lights poles. The distance between pull boxes shall not exceed 175 feet. Contractor may, at own expense, install such additional pull boxes as may be desired to facilitate the work.

For signal systems, or combined signal and low voltage lighting systems, reinforced concrete covers shall be inscribed "Traffic Signals" and for lighting systems, reinforced concrete covers shall be inscribed "Street Lighting". ("High Voltage" where applicable). If pull boxes are set in an area subject to vehicle traffic load they shall have a steel cover of suitable design to withstand such loads. The lid inscriptions shall be in conformance with Caltrans Standard Plan ES-8.

The bottom of all concrete boxes shall be left open and at least twelve inches (12") of crushed rock shall be placed below the box for drainage as shown on Plans or as directed by the City Engineer. The crushed rock shall be installed prior to the installation of the conductors.

Unless otherwise noted on the plans, all pull boxes containing three or less street lighting conduits shall be Caltrans Standard No. 3½ size. A Caltrans Standard No. 5 pull box shall be used for all pull boxes containing either traffic signal conduit or four or more conduits, unless otherwise noted on the plans.

Pull box extension shall be furnished and installed where called for on the Plan. Where a pull box extension is to be installed over the ends of existing conduits, the conduit ends shall be raised or lowered so they will be a minimum of five inches (5") and a maximum of seven inches (7") below the underside of the pull box cover.

13.08 CONDUCTORS

Unless otherwise specified, conductors shall be single conductor, solid or stranded copper of the gauge shown on the Plans. Wire sizes shall be based on American Wire Gauge (AWG). Copper wire shall conform to the applicable portions of ASTM Designations B3 and B8. Contractor shall use color coded wires, using a different color for each circuit with continuous color maintained throughout each circuit. Color coding shall be as required by the City Engineer or as detailed on the Plans or Special Provisions. Where permitted by the City Engineer, conductor of the same color may be used on different circuits. These conductors shall be identified with approved tags.

Traffic signal and multiple circuit lighting conductors shall be rated for 600 volt operation. Unless otherwise specified, the insulation for the conductors shall be Type THW or Type THWN.

All traffic signal loop wire splices to the home run must be hot dipped in solder, then three (3) layers of electrical rubber tape applied. Two layers of PVC tape must be applied over the rubber tape. The whole splice must them be covered with **Liquid Tape® or approved equivalent**.

13.09 PULLING WIRES

Pulling wires shall be done with special care to preclude injury to the insulation. Hand power only shall be employed in pulling wire. A UL or ETL listed inert lubricant shall be used in placing conductors in conduit.

Wires shall not be drawn into underground conduit until **poles and cabinets or other permanent facilities** have been delivered and **are** ready for erection.

13.10 BONDING AND GROUNDING

All metal conduit systems, standards, pedestals, ballast and transformer cases, service equipment, anchor bolts, etc., shall be made mechanically and electrically secure to form a continuous system and shall be effectively grounded. Grounding shall be in accordance with all applicable codes and regulations. Bonding and grounding jumpers shall be copper wire or copper strap with a minimum cross sectional area equivalent to a No. 8 AWG.

Splices in ground wires shall be made with UL or ETL approved compression connectors.

Bonding wire or strap shall be secured to the lower section of metal standard by brass or bronze bolts three-sixteenths inch (3/16") or larger.

In conduit systems where rigid steel conduit and PVC conduits are mixed, the following requirements apply:

A. The rigid steel conduit shall have an approved grounding bushing installed at the conduit end(s).

B. The grounding conductors in the PVC conduit shall be attached to a grounding bushing which shall be attached to the rigid steel conduit.

If there is no rigid steel conduit, the grounding conductors must be attached to the 5/8" x 8' copper ground rod. (See Detail #0915).

13.11 ELECTRIC SERVICE AND TRAFFIC SIGNAL CONTROLLER

The locations of service points shown on the Plans are approximate only. Contractor shall coordinate to determine the precise locations from PG&E. Service conduits, service conductors, service grounds, metering and transformer pads where required shall be installed in accordance with PG&E requirements. Service equipment and enclosure shall be furnished and installed as detailed on the Plans or specified in the Special Provisions.

Service enclosure shall meet the following requirements:

A. <u>Signal Hardware</u>

Service pedestal:	Type III-AF; See Caltrans Std. Plan ES-2D
PG&E Service:	120/240 volt, single phase
Cabinet:	Type 332 Anodized aluminum, with 210 conflict monitor (monitor reds)

Controller:	Type 170E with 68HC11 CHIP with Comm port on front panel
PROM board:	412-F System Memory module with 27C1001 EPROM and full complement of RAM
Software:	Bi-Tran Systems program # H200CA
Other components:	Detector units- Model 222 only
LED Signal Heads:	LED signal heads are required for all new red vehicular and pedestrian signal indications.

B. Battery Backup System:

- The Battery Backup System shall be Tesco Traffic 27-22BBS by Tesco Controls, Inc. or approved equal.
- Pedestal shall be of anodized 1/8" aluminum.
- System shall include a Generator Transfer switch with BBS bypass and 30-amp external reverse service plug.

C. Audible Pedestrian Signals:

- Audible signal shall be Caltrans approved model DS100 Series by Novax Industries Corporation, or approved equal.
- Audible signal shall have Button Actuated Timer and timer shall be set to 4 seconds.

Signal Hardware

Enclosure Type:	Extruded, ruggedized
Number of Sounds:	Dual Sound
Sound Level Adjust:	Internal adjustment
Sound Inhibit Voltage:	24 VDC interface
Sound program:	Chirp/Cuckoo
Color:	Hunter Green

13.12 SERVICE PANELS

Service Panels shall be as called for on the Plans. Each circuit breaker shall be permanently marked with its trip rating. Multi-pole breakers shall be common trip with a single handle. Unless otherwise specified, each circuit breaker shall be equipped with a device for

padlocking the breaker in the "on" or "off" position. Panelboards shall be equipped with copper bus bars with sizes based on a current carrying capacity of not over one thousand (1,000) amperes per square inch of cross section.

Unless otherwise specified, enclosures of panel board shall be Anodized Aluminum.

13.13 STANDARDS

The locations of standards for traffic signals and street lights shown on the Plan are approximate only. The exact location of each standard will be determined by the Engineer prior to installation.

Each standard shall be anchored to the concrete foundation by galvanized steel anchor bolts, nuts, leveling nuts and washers in accordance with the Plans and the standards shall be installed in a true vertical position.

13.14 TRAFFIC SIGNAL CONTROLLER

Contractor shall deliver the traffic signal controller and cabinet to the City of Woodland Municipal Services Center at 655 N. Pioneer Avenue in the City of Woodland a minimum of two (2) weeks in advance of any required field inspection of equipment or installation.

13.15 TRAFFIC SIGNAL EQUIPMENT FUNCTIONAL TEST

Prior to requesting final inspection for signal equipment, the Contractor shall perform the following functional tests in the presence of the City Engineer representative:

A. The continuity and ground of each circuit shall be tested.

B. All 120 volt vehicular and pedestrian indications shall individually be turned on momentarily and proper operation and phasing shall be checked.

C. All 24 volt pedestrian/bike push buttons conductors shall be checked for continuity to verify phase locations and conductor integrity.

D. All pushbuttons and detectors shall be checked for proper operation and phasing.

E. All vehicular and pedestrian signal heads shall be properly adjusted and covered.

F. All vehicular and pedestrian signal heads shall individually be momentarily illuminated to verify proper operation and phasing.

G. All inductive loop's and related DLC's shall have an insulation test performed. The conductors shall have a minimum of 200 Meg ohms at 500 volts for one minute.

H. All inductive loop's and related DLC's shall have a frequency test preformed. The frequency shall not fall outside the range of 15 - 85 Khz.

I. Check primary Ground for proper resistance. Ground shall not exceed current NEC requirements.

J. Contractor shall verify continuity on DLC's and loop connections.

K. Unoccupied and occupied frequency of the loop must fall within the vehicle detector maximum sensitivity range.

L. Street lights must be illuminated for a minimum of seven (7) continuous days.

If any system component or circuit does not operate properly, it shall be repaired by the contractor and re-inspected by the City Engineer representative. After the successful completion of all tests, the Contractor shall request through the City Engineer, final inspection by Traffic Signal Maintenance representatives.

13.16 SIGNAL CONTROLLER INSTALLATION AND INTERSECTION TURN-ON

After the successful final inspection of the equipment functional test, a traffic signal controller installation and intersection turn-on date may be requested. Contractor shall give the Engineer a minimum five (5) working days notice of the requested date and the schedule shall be subject to the approval of the City Engineer.

Traffic signal controller installation and intersection turn-on shall occur only between the hours of 9:00 a.m. and 2:00 p.m. and only on Tuesday, Wednesday or Thursday of weeks with no scheduled holidays. Controller installation and intersection turn-on may not occur the Thursday before a Monday holiday.

Contractor shall provide changeable message signs announcing the turn-on date a minimum of seven (7) calendar days prior to intersection turn-on.

Traffic signal controller installation and intersection turn-on shall be completed by the Contractor in conjunction with the service engineer of the controller manufacturer and the service technician from the microloop manufacturer, in the presence of the City Engineer and Traffic Signal Maintenance representatives.

If in the opinion of the City Engineer the Contractor has not provided sufficient personnel and equipment for the timely completion of the traffic signal controller installation and intersection turn-on, work may be postponed until such time as sufficient personnel and equipment are provided.

Signal controller installation and intersection turn-on includes satisfactory signal system operation for a minimum continuous period of five (5) working days. During the test period, the Contractor and the authorized service engineer of the controller manufacturer and the service technician from the microloop manufacturer shall be available at the job site within four (4) hours after notification to correct any malfunction which might develop in the signal system.

13.17 INSPECTION

In order to facilitate inspection by the City Engineer, Contractor must observe the following procedure:

A. Prior to final electrical inspection, Contractor must ascertain that:

1. All standards are tightly secured.
2. All standards are true.
3. All standards are grounded with copper ground wire or strap with brass bolts and washers.
4. All conduit studs are bonded.
5. All exposed threads are painted.
6. All splices are taped and insulated in accordance with these Specifications.
7. Circuits are tagged with metal tags where required.

B. Concrete pull box covers shall be protected during construction. Damaged covers shall be replaced with new covers by the Contractor.

13.18 SALVAGE

All salvageable material and equipment removed from present installations which are not to be re-installed shall be delivered to the Municipal Service Center at 655 North Pioneer Avenue, Woodland, California.

The Contractor shall remove all signal heads, mounting brackets, luminaires, mast arms and appurtenances from all salvaged traffic signal and street lighting standards prior to delivery to the Municipal Service Center.

The Contractor shall provide for the safe transfer with no damage to the salvaged equipment. Any equipment broken or lost by the Contractor shall be replaced with equipment of equal quality at the expense of the Contractor.

13.19 LED SIGNAL INDICATIONS

Unless otherwise indicated, all new red, yellow, and green traffic signal indications shall be the light emitting diode type and shall conform to the most recent **Caltrans** specification**.** All purchases shall be from vendors and models listed on the Caltrans Qualified Product List, or approved equal.

13.20 MICROLOOP DETECTORS

Systems shall be Global Traffic Technologies Canoga Non-Invasive microloop vehicle detection system model 702 with 900 Series Monitoring Card with model 30003 home-run lead-in cable or an approved equal system. **Installation shall comply with Caltrans Standard Plan ES-5C.**

Contractor shall contract with authorized dealer for proper microloop installation, turn-on support and verification.

13.21 STREET LIGHTS

Mast Arm mounted lights ("Cobra") shall be Light Emitting Diode meeting the provisions of Section 24, LED Street Lights.

Post-top mounted lights shall be High Pressure Sodium.

{Blank Page}

SECTION 14: UNIFORM STANDARD FOR INSTALLATION OF SIGNS

14.01 DESCRIPTION

This work shall consist of the uniform installation of traffic control and street name signs. Materials and installation shall comply with the current Manual on Uniform Traffic Control Devices as modified for use in California.

14.02 MATERIALS

A. Sign Blanks: All signs shall be 0.080 gauge, new, non-recycled aluminum.

B. Mounting Hardware: All brackets, banding, buckles, nuts, washers and bolts must be stainless steel. (When fastening signs to brackets, use plastic or fiber washers in between the flat washer and sign face to prevent damage to sign sheeting.) Damaged sheeting due to improper installation is not acceptable

C. Sign Poles: Use 2" diameter, Schedule 40, threaded galvanized steel pipe for standard installations. Breakaway posts shall be Unistrut telespar, 12 gauge, 2"x2" post or Western Highway Ulti-Mate, 12 gauge, 2" x 2" signposts. Other types of materials may only be used with prior approval.

D. Street Name Signs: 9" vertical dimension, length varies based upon the street name; minimum 24" length to maximum 48" length in 6" increments. Lettering shall be white Series "D" with minimum spacing of ½". Street name lettering shall be 6" uppercase and 4½" lowercase and street suffix lettering shall be 3" uppercase. In cases where the length of the street name is too long for a 48" sign plate, lettering may be narrowed to fit with prior City approval..

E. Cross-Bracing: All 30" signs and wider (except for R1 and W47 signs) shall be cross-braced per City standards.

1. Bracing shall be *SignFix* aluminum extrusion.
2. Extrusion shall be applied to sign with 1" wide 3M VHB double-sided tape.
3. Signs and extrusion must be cleaned per manufacturer's specifications and tape applied per 3M's specifications.
4. When mounting signs with *SignFix* extrusion to poles, appropriate *SignFix* hardware must be used.
   a. #SX0220 Universal Channel clamps shall be used to mount extrusion to 2" round poles and larger light poles.
   b. #SX0061 2"x2" RHS Clamps shall be used on 2" breakaway posts.

F. Sign retroreflectivity: comply with following standards

1. Use Type III High Intensity Prismatic reflective sheeting, lettering and symbols unless otherwise specified.

2. All overhead mast arm-mounted street name signs and all advanced street name signs shall use 3M V.I.P. Diamond grade reflective sheeting.

3. All new warning signs for school, pedestrian, and bicycle crossings shall use 3M's fluorescent yellow green V.I.P. diamond grade (3983) reflective sheeting.

G. Graffiti Resistance: All signs shall use 3M's 1160 graffiti-resistant overlay film or approved equal.

14.03 INSTALLATION

A. Sign Height: Traffic control signs shall be mounted between 7'-0" and 7'-2" above the existing grade. Street name signs shall be mounted between 9'-0" and 10'-5" above existing grade.

B. Center Mounted Signs: Mount with Band-it brand brackets (#D001) using 0.030 thickness 5/8" Band-it banding tape (#C205). Band-it brand 5/8" buckles (#C255) shall be used to secure banding tape.

C. Flag Mounted Signs: Signs that are 18" x 18" or smaller use two Band-it L-mount brackets (Model #D007) per strap.

Brackets for signs larger than 18" x 18" shall be approved by the City Engineer prior to use.

To flag mount 12" x 18" signs, the hole pattern for Band-it L-mount brackets (Model #D007) must match the City specs. Contact City Staff for more information.

D. Street Name Signs:

1. When flag mounted on street light or signal poles, sign shall be one (1) double faced 0.080 aluminum plate.

   a. Signs 36" long or less, use a 10X10 mounting bracket.

   b. Signs longer than 36", use Band-it cantilever angle arm #SX0360 (See Detail 1420).

2. When mounted on 2"galvanized pole above stop signs shall be mounted with Style #556 4-way bracket assembly with aluminum cap and separators and finial as manufactured by Western Highway, or approved equal. (See Detail 1425).

E. New Sign on New Sign Pole: All new sign and post installations shall conform to standard Detail Series 1400 and these specifications

F. New Sign on Existing Sign Pole: If the existing pole is 2" galvanized pipe, it shall be threaded to accommodate an additional length of 2" galvanized steel pipe (Sch. 40) which shall be attached to the existing pole with a 2" galvanized steel pipe coupling.

If the existing pole is breakaway then a coupling sleeve shall be used. The extension shall not extend above the top of the new sign. There shall be approximately ½" to 1" spacing between signs.

G. New Sign on New or Existing Street Light or Signal Poles: The sign shall be flag-mounted and shall not cover existing street light numbers. Signs shall be mounted in compliance with Standard Drawing Series 1400.

When mounting 12 x 18 No Parking signs, the hole pattern must be as shown in Detail 1430.

14.04 INSTALLATION OF TYPE G-7 MASTARM MOUNTED STREET NAME SIGNS

Installation of type G-7 Mast arm mounted street name signs. All signs shall have a 2" x 2" x .125" Aluminum angle stiffener attached to the top edge of the sign. The stiffener shall be attached to the sign with two strips of 1" 3M VHB double-sided tape. The stiffening angle shall be mounted on the side of the sign that does not face oncoming traffic. The angle shall be 1' less that the length of the sign and centered along the top of the sign horizontally to leave not more than six inches on either end of the sign unsupported.

Mounting brackets shall be Hawkins adjustable swing arm brackets (250 series) with springs. Acceptable models are M10J-OCB250AL(S) and M10J-OCB250FL(S). Signs shall be mounted using two brackets per sign on the same side of sign as the aluminum stiffening bracket and shall be mounted 6"-12" in from each end of the sign. Materials shall only be affixed with manufacturer supplied stainless steel hardware. In cases where an extension is needed the contractor shall use Hawkins 250 series extensors.

Brackets shall be mounted to the mast arm using two straps of Band-it tape per bracket with one buckle per band. The banding tape shall be type 201 stainless steel .625" width and .030" thickness. Buckles shall be Band-it type 201 stainless steel .625" width.

See Standard Detail 1438.

{Blank Page}

SECTION 15: BUS SHELTERS

15.01 GENERAL

Contact Yolo County Transportation District for bus shelter standards and specifications.

{Blank Page}

SECTION 16: TRAFFIC STRIPING, MARKINGS, LEGENDS AND ADDRESS NUMBERS

16.01 DESCRIPTION

All traffic striping, legends and marking material and method of placement shall conform to Section 84 and 85 of the California Standard Specifications, to the current Manual on Uniform Traffic Control Devices as modified for use in California and to and these Specifications.

All striping, markings, and legends shall be thermoplastic unless otherwise approved in writing by the City Engineer.

16.02 THERMOPLASTIC

A. All thermoplastic shall be Alkyd Thermoplastic, as manufactured by Pave-Mark Corporation or approved equal.

B. All thermoplastic material for traffic stripes shall be applied at a minimum thickness of 0.080 inches and shall be inspected at time of application.

C. All thermoplastic material for legends and markings shall be applied at the minimum thickness of 0.125 inches and shall be inspected at time of application.

D. All surfaces older than three (3) months, concrete surfaces, or where traffic has traveled on the surface shall be primed per the manufacturer's specifications prior to placement of the thermoplastic.

E. Primer shall be compatible with the Alkyd Thermoplastic.

16.03 PAINT

A. Paint to be used only with prior written approval from the City Engineer.

B. All paint for new installation of striping, markings and legends shall be applied at the minimum of two (2) full coats. First coat shall be dry prior to application of the second coat.

C. All striping, markings and legends to receive paint shall be spray painted. Brushes and rollers shall not be allowed without prior City Engineer approval.

D. If directed by the City Engineer, a primer shall be applied prior to the application of the final two coats of paint.

E. The primer shall be compatible with the paint and applied per the manufacturer's specifications.

F. All paint shall be the following brands, or approved equal:

1. *Curb Paint.*

COLOR	TYPE	BRAND
White	Latex	Morton International, Ameritone, Colorama
Green, Blue	Vinyl-Epoxy	Dunn Edwards, Morton
Red	Acrylic	Colorama, Morton

2. *Stencil Paint.*

COLOR	TYPE	BRAND
Black, white	Enamel	Krylon (Premium)
White	Alkyd	Aervoe-Pacific

16.04 PAVEMENT MARKERS

A. Pavement markers shall not be placed in pavement recesses.

B. Hot melt bitumen adhesive shall be used to cement the pavement markers to the surface. Rapid set type epoxy adhesive shall not be used, without prior written approval of City Engineer.

C. Hot melt bitumen adhesive shall be heated indirectly in an applicator with continuous agitation and shall be applied at a temperature between 400 and 425 degrees. Pavement markers shall be placed immediately and sealed evenly on the surface of the street.

D. All non-reflective markers shall be polypropylene Diamondback brand, or approved equal.

E. Pavement markers shall have a minimum of 1/8" bead seal around the marker.

16.05 REMOVAL OF STRIPING, LEGENDS AND MARKINGS

A. All traffic striping, legends and markings shall be removed completely by grinding or sandblasting. The maximum pavement scoring depth shall be 1/8". Final area of removal shall be in the shape of a square or rectangle. The removal marks shall not be the same shape as the legend or marking being removed.

B. All areas of the street that have been damaged by grinding or sandblasting as a result of striping, legend or marking removal, shall receive a minimum of one (1) coat of asphalt seal coat.

16.06 ADDRESS NUMBERS

A. Address numbers shall be painted on the face of curb two feet (2') from the edge of the driveway flare on the side of the driveway near the center of the lot.

B. All numbers shall be four inches (4") in height.

C. All numbers shall be painted with two (2) coats of black paint. The first coat shall be dry prior to the application of the second coat of paint.

D. All numbers shall be painted on a rectangular white background six inches (6") in height. The white background shall consist of two (2) coats of white paint. The first coat shall be dry prior to the application of the second coat of paint.

F. All address numbers shall be applied as per City Detail No. 0375.

{Blank Page}

SECTION 17: FENCING

17.01 GENERAL

All chain link fence and gates shall conform to the requirements as set forth in the Caltrans Standard Specifications, except as herein modified.

A. The height, dimension, and layout of the fence will be as shown on the Plans approved by the City Engineer.

B. Chain link fence fabric shall meet the requirements of zinc-coated steel chain link fence fabric, ASTM Designation A392 with Class 1 zinc coating. Unless otherwise indicated on the Plans or as approved by the Engineer, the fabric shall be a two inch (2") mesh of nine (9) gauge wire, with a minimum breaking strength of twelve hundred and ninety (1,290) pounds.

No loose ends of the fabric along top, bottom or edges shall be allowed. All loose ends must be knuckle to knuckle tied. Any other type of connection must be approved by the City Engineer.

C. The base material for the manufacture of steel pipe used for posts, braces, rails and gated frames shall be commercial quality, or better, weldable steel, conforming to the specifications of ASTM Designation A120. At the option of the Contractor and upon approval of the Engineer, high-strength tubing fabricated by cold rolling and radio frequency welding from steel conforming to ASTM Designation A446, Grade D, may be used provided that the product of the yield strength and the section modulus shall not be less than that of pipe conforming to ASTM Designation A120. The base material for the manufacture of other steel sections used for posts and braces shall conform to ASTM Designation A572, Grade 45, with minimum yield strength of forty thousand pounds per square inch (40,000 psi). All posts, braces, rails and gate frames shall be hot dipped galvanized in accordance with ASTM Designation A123, or ASTM Designation A525, Coating Designation G235 plus chromate conversion coating and 0.4 mils minimum thickness finish coat of clear, cross-linked acrylic.

D. Posts and rails shall be as specified below, unless otherwise indicated on the Plans and approved by the City Engineer. The Contractor shall have the option of section types to be used with the condition that the option exercised shall be uniform throughout the project.

FENCE MEMBER	DIMENSION O.D.	SECTION TYPE	MINIMAL WEIGHT (LBS)/LINEAL FT
Line Posts	1.875"	C-Section	2.15
	2.375"	Sch. 40 pipe	3.65
	2.375"	Hi-strength tubing	3.12
Terminal, Corner,	2.875"	Sch. 40 pipe	5.79
Latch Posts	2.875"	Hi-strength tubing	4.64
Horizontal, Diagonal	1.825"	C-Section	1.35
Braces, Top Rails,	1.660"	Sch. 40 pipe	2.27
Bottom Rails	1.660"	Hi-strength tubing	1.82
Gate Posts with Gate Width of:			
Up through 6'	2.875"	Sch. 40 pipe	5.79
	2.875"	Hi-strength tubing	4.64
Over 6' through 12'	4.500"	Sch. 40 pipe	10.79
	4.500"	Hi-strength tubing	4.64
Over 12' through 18'	5.563"	Sch. 40 pipe	14.62
Over 18' through 24' max.	6.625"	Sch. 40 pipe	18.97

E. Fittings shall be hot-dip galvanized and be malleable cast iron, or pressed steel.

F. Fabric shall be fastened to line posts with fabric bands spaced approximately fourteen inches (14") apart and to top rail and bottom tension wire with nine (9) gauge galvanized tie wires spaced approximately twenty-four inches (24") apart.

G. Unless otherwise shown and noted on the approved plans, all fence installations shall be constructed with a top rail, and a bottom tension wire.

H. A Certificate of Compliance shall be furnished to the Engineer prior to the installation of any chain link fencing, gates, or other components stating that the steel and protective coatings comply with the above requirements. Said Certification shall be in accordance with the provisions of the **Caltrans** Specifications Section on "Certificates of Compliance".

17.02 CONSTRUCTING FENCE

Chain link fence shall be constructed as shown on the Plans and a height therein specified. The line of the fence shall be cleared of all obstructions and surface irregularities and the bottom of the fence shall be to uniform grade as may be established by the Engineer. The

posts shall be spaced not more than ten feet (10') apart and at points specifically shown on the Plans. Terminal posts and gate posts shall be set thirty-six inches (36") in concrete bases. Line posts shall be set thirty inches (30") in concrete bases. Concrete shall be class "C" as set forth in these Specifications. Concrete bases for terminal, gate and line posts shall be allowed to cure for not less than seven (7) days before wire fabric is placed. Concrete bases on line posts shall cure no less than seven (7) days before wire fabric is placed. Stretcher bar and truss bands shall be spread and slipped on end, corner, pull, brace, and gate posts before installation of top rails. Extension joints shall be provided for rails at intervals of one hundred feet (100'). Bottom tension wire shall be seven (7) gauge galvanized coil spring steel.

The placing of the rails, braces, and the wire fabric shall be accomplished in such a manner that the finished fence shall be taut, true, and of precise workmanship throughout. The fabric shall be stretched so that no slack sections remain at any point. The fabric shall be securely tied to posts and rails in a manner so that the fabric will remain tight and immovable. Gates shall be so set that they are true and will swing freely in the direction indicated on the Plans.

17.03 REDWOOD SLATS

When shown or specified on the Plans, chain link fence shall be constructed with redwood slats. The slats shall be inserted vertically into each mesh of the wire fabric. The slats shall be fastened in position by the weaving machine which shall produce a bow knuckle at both ends of the slats. No staples in the slats are permitted. The slats shall be stained with a high quality stain to provide a permanent red color background.

17.04 TEMPORARY CONSTRUCTION FENCING

All temporary construction fencing shall be chain link. Any other type of temporary construction fencing shall require prior written approval by the City Engineer.

{Blank Page}

SECTION 18: CLEANING AND CLOSED-CIRCUIT TELEVISION INSPECTION OF SANITARY SEWER AND STORM DRAIN PIPELINES

18.01 OBJECTIVE

These specifications define the minimum requirements for the preparatory cleaning and closed-circuit television (CCTV) inspection of new or existing sanitary sewer and storm drainage pipelines, and for required warranty CCTV inspections of pipelines. The purpose of this work will be to determine the condition of the pipeline, document the location of connections and other key features, identify any structural deficiencies, and to locate defects that may be allowing groundwater to infiltrate into the pipeline.

18.02 GENERAL

Experienced and pre-qualified personnel utilizing equipment and materials meeting the requirements of these specifications shall perform all work. Pre-qualification shall require that the contracting company and the job supervisor each have a minimum of three (3) years experience in the performance of the type of work specified and shall have specifically performed at least 100,000 feet of cleaning and television inspection within the past three years. A company with less than three (3) years experience may pre-qualify if they can demonstrate to the satisfaction of the City that they have the capabilities and overall experience, equipment and expertise to satisfactorily complete the project in accordance with these specifications.

All work shall be performed to the minimum standards of the industry. Where not conflicting with the requirements of these specifications, the most current available edition of the National Association of Sewer Service Companies (NASSCO) Specifications Guidelines and the NASSCO Inspector Handbook shall be used as a measure of the standard of practice for this work.

The Contractor shall use designated City and standard industry terminology in the performance and documentation of the CCTV inspection work. Pipeline joints, as used within these specifications, refer to the junction of two pipes. The term, "manhole section" as used in these specifications shall mean the length of pipe connecting two manholes or a manhole and a clean-out.

Before final acceptance of the work by the City, the Contractor shall review with the City the findings of the fieldwork to confirm that all necessary work has been performed as needed. This shall include a review of finished written records of defects found, the videotapes, and any sketches or diagrams prepared to illustrate defects found.

18.03 ACCESSIBILITY

Due to some site constraints, it is highly recommended that all prospective CCTV Contractors review the project site locations for accessibility. Entry onto private property without permission is not authorized. Where permission is denied, it shall be the Contractors burden to develop an alternative approach to inspecting the pipeline.

18.04 SOUND CONTROL

The noise level from the Contractor's operations, between the hours of 10:00 PM and 7:00 AM, shall not exceed 50 dba at the exterior of any residential unit within 1,000 feet of the Contractor's work. This requirement does not relieve the Contractor of the responsibility for complying with local ordinances regulating noise level.

Said noise level requirement shall apply to all equipment on the job or related to the job, including but not limited to trucks, transit mixers or transit equipment that may or may not be owned by the Contractor. The use of loud sound signals between the hours of 10:00 PM and 7:00 AM shall be avoided in favor of light warnings except those required by safety laws for the protection of personnel.

18.05 SAFETY

The Contractor shall submit to the City a copy of the Contractor's safety program demonstrating that the Contractor's equipment, methods and procedures meets or exceeds all applicable CAL-OSHA and FED-OSHA regulations, with emphasis on hazard-free confined space entry. When work will be performed on one of the City's major streets or highways, traffic control plans shall be submitted to the City and, when appropriate, Caltrans, prior to commencing work. The Contractor shall obtain approved safety programs and traffic control plans from the City, and Caltrans, when applicable, before proceeding with fieldwork.

18.06 PREPARATORY CLEANING

Prior to CCTV work, pipeline(s) shall be cleaned so any cracks or other defects can be observed during the CCTV inspection work. The designated manhole section(s) shall be cleaned using hydraulically propelled, high-velocity jet, or mechanically powered equipment. The Contractor shall clean the pipeline with a minimum of two (2) passes of a high-velocity jet-cleaning machine (hydroflusher). Newly constructed pipelines shall be cleaned to remove all foreign materials from the pipelines. Pipelines to be inspected for warranty acceptance shall be cleaned to remove all foreign material. Larger pipelines that may have minor deposits in the barrel shall be cleaned to restore carrying capacity to a minimum of 95% of original. Grease accumulations in sanitary sewer pipelines shall be removed so cracks and breaks can be observed during TV inspection. Cleaning shall be performed before inspection but not more than 48 hours before the CCTV inspection of

the pipeline is started. All debris and loose material shall be removed at the next downstream manhole structure, transported to a disposal site and disposed of lawfully.

Sewer hydrocleaning equipment (hydroflusher) of high-velocity type shall be truck or trailer mounted. The equipment shall have a minimum of 500 feet of high-pressure hose with a selection of two or more cleaning nozzles. The equipment shall be capable of supplying water at 60 gallons per minute at a minimum working pressure of 1,200 pounds per square inch (psi), and regulated to not exceed a maximum pressure of 1,500 psi. The nozzles shall be capable of producing a scouring action for any pipeline size scheduled to be cleaned. All controls shall be located so that the equipment can be operated above ground at minimal interference to existing traffic and/or danger to the operator. Due to possible accessibility constraints, additional lengths of high-pressure hose may be required. Where accessibility constraints exist, reduced flow and pressure may be used subject to the approval of the City. However, the performance criteria for cleaning of the manhole section shall remain unchanged.

It is recognized that there are some conditions such as broken pipe and blockages that prevent cleaning from being completed or where additional damage would result if cleaning were attempted or continued. If cleaning of an entire section cannot be successfully performed from one manhole, the equipment shall be set up on another manhole and cleaning again attempted. If, again, successful cleaning cannot be performed or the equipment fails to traverse the entire manhole section, it shall be assumed that a major blockage exists, work shall be stopped on the manhole segment in question, and the City shall be immediately notified. Where a broken pipe or a major blockage is suspected, the Contractor shall not proceed with additional cleaning, except at own risk, without the specific written direction of the City.

When hydraulic cleaning equipment is used, the Contractor shall be responsible to plan and control the cleaning operations to prevent flooding of the sewers/storm drains and public or private property. Movable dam type equipment shall be constructed in such a way that a portion of the dam may be collapsed at any time during the cleaning operation to protect against flooding of the sewer/storm drain. Movable dam equipment shall be equal in diameter to the pipe being cleaned and shall provide a flexible scraper around the outer periphery to ensure removal of grease.

Whenever lines to be cleaned show evidence of being more than one-half filled with solids, bucket machines and rodding machines shall be utilized to remove most of materials before hydraulic equipment is brought into use for finishing the cleaning of the pipeline. The Contractor shall also use bucket machines or rodding machines in instances where severe root intrusion or heavy grease is encountered. Bucket machines shall be operated in pairs with each machine powered by an engine with a minimum of 16 horsepower to ensure sufficient pulling power. Power rodding machines shall be of a continuous rod-type capable of holding a minimum of 1,000 lineal feet of rod. The machine shall have a positive rod drive to produce a 2,000-pound rod pull. To ensure safe operations, the

machine shall have a fully enclosed body and an automatic safety throw-clutch and other safety equipment required by law. Bucket machines and rodders shall be equipped with proper tools for all types of cleaning in the sizes of pipe in which work is to be performed.

Whenever bucket machines are used, the bucketing process shall be in one manhole section at a time. A bucket of proper size shall be placed in the downstream manhole and pulled at intervals toward the upstream manhole until the entire manhole section has been cleaned. Upon completion of the bucketing operation, hydraulically propelled or high-velocity sewer/storm drain cleaning equipment shall be used to ensure that all sand, grease and other fine materials have been removed. Satisfactory precautions shall be taken to protect the pipelines from damage that might be inflicted by the improper use of cleaning equipment.

After cleaning the mainline, the Contractor shall spray or wash down the interior walls of each manhole with a nozzle or gun using approximately 500 psi of water.

When the Contractor has been authorized to take water from fire hydrants:

- The water shall be conserved and not used unnecessarily.
- Only approved fire hydrant wrenches and shut off valves shall be used.
- A visible air gap shall be maintained between the discharge of the fire hose and the Contractor's water storage tank. The air gap shall be visible from the ground surface.
- No fire hydrant shall be obstructed except to refill empty water tanks.

All sludge, dirt, rocks, sand, grease and other solids or semisolid materials resulting from all types of cleaning operations shall be trapped and removed at the downstream manhole of the section being cleaned. Passing materials from manhole section to manhole section, which could cause line stoppage, accumulations of sand in wet wells or damage to pumping equipment, shall not be permitted. All solids or semi-solid material removed from the wastewater collection system during the cleaning operation shall be removed from the site and disposed of in a lawful manner.

Final acceptance of the cleaning work will be made after CCTV inspection completion.

18.07 FLOW CONTROL

The maximum allowable depth of flow in pipelines to be inspected using closed-circuit television (CCTV) equipment varies by the pipe size as shown in the following table.

PIPE SIZE	PERCENT OF PIPE DIAMETER
6" – 10" Pipe	20% of pipe diameter
12" – 24" Pipe	25% of pipe diameter
27" & up Pipe	30% of pipe diameter

When the depth of flow in the sanitary or storm drain pipeline is above the maximum allowable, or inspection of the complete periphery of the pipe is necessary to effectively conduct the television inspection operations, one or more of the following methods of flow control shall be used. Where high flows are encountered after the pipelines have been cleaned, priority consideration shall be given to scheduling the CCTV inspection work for the late night hours between 11:00 p.m. and 6:00 a.m.

When and where bypass pumping is required to meet the requirements for the maximum depth of flow, the Contractor shall submit to the City detailed plans and descriptions outlining all provisions and precautions to be taken by the Contractor to implement bypass pumping. The plan shall be specific and complete, including such items as: schedules, notifications to the users of the manhole section when the CCTV inspection is to occur with any special instructions, locations, elevations, capacities of equipment, materials and all other incidental items necessary and/or required to ensure proper protection of the facilities. The plan shall include compliance with the City's National Pollution Discharge Elimination System (NPDES) permit requirements and conditions. No work shall begin until all provisions and requirements have been reviewed and approved by the City.

A. Plugging and Blocking: Plugs shall be inserted into sanitary or storm drain pipelines at a manhole upstream from the section to be inspected, tested and/or sealed. The plug shall be so designed that a portion of the sewer/storm drainage flows can be released. Flows shall be substantially reduced or temporarily stopped to properly inspect the pipe.

B. Bypass Pumping: When bypass pumping is required to ensure completion of the television work, the Contractor shall be required to furnish the pumping equipment, conduits, etc. necessary to perform this item of work. The design, installation and operation of the temporary pumping system shall be the Contractor's responsibility.

All pumps used shall be fully automatic self-priming units that do not require the use of foot-valves or vacuum pumps in the priming system. The pumps may be electric or diesel powered. All pumps used must be constructed to allow dry running for long periods of time to accommodate flow variations. All discharge systems shall be constructed of rigid pipe with positive, restrained joints to prevent accidental spills.

18.08 TELEVISION INSPECTION

After the pipeline has been cleaned, the manhole sections shall be visually inspected by means of closed-circuit television. The inspection shall be done one manhole section at a time and the flow in the section being inspected shall be suitably controlled as specified herein. Closed-circuit television (CCTV) inspection shall be used to assess:

- The condition of existing pipeline.
- Root intrusion problems, if any.
- Internal defects that should be corrected and applicable repair or rehabilitation methods.
- Infiltration sources.

The Contractor shall be responsible for providing quality audio, video, and written documentation of pipeline condition. This shall include recording all defects, including visual evidence of groundwater infiltration and any structural defects.

If the CCTV inspection work reveals any defects or conditions that could reasonably lead to an emergency blockage or pipe failure, the Contractor shall immediately notify the City and, as applicable, move on to other pipelines, continuing work uninterrupted. Additionally, any obstructions that significantly restricts the flow and could cause a sewer surcharging or flooding problem shall be reported to the City immediately and the Contractor's crew shall move on to other pipelines, continuing work, as applicable.

The Contractor shall coordinate on a daily basis and make provisions to ensure the City representative is present whenever CCTV inspection work is being performed. While it is understood that the City representative(s) may not always be present, the Contractor understands that the City representative(s) may be present at various points during the work to assess that quality requirements are carried on throughout the work.

Inspections shall be performed while the line segments are in service without the need for plugging or flow diversion unless previously approved by the City. If necessary, the Contractor shall schedule the work to be performed late at night between the hours of 11:00 PM and 6:00 AM. Late night CCTV inspection work shall not begin until the Contractor has received approval from the City for a nighttime traffic control plan submitted by the Contractor.

All line segments shall be televised complete from starting manhole to ending manhole on the same video in a continuous run. Partial televising on one video and then completing the run on another is unacceptable and segments so documented shall be rejected.

Cracks, chips visible infiltrations and other defects not consistent with these Standards shall be corrected in a manner acceptable to the City. The failing section of pipe shall be again CCTV inspected after the repair work has been completed.

A. Equipment and Procedure: The CCTV inspection shall be completed using a cable-pulled or self-propelled closed circuit television camera. The camera shall be operative under 100 percent moisture conditions. Cameras used for CCTV inspection of pipelines eight inches in diameter and larger shall be of the articulating head type to allow laterals, joints and defects to be viewed directly.

The television camera used for the inspection shall be a color format specifically designed and constructed for such inspections. Lighting and camera quality shall be suitable to allow a clear and focused picture clearly showing the entire inside periphery of the sanitary or storm drain pipeline for a minimum of six lineal feet ahead of the camera. The camera shall have a minimum capability of 350 line resolutions. The camera shall be equipped with a variable intensity control of the camera lights with remote control adjustments for focus to ensure peak picture quality throughout all conditions encountered during the survey. Focal distance shall be adjustable. Camera monitors shall be located where a City representative can view the monitor and make notes in addition to the operating technician. Monitors shall have a resolution capability of no less than 525 lines. The date of the survey, the number or location of the beginning and ending manholes for the pipeline being surveyed, and a continuous forward and reverse read-out of the camera distance from the manhole of reference shall be continuously displayed on the monitors as part of the video presentation.

A Polaroid-type or a digital camera with a resolution of capacity no less than 720 by 1024 lines per inch shall be available for making still photos for reproduction from the video monitor(s). The still cameras shall be equipped with proper lens and mountings to frame the monitor. Photos shall be taken at the request of the City's representative or the discretion of the operating technician to record conditions of interest during the survey.

The Contractor shall control the movement of the television camera at all times. This may be accomplished by means of remote control winches or by telephone or other suitable means of communication between the winches at either end of the manhole section being surveyed. The travel speed of the camera shall be uniform and shall not exceed 30 feet per minute. Any means of propelling the camera through the sewer/storm drain that would exceed this rate of speed or produce non-uniform or jerky movements shall not be acceptable. In no case shall the hose of a high-velocity water cleaning machine be allowed for use as a tow cable. The camera shall be stopped and/or backed up to view and analyze apparent defects and unusual or uncommon conditions within the pipeline. The Contractor shall at all times be able to move the camera through the line in either direction without loss of quality in the video presentation on the monitor. The picture shall provide a clear, stable image of the resolutions specified.

The Contractor shall furnish the City with video of an actual sewer/storm drain line inspection that is satisfactory to the City and meets the job specifications for television inspection to establish working criteria for video picture quality which must be maintained throughout the project. This video shall become the property of the City and shall be used throughout the project as a standard that the Contractor's video picture quality must meet.

The pipe diameter shall be obtained by physical measurement in the upstream (or downstream) access structure. Pipe material, i.e., RCP, VCP, CMP, and lengths between manholes shall also be verified and documented.

B. Video: The Contractor shall provide an acceptable picture that is in focus, distinct, clear, and properly illuminated, with good contrast and without distortion. The picture shall be of true and adequate color and tint, free from interference and distortion. The picture shall show at least 70 percent of the pipe periphery above the waterline. All recording shall be in color on approved digital format in media as determined by the City using an articulating head type camera with the ability to achieve and maintain proper balance of tint and brightness. The loss of color or severe redness due to equipment malfunction and black and whites pictures irrespective of quality shall be cause for rejection.

The camera lens shall be kept clean and clear and any fogging due to oil, grease, or other material or debris. Material that obscures the lens shall be cleaned off before proceeding with the recording operation. If debris or other obstructions cause reduced visibility, or if the image is obscured, the Contractor shall make reasonable attempts to clear the lens of the camera before continuing inspection.

The camera lens shall remain above the visible water level and may submerge only while passing through clearly identifiable line sags. If at any time the flow exceeds 25 percent of the diameter of the pipeline, the inspection must be stopped until the flow subsides or, if necessary, the Contractor shall reschedule the inspection, possibly for a late night inspection of the pipeline.

The camera shall be stopped, for a minimum of five (5) seconds at every lateral to look up the lateral and see any apparent defects, broken pipe, root intrusion, or other defects. The lens and lighting shall be readjusted, if necessary, in order to ensure a clear, distinct, and properly lighted feature. Additionally, a five (5) second blank space shall be inserted between line segments to more clearly mark the end of one (1) televised line and the beginning of another.

1. *Illumination*. The picture shall have adequate light to clearly ascertain any pipeline defects like cracks and their severity in addition to clearly seeing other features like laterals and joints.

2. *Focusing*. The picture shall be clear and distinct without being obscured by dirty lenses or foggy pipeline condition, or out of focus due to operator alertness.

3. *Color*. Loss of color for all or a part of a line may be cause for rejection.

4. *Water Depth*. High flows causing the depth of water to exceed the foregoing criteria shall be cause to reject the televised line segment. Surcharging (and flooding of the camera lens) shall not be excusable. Any condition where the camera goes under water for a reason other than a pipeline sag condition shall, in general, be an unacceptable recording condition, and the televised pipeline segment shall be subject to rejection. Surcharging (and flooding of the camera lens) shall not be an excusable condition if it has been artificially created upstream from the placement of flow plugs or flushing of the sanitary sewer.

Other unacceptable conditions that shall serve as a cause for rejection of submitted videos include, but are not necessarily limited to:

- Loss of vertical hold which impacts the ability to read and interpret the video.
- Incorrect manhole identifications if it is not clear which line has been televised.
- Inaccurate footage readings. The footage measurements shall form the basis for possible subsequent sewer repair or rehabilitation work. Therefore any inaccuracy in the continuous footage measurement to a defect or any identifiable feature which leaves doubt as to the accuracy of the location of a specific defect or the total length of the manhole-to-manhole segment shall render the video of the line segment as unacceptable.
- Any other unidentifiable defect such as equipment interference or malfunction, blurred or obscured images from an unknown source that detracts from the ability to read the video with reliable accuracy.

C. Audio: All recordings shall have an audio descriptive narration to supplement the CCTV inspection report log. The Contractor shall clearly identify on the audio portion of the video the date of the work and the location of the beginning and ending manholes complete with the street intersections and, where applicable, house numbers. The Contractor shall also clearly identify on the audio portion of the video all important features such as the location of all laterals, taps, breaks, roots, and other defects in addition to information identifying which manhole-to-manhole segment is being inspected. These features are to also be noted on the written video log.

The audio portion of the composite signal shall be sufficiently free from electrical interference and background noise to provide complete intelligibility of the oral

report. Audio reports shall be recorded on the videos as the CCTV inspection is being completed and shall include the location of the pipeline segment being inspected, street location or manhole numbers involved, a manhole-to-manhole direction of travel, and a description of the pipeline conditions as they are encountered.

The Contractor shall narrate the video as the pipeline is being inspected. The audio portion of the video shall conform to the following:

1. *Clear Speaking.* The technician shall speak clearly and directly without interruptions. Unintelligible speech shall not be accepted and shall be grounds for rejection of the completed video.

2. *Minimal Background Noise.* The microphone shall be positioned so that noise shall not be present from passing automobiles, trucks and construction equipment. Excessive noise is unacceptable and shall be grounds for rejection of the completed video.

3. *No Coughing or Yawning.* Personal noises from the operator while describing video recording situations shall not be accepted and shall be grounds for rejection of the completed video.

4. *No Recording On Used Video Media.* All videos and logs shall be project specific. There shall be no other recordings or portions of recordings on the same video media with another project.

Violation of any of the requirements for the audio portion of the performed work shall serve as full justification for rejection of the fieldwork. No payment will be made for rejected work.

D. Documentation: Work products for CCTV inspection shall consist of videos, CCTV inspection log sheets, and any still pictures taken of specific defects as the work proceeded. Before videos and written inspection reports are turned over to the Engineer, they shall be reviewed by a trained individual who has a minimum of three years documented experience in evaluating and prioritizing problems in sanitary/storm sewer systems. The Contractor shall prepare a written report stating the Contractor's opinions of the best method of repairing each manhole section.

The City shall review prior to acceptance the CCTV inspection documentation for an entire manhole-to-manhole pipeline segment. If any portion of a line is unacceptable, the entire segment shall be deemed unacceptable and shall be re-televised and resubmitted. A line that is partially televised and is incomplete due to an excusable condition such as a partially collapsed pipeline shall be accepted for the televised length only. CCTV inspection forms shall be evaluated against the video for accuracy and completeness, prior to City acceptance.

The videotaping and the monitoring equipment shall have the capability to instantly review both video and audio quality of the video productions at all times during the television survey. The purpose of the video recording shall be to supply a permanent visual and audio record of the manhole section surveyed. The videos shall become the property of the City upon completion of the project.

Printed location records shall be kept by the Contractor clearly showing the exact location in relation to the adjacent manholes of each infiltration point, building sewer or storm drain connections, all joints which are infiltrating or exhibit other unusual condition, roots, sanitary or storm drain connections, collapsed sections of pipe, joints sealed, presence of scale or corrosion and other discernible features. This information shall be presented to the City in a typewritten report within two weeks of the completion of the fieldwork.

E. Video Inspection of City Service Laterals: Video Inspection of City service laterals are subject to all the above requirements and shall additionally meet the following requirements.

- Video shall include data view display feature capable of showing the following information.
  - Lateral address (Lot # if no address is known)
  - Date and time of inspection
  - Contractor name
  - Inside pipe diameter and type
  - On-going footage counter accurate within 3 percent
  - Identify access and starting point for video inspection, e.g., cleanout to the mainline
- The travel speed of the camera shall be uniform and shall not exceed 20 feet per minute.
- It is desirable to record during dry weather. The contractor shall introduce water prior to video inspection of the lateral.
- The direction of recording shall be forward from upstream to downstream and lengths shall be measured from cleanout to mainline.
- Labeling: Video shall be labeled and Labels shall be typewritten or legibly hand printed and include:
  - Title: CCTV Sewer Lateral Inspection, Project #
  - Street Address

- Date of Inspection
- Tape provided by "Contractor Name"
- Contractor License No.
- Hard copy of video log to accompany the video inspection and all deficiencies are identified on the log sheet.
- City project manager notes and sign off on review of material prior to turning over to the O&M supervisor. Package must be neat and orderly.

SECTION 19: GRADING AND STORM WATER QUALITY MANAGEMENT

19.01 GENERAL

Grading and erosion control shall include excavation and embankment work for channels, pads and roadways, erosion control measures and retaining walls. All work shall be performed in accordance with the City of Woodland Design Standards and Grading Ordinance, latest edition of the Uniform Building Code, approved improvement plans, and the latest edition of the Caltrans Standard Specifications.

19.02 CONSTRUCTION STAKING

Construction staking shall be provided by the Developer for all grading improvements, and shall include:

A. Channels: Channel staking shall provide the station and offset, as well as the cut to the nearest tenth of a foot, 0.1 foot. Stakes shall be provided at a maximum of every 50 feet in tangent sections and every 25 feet in curved sections.

B. Erosion Control Measures: Erosion control measures shall be staked as needed and shall also conform to any Storm Water Quality Management requirements as described in Section 19.05.

C. Pads: Pad staking shall provide the station and offset, as well as the cut to the nearest tenth of a foot, 0.1 foot. Stakes shall be provided at all property corners.

D. Retaining Walls: All retaining walls shall be staked for line and grade to the nearest tenth (0.1) of a foot.

E. Roadways: Roadway excavation staking shall provide the station and offset, as well as the cut to the nearest tenth (0.1) of a foot. Maximum staking intervals shall be 50 feet in tangent sections and 25 feet in curves. Stakes shall also be placed at curve beginnings, ends, point of reverse curvature, point of compound curve, horizontal angle points and at changes of grade.

19.03 GRADING WORK

All grading work shall be performed per the City of Woodland Standard Specifications and Grading Ordinance, recommendations of site specific geotechnical reports and the Geotechnical Engineer, the Caltrans Standard Specifications, the approved plans and the following specifications:

A. Channels: All fill areas in channels shall conform to recommendations outlined in the soils report and receive suitable material to be compacted to a minimum of 90 percent relative density compaction. Suitable fill material shall be determined by the Developer's Geotechnical Engineer. Unsuitable materials shall be removed from the channel and replaced with suitable backfill material based on recommendations provided by the Developer's licensed Geotechnical Engineer.

B. Pads: All pads shall be compacted to a minimum density of 90 percent relative compaction after unsuitable materials are removed from the pad areas per the recommendations of the Developer's licensed Geotechnical Engineer. The Developer shall submit a letter from the Geotechnical Engineer stating that the grading was performed in conformance with the geotechnical report (and subsequent updates).

C. Retaining Walls:

Concrete/Masonry Walls. All concrete or masonry walls shall be installed per the manufacturers or design engineer's recommendations. No other wall construction materials shall be allowed.

D. Roadways:

1. *Compaction*. Relative compaction of not less than 95 percent shall be obtained for minimum depth of 0.5 feet below the subgrade grading plane for the width between the outer edges of shoulders, including curb and gutter areas, whether in excavation, embankment or at original ground level. All other material shall be compacted to a relative compaction of 90 percent, including under sidewalk areas.

2. *Grade Control*. When the next layer to be placed on the subgrade is an **HMA** pavement, asphalt concrete base or asphalt concrete sub-base, the subgrade grading plane at any point shall not vary more than 0.05 foot above or below the grade established by the project surveyor.

3. *Stability Testing*. The Contractor shall proof roll the subgrade areas with a full, 3,000 gallon water truck prior to placement of aggregate base or aggregate sub-base. The equipment used for proof rolling shall be subject to Inspector approval.

4. *Unsuitable Materials*. Unsuitable material encountered within two feet (2') below grade or two feet (2') below original ground shall be removed and replaced with a suitable backfill material. Suitable backfill materials and methods for placement shall be reviewed and approved by the on-site Geotechnical Engineer. Other methods for subgrade stability may be used upon review and approval of the Developer's Geotechnical Engineer.

E. Traffic Control, Warning Devices and Public Safety:

The Developer/Contractor shall be responsible for installation and maintenance of all necessary Traffic Control, Warning Devices and Public Safety in accordance with the California MUTCD and the Work Area Traffic Control Handbook.

19.04 GRADING AT TREES

Grading under trees with aesthetic value (trees with a nine inch (9") diameter trunk or larger, measured four and one-half feet (4½') above the ground, in healthy condition, and all oak trees) shall be given special attention. Every reasonable effort shall be made to avoid removing trees or creating conditions adverse to the tree's health. The natural ground within the dripline of trees, especially oak trees, shall remain as undisturbed as possible. Grading within the dripline of oak trees shall not be permitted without adequate justification and subject to approval by the City Engineer.

At the City's discretion, cross sections may be required where trees are located adjacent to roadways, new slopes or critical areas. In addition, a dimension from the face of a tree to some critical point or line may be required.

The following comments regarding trees shall be included on all improvement plans where trees are to be saved:

A. Only those trees marked with an "X" are to be removed during construction.

B. During construction there shall be no grading, trenching, earth removal or addition, building pad formation or earth alteration of any kind within the dripline of any oak tree, or tree of aesthetic value, not marked with an "X".

C. During the construction phase of the project, a physical barricade shall be erected and maintained coincidental to the driplines of all trees not marked with "X". Within this barrier no construction related activities shall be allowed including but not limited to vehicular parking or material storage.

D. The physical barricade shall be T-bars and four foot high hogwire fencing minimum, or approved equal. Signs shall be posted on all sides of fences surrounding tree(s) stating that tree(s) are preserved.

E. Any and all tree roots exposed by construction activities shall be covered with a protective material during construction.

F. Grading activities within the protected zone of a Native Oak Tree or Landmark Tree shall be conducted under the conditions set forth under the Grading Permit and Tree Permit Conditions. These conditions shall also include:

1. *Fencing*. A minimum five foot (5') high chain link fence, or approved equal, by the City of Woodland, shall be installed at the outermost edge of the protected zone of each protected tree or group of trees. The fence shall not be removed until written authorization is received from the City.

   Fences shall be installed in accordance with the approved fencing plan prior to the start of any grading operations. The Contractor shall call the City of Woodland for an inspection of the trenching prior to grading.

2. *Signs*. The size of each sign shall be a minimum of two feet by two feet (2' x 2') and shall contain the following language:

   WARNING
   THIS FENCE SHALL NOT BE REMOVED
   OR RELOCATED WITHOUT WRITTEN
   AUTHORIZATION FROM THE
   CITY OF WOODLAND

   Signs shall be installed on the fence in four locations, equidistant around the tree. On fencing around a grove of trees, the signs shall be placed at approximately 50-foot intervals.

3. No grade changes are permitted which causes water to drain to within twice the longest radius of the protected zone of any protected tree.

4. Removal of any native ground surface fabric from the protected zone of the tree shall require protection of the tree within 48 hours of removal.

5. Preservation devices (such as aeration systems, oak tree wells, drains, special paving and cabling systems) shall be submitted for City approval, installed per approved plans, and certified by the Developer's arborist.

6. The Contractor shall provide immediate protection with construction of a retaining wall against moisture lost to exposed roots due to construction of a retaining wall within the protected zone of the tree. Retaining wall shall be constructed within 72 hours after completion of grading in the zone.

Roots

a. Minor Roots. Minor roots (less than one inch (1") in diameter) may be cut. Damaged roots shall be traced back and cleanly cut behind any split, cracked or damaged area.

b. Major Roots. Major roots (over one inch (1") in diameter) may not be cut without approval of City and supervision of the Developer's arborist.

7. Trenching within the protected zone of a tree, when permitted, may only be conducted with hand tools, in order to avoid root damage. The Contractor shall follow provisions approved in the Utility Trenching Pathway Plan, submitted by the Developer to the City of Woodland.

19.05 STORM WATER QUALITY MANAGEMENT

To protect storm water quality and prevent tracking of soil on roadways, the City requires the preparation and implementation of the following:

- Water Pollution Control Plan: for projects less than one acre in size and not part of a larger development that will be under construction during October 1 through April 15.

- Storm Water Pollution Prevention Plan: for all projects, regardless of the timing of construction, that results in the disturbance of one acre or more of land or is less than one acre but is part of a larger development.

The City references California Stormwater Quality Association (CASQA) manuals for use and aid in the preparation of Water Pollution Control Plans and Storm Water Pollution Prevention Plans. The CASQA manuals can be located at https://www.casqa.org/LeftNavigation/BMPHandbooksPortal/tabid/200/Default.aspx.

See SWRCB website for additional information, general permit and various forms at: http://www.waterboards.ca.gov/water_issues/programs/stormwater/construction.shtml.

Water Pollution Control Plan

Before starting any ground disturbance, a Water Pollution Control Plan shall be submitted to the City. The plan should identify the schedule for the erosion control work included in the plan and all water pollution control measures that are proposed to protect storm water quality and tracking of soil on roadways. These measures must be implemented during construction that occurs between October 1 and April 15.

Storm Water Pollution Prevention Plan

The State Water Resources Control Board (SWRCB) through its Regional Water Quality Control Boards (RWQCB) administers the National Pollutant Discharge Elimination system (NPDES) storm water permitting program. Construction projects that disturb more than one acre of soil or less than an acre but are part of a larger development must be covered by an NPDES permit from the Central Valley RWQCB. The owner of the land where the construction activity is occurring is responsible for obtaining a permit. The land owner shall provide the City with copies of all permits. Compliance with NPDES requirements includes the preparation and implementation of a Storm Water Pollution Prevention Plan (SWPPP). Construction sites must have an effective combination of erosion and soil control measures implemented by October 1 of each year.

The following measures (A through F) are required for all construction projects that disturb more than one (1) acre of soil.

A. After the property owner submits the Permit Registration Documents (PRD) and pays the appropriate fees, the RWQCB will provide the land owner with a Waste Discharge Identification (WDID) number. The WDID must be provided to the City before ground disturbance begins.

B. On private development projects, the City or City Staff shall not be listed as the project owner on the PRD (should be the land owner/developer).

C. On City Capital Projects, the City Department that manages and maintains capital improvements will be listed as the project owner on the PRD.

D. The land owner must prepare and implement a Storm Water Pollution Prevention Plan (SWPPP) in accordance with the State Construction **General** Permit. The required components of the plan may be obtained by visiting the SWRCB website or the CASQA website. The SWPPP must be kept at the construction site during construction and also be available for review when requested by the RWQCB or the City. Two (2) copies of the SWPPP shall be submitted to the City for their use during construction.

E. To protect storm water, Best Management Practices (BMP's) must be used year-round. Construction sites must be ready for the rainy season by October 1st (an effective combination of erosion and sediment control measures must be installed).

F. A Monitoring and Sampling Program is required to be developed as part of the SWPPP. The Developer/Contractor shall retain a list of firms that can conduct storm water sampling, assess environmental impacts resulting from discharges to the storm water conveyance system and conduct site remediation if discharges to

the storm water conveyance system occur. The Developer/Contractor will be responsible for inspecting the project site per the NPDES requirements. Part of the monitoring program includes the requirement to update the SWPPP map and prepare amendments as necessary. Provide copies of amended SWPPP maps and documentation to the City.

G. In addition to the state requirements for the SWPPP, the following measures must be incorporated into each SWPPP:

1. *Portable Restroom Facilities.* Spills from portable toilets are a potential environmental hazard. Proper management will prevent any wastewater, wash water or chemicals from entering storm drains.

   a. Place portable toilets either:
      - *away from or behind sidewalks*: a minimum of 50' from any storm drain or;
      - *on sidewalks*: a minimum of 100' from any storm drain and be protected with tarps or plastic under the area. Berms of sandbags should be placed around the edges to contain spills and/or wash water. The contents of the bermed area shall be pumped to a location that will prevent contaminants from reaching the storm drain.

   b. Secure portable toilets to prevent toppling or blowing over in winds, or they must be placed in protected areas.

   c. Inspect and monitor portable toilets for leaks and proper storage weekly.

2. *Stabilized Construction Entrance.* Stabilizing the access area of a construction site will minimize the tracking of mud and dirt onto public roads and prevent sediment from entering the storm drain. Please refer to CASQA diagram TC-1 for more detailed information.

   a. Provide stabilized access 50' minimum length by 10'-15' minimum width. The minimum depth of stones for the access road shall be 12" or as recommended by a soils engineer. Select entrance stabilization materials (aggregate, recycled asphalt concrete, concrete greater than 3" but smaller than 6") based on longevity, required performance and site conditions. Properly grade the access area to prevent runoff and design it to support the heaviest vehicles in use. Other measures to prevent tracking onto roadways may be used if approved by the City.

b. Limit the access areas to the construction site and provide ample turning space as part of the entrance. Require that all employees, subcontractors, and suppliers utilize the stabilized access area.

c. Route runoff from the stabilized access area through a sediment trapping device before water is discharged.

d. Inspect the access area for damage regularly and repair as needed. Access areas shall require periodic top dressing with additional stones. Service sediment trapping devices regularly.

e. Inspect local roadways adjacent to the site daily. Sweep or vacuum to remove visible accumulated sediment within 24 hours.

3. *Tire Wash Area.* A tire wash area may become necessary if there is a considerable amount of hauling conducted on site. Although not required for all construction sites, if repeated sediment tracking warrants additional measures, the City will require the following.

a. Provide a water supply to the tire wash area.

b. Provide a 20-30' wide entrance/exit to prevent vehicles from driving through the wash area.

c. Inspect regularly to prevent tracking of sediment onto public roads. Provide a drainage ditch that will convey the runoff for the wash area to a sediment trapping device.

4. *Concrete Waste Management.* Concrete waste is toxic to fish and the aquatic environment and requires proper handling and disposal to eliminate discharges into storm drains.

a. Place the wash out area at least 50' from storm drains, open ditches, or bodies of water. If a concrete washout management firm in not used, the contractor may construct a temporary pit or bermed area large enough for liquid and solid waste.

b. Store dry and wet materials away from waterways and storm drains; cover and contain to protect from rainfall and prevent runoff.

c. It is prohibited to dispose of wash out or sweepings from exposed aggregate concrete into the street, storm drains, open ditches, or waterways. Wash out concrete mixers only in designated areas where the water will flow into a temporary pit where the concrete

can set, be broken up, and then disposed of as recycled concrete waste or dispose as solid waste in a dumpster. Concrete washout management firms should be scheduled to clean the washout on a weekly basis at the minimum and more frequently dependent on amount of use.

5. *Solid Waste Management.* Properly disposing of waste materials on a construction site will protect the storm water quality.

   a. Use proper waste collection bins. Covered bins are required for waste collection; Pig-Pens are prohibited unless placed in a covered and contained area such as a PCC slab under the roofed structure.

   b. Designate waste collection areas away from streets, gutters and storm drains. Minimum distance from storm drains and roads should be 50' unless protected.

   c. Collect site trash daily and remove weekly regardless of whether the litter was generated by the contractor, the public or others, especially during rainy and windy conditions.

   d. Toxic liquid wastes (used oils, solvents, and paints) and chemicals (acids, pesticides, additives, curing compounds) shall not be disposed of in a dumpster designated for construction debris.

6. *Inlet Sediment Protection.* Storm drain inlet protection consists of a sediment filter or an impounding area around or upstream of a storm drain. Protection measures temporarily pond runoff before it enters the storm drain, allowing sediment to settle. Please refer to CASQA diagram SC-1 for more detailed information.

   a. Provide an adequate area for water to pond without encroaching into portions of the roadway subject to traffic.

   b. Use inlet sediment filters that consist of gravel bags or other approved sediment control devices to provide effective sediment removal. They must also be designed to allow maintenance of the device and regular removal of trapped sediments. Sediment trapped upstream of Sediment Control BMP shall be removed weekly and prior to a rainfall event. Place BMP's tightly together at joints to prevent or minimize seepage at joints.

   c. Inspect drain inlet protection on a regular basis with additional inspections prior to and after each storm event. Inlet filter bags

shall be inspected weekly and after each rainfall during the wet season and monthly during the dry season. Sediment and debris shall be removed before accumulations have reached one third the depth of the bag. Bags shall be repaired or replaced as soon as damage occurs.

H. Once the project has been completed, the landowner (or contractor/developer) is responsible for the removal of temporary erosion and sediment control devices as well as placing the post-construction BMP's as identified in the site SWPPP.

The landowner must submit a Notice of Termination (NOT), including post construction site photographs to both the City and the RWQCB when construction is completed and conditions of termination listed in the NOT have been satisfied. A copy of the NOT can be found at the RWQCB website at http://www.waterboards.ca.gov/water_issues/programs/stormwater/construction.shtml.

SECTION 20: LANDSCAPE AND PLANTING

20.01 GENERAL

These general requirements provide conditions for all landscape operations in the public right-of-way and on City property including landscaping at the back of sidewalk and the center medians, roundabouts and in public parks. This section applies to all Landscape installation activities.

Landscape planting shall consist of preparing and planting areas as shown on the approved Plans, and as directed by the City Engineer.

20.02 CERTIFICATE OF COMPLIANCE

A Certificate of Compliance shall be furnished to the City Engineer with each lot of material delivered to the work and the lot so certified shall be clearly identified in the certificate.

All materials used on the basis of a Certificate of Compliance may be sampled and tested at any time. The fact that material is used on the basis of a Certificate of Compliance shall not relieve the Contractor of responsibility for incorporating material in the work in conformance with the Plans and Specifications and any such material not conforming to such requirements is subject to rejection, whether in place or not.

20.03 MEASUREMENT OF QUANTITIES

Measurement of Quantities shall be determined by the City Engineer based on delivery tags presented at time of delivery. The Contractor shall give twenty-four (24) hours notice of all deliveries, dates and times. Materials delivered when the Engineer is not present, depending on verifiability, at Engineer's discretion, may not be counted.

20.04 MATERIALS

Materials shall conform to these Specifications and the approved plans.

20.05 CONDITIONS

A. Existing Conditions:

1. Prior to work, the Contractor shall be thoroughly familiar with any surveys and investigative reports directly related to the work to be performed.

2. Contractor shall examine physical conditions at the site, document all conditions differing from those indicated in the contract documents, and inform the City immediately.

B. Environmental Requirements:

1. Contractor shall be aware of, and adhere to, any regulations protecting special plants, wildlife, and natural environmental features present on the project site.

2. Contractor shall be aware of and conform to dirt and dust abatement requirements and water pollution prevention programs.

C. Site Protection:

1. The Contractor shall protect and maintain all existing site improvements, structures, facilities, and utilities from damage, both above and below the ground.

2. Trees, shrubs and other materials which are to remain on the site shall be fully protected by constructing a fence around the items to be protected or other method approved by the City Engineer.

3. Grading around trees shall be limited to outside the dripline unless specifically approved by the City of Woodland. Once grading plans have been approved no grades shall be modified without the approval of the City Engineer.

4. Any tree well graded should be drained to some outfall or swale.

5. No trenching shall occur beneath the drip line of any oak tree to be saved unless approved by the City of Woodland. If approved, grading plans shall bear a statement reading "TRENCHING UNDER THIS TREE IS APPROVED"

6. The following conditions shall apply to ensure preservation of existing trees:

a. Each tree or group of trees to be saved shall be fenced by a chain-link fence prior to any grading or movement of heavy equipment or issuance of any permits.

b. Fencing shall be located one foot outside the drip line of the tree or group of trees.

c. Signs shall be posted on all sides of said fence stating:

WARNING: THIS FENCE SHALL NOT BE REMOVED OR RELOCATED WITHOUT WRITTEN AUTHORIZATION FROM THE CITY OF WOODLAND

7. Parking of vehicles or storage of equipment and materials shall not occur, at any time, under the drip line of trees.

D. Underground Utilities:

1. Contractor shall notify UNDERGROUND SERVICE ALERT at (800) 642-2444 at least 48 hours prior to commencing any excavation.

2. Contractor shall relocate or remove existing utilities as shown on the plans or as directed by the City Engineer. Where utilities are marked, careful hand excavation shall be done to determine exact alignment and depth prior to starting excavations within marked areas.

E. Safety:

1. Contractor shall at all times exercise necessary precautions to provide for the protection of the public and employees.

2. Adequate barricades, flashers, fences, signs, and make little or lights shall be installed in all hazardous locations including, but not limited to, open excavations and areas of pedestrian and vehicular traffic. All situations requiring traffic control shall conform to the appropriate Caltrans Traffic Control Manuals and the **Caltrans** Manual of **Uniform** Traffic Control **Device**s.

3. All hazardous materials including, but not limited to, gasoline, solvents, and other similar materials shall be stored in a safe and protected manner, in accordance with City and health regulations.

F. Equipment:

1. Contractor shall provide and maintain all equipment to perform the work.

20.06 SUBMITTALS

A. Modifications and Revisions: Contractor shall submit proposed modifications and revisions prior to performing work.

B. As-Built (Record) Drawings: Upon final completion of the work, the Contractor shall furnish accurate, up-to-date RECORD drawings that include as-built conditions and any and all changes from the original plans made during the installation of the improvements.

C. Operation Manuals, Maintenance Instructions and Warranties: Prior to final acceptance of work, the Contractor shall provide to the City three copies of manufacturers' written operation and maintenance instructions for all equipment installed within the public right-of-way or within areas that the City may be responsible for maintenance and operation.

The Contractor shall provide a signed letter to the City guaranteeing that the irrigation system has been installed free from defects in materials and workmanship and that the work has been completed in accordance with the drawings and specifications. The letter shall state an agreement, by the Contractor, to repair or replace any defects in materials or workmanship that may develop within one year following final acceptance.

D. Soils Evaluation: The Contractor shall obtain a soil evaluation of all native or import topsoil for use within the area that work is to be performed. Total number of samples shall be based on accepted standards of the industry. A minimum of four (4) one-quart samples shall be evaluated by a City approved soil testing facility. All samples shall be obtained, tested and with test results submitted to the Engineer for review 14 days prior to beginning work. No material shall be delivered to the site, graded on-site, or otherwise modified until the Engineer approves the material.

E. Submit a list of soil amendments and fertilizers to be used per the soils tests and a schedule identifying:

1. When amendments and fertilizers will be on site.
2. How and where they will be stored.
3. When they will be integrated into planting.
4. Where empty containers will be kept on site.

F. Two (2) weeks prior to planting, Contractor shall submit a list of project plant material to the City for review and approval. This list shall identify:

1. Botanical and common name.
2. Container size.
3. Source and location.

4. Minimum height and spread specifications for each type of material identified on the plant legend.

G. Amendment Samples: The Contractor shall provide a one-quart sample of each proposed amendment to a City approved soil testing facility for their testing for conformance to these specifications. No material shall be delivered to the site until the Engineer approves the samples.

H. Substitute Plant Material: The Contractor shall submit notice to the Engineer indicating any unavailable plant material and include proposed plant substitutions. No substitute plants shall be ordered or delivered prior to written acceptance by the Engineer.

I. Post-Amendment Soils Report: Prior to the beginning of the maintenance period, the Contractor shall obtain a soil evaluation of amended topsoil from the site. A minimum of four (4) one-quart samples shall be evaluated by a City approved soil testing facility. All samples shall be obtained, tested and with test results submitted to the Engineer for review and verification of compliance with pre-amendment soil testing recommendations.

20.07 INSPECTIONS

The Contractor shall specifically request, at least two days in advance, the following reviews prior to progressing with the work:

1. Completion of rough grading
2. Verification of amendment incorporation depths
3. Finish grade
4. Plant material approval
5. Plant layout
6. Substantial completion

20.08 SCHEDULING

Scheduling of start and completion shall be agreed upon in writing between the Contractor and the City.

20.09 SUBSTITUTIONS

Substitutions of any item shall not be permitted without prior written approval of the City Engineer.

20.10 PREPARING PLANTING AREAS

Existing flow lines shall be maintained while preparing planting areas.

Material displaced by the Contractor's operations which interferes with drainage shall be removed and disposed of as directed by the City Engineer.

In planting areas where native topsoil is to be left in place, cross rip to a depth of ten inches (10"). Then incorporate amendments to a homogeneous blended soil depth of six inches (6").

Soil shall be cultivated until the condition of the soil is loose and fine-textured to a depth of six inches (6"). Alternately the top six (6") of soil may consist of quality imported top soil homogeneously blended with required amendments.

The top two inches (2") shall be clear of stones, debris and incompatible foreign matter.

Rock and other debris, larger than one inch (1") in diameter, which is brought to the surface during soil preparation, shall be properly disposed of off the project site by the Contractor.

Finish grade of all planting areas shall be reviewed and approved by the Engineer before proceeding with planting.

After 14 days, the area shall be allowed to dry to a condition that any spray equipment will not damage the existing grades.

Weeds shall be sprayed with an approved, post-emergent herbicide, which controls both broadleaf plants and grasses, but which will not contaminate the soil. Substances shall be approved by the City Engineer prior to use.

The use of rubber-tired equipment will be permitted for cultivating operations provided that any unacceptable compaction caused by the equipment used is completely corrected, to the satisfaction of the City Engineer.

Soil in lawn areas adjacent to curbs or paved areas shall be graded so that after settlement, the soil shall be no more than one-half inch (1/2") below adjacent paving.

Plant pits shall be excavated and prepared in accordance with the standard details. Backfill material for the sides of the plant pits shall be a mixture of soil amendment and soil. The proportion of material per plant pit and the quantity of soil amendment shall be as determined by soils analysis, and sufficiently consolidated or surcharged so that after settlement, the backfill material in the plant pit will be even with finish grade. The materials shall be thoroughly mixed to the bottom of the plant pit so that they are evenly distributed and without clods or lumps.

20.11 SOIL AMENDMENT

Soil amendments shall be the following types, unless otherwise indicated and approved on the Plans.

A. Organic Amendment shall be composted bark composed of ninety-five (95%) of the material passing through a one-fourth inch (1/4") screen, fifty percent (50%) through a one-eight inch (1/8") screen. Material shall be stabilized with Nitrogen (1/2 lb. actual nitrogen per cubic yard) and shall not contain more than 5,000 ppm soluble salt. The material shall weigh a minimum of 450 pounds per cubic yard by dry weight. Identifiable wood pieces are acceptable but a balance of material should be soil-like in appearance without recognizable grass or leaves.

B. No planting shall be allowed until all soil amendment delivery tags are received and quantities used are approved by the City Engineer.

20.12 COMMERCIAL FERTILIZER

Fertilizer composition and quantity shall be determined from soils analysis results.

Commercial fertilizer shall be uniformly sized, in a homogenous pellet form and shall be guaranteed to comply with the chemical analysis specified in the Commercial fertilizer, and shall be noted and approved on the plans.

Before applying any fertilizer, the Contractor shall provide the following submittals to the City Engineer for approval.

1. Written description of the material to be used.
2. Rate of application.
3. Method of application.
4. Name of applicator.
5. Diagram of area to which material is to be applied.

20.13 PLANTING - GENERAL

Plantings shall be in accordance with the following provisions and approved by the City Engineer:

A. Plants shall be the variety and sizes shown on the Plans and shall conform to the requirements of these specifications.

Minimum quality of all plant material shall conform to prevailing published specifications of the California Association of Nurserymen and the American

Association of Nurserymen's "American Standard for Nursery Stock", and the California Department of Forestry and Fire Protection "Specification Guidelines for Container-Grown Landscape Trees" unless otherwise indicated or approved by the Engineer.

B. No planting shall be done in any areas until the area concerned has been prepared in accordance with these Specifications and the Special Provisions and presents a neat and uniform appearance satisfactory to the City Engineer.

C. Planting shall not be allowed in any area which in the opinion of the City Engineer is too wet or dry or in any other way unacceptable for planting.

D. No more plants shall be placed than can be completed and watered on that day.

E. Plants shall be set in the backfill material in flat bottomed holes to such depth that after the soil has settled the top of the plant ball shall be one inch (1") above the bottom of the basin or even with the surrounding soil where there is no basin. Plants shall be planted in such a manner that the roots will not be restricted or distorted. Soil shall not be compacted around the roots or ball of the plant during or after planting operations.

F. Any plants which have settled deeper or stand higher than specified in the above paragraph shall be adjusted to required level or replaced at Contractor's option.

G. Plants shall be spaced as indicated on the Plans or in the Special Provisions. Plants in adjacent rows shall be staggered. Groundcover plants shall not be planted closer than three feet (3') to trees or shrubs nor closer than eighteen inches (18") to curbs, paved areas and fences, unless otherwise shown on the Plans.

H. Planting areas that have been compacted for any reason, either before or after planting, shall be re-cultivated by the Contractor, at Contractor's expense.

I. Trees, shrubs and vines in ground-cover areas shall be planted before groundcover plants or cuttings are planted.

J. At the time the plants are planted, stakes shall be placed at certain plants and the plants shall be tied thereto. The plants to be staked and the size of stake and number of ties to be installed shall be as shown on the Plans or specified in the Special Provisions. Stakes shall be placed against, but not through, the plant ball and shall be placed 90 degrees from the prevailing wind.

K. Soil shall be watered so that the soil is moist, not soggy, or dried out.

L. From the time plants are planted until the beginning of the plant establishment period, plants shall be watered, trash and debris shall be removed, weeds shall be controlled and replacements shall be made.

M. At the time of planting, commercial fertilizer shall be applied to all trees, shrubs, vines, groundwater areas and lawn areas as specified in the Special Provisions.

Upon review, the City reserves the right to conduct a site investigation of the proposed plant materials. Contractor shall demonstrate to the City Representative that all plant material has been located and reserved for the project.

All plants shall comply with Federal and State laws requiring inspection for plant diseases and infestations. Any inspection certificates required by law shall accompany each shipment of plants and certificates shall be delivered to the Engineer.

The Contractor shall obtain clearance from the County Agriculture Commissioner as required by law before planting plants delivered from outside the County. Evidence that such clearance has been obtained shall be filed with the City Engineer.

All plants furnished by the Contractor shall be true to type or name as shown on the Plans and shall be tagged in accordance with the standard practice recommended by the American Association of Nurserymen.

Contractor furnished plants shall be healthy, shapely and well rooted. Roots shall show no evidence of having been restricted or deformed. Plants shall be well grown, free from insects, disease or mechanical injury. No plants shall be transplanted to any planting area that is not thoroughly wet throughout the ball of earth surrounding the roots.

Plants may be inspected by the Engineer prior to planting. Any plants rejected shall be removed from the site and replaced by the Contractor, at Contractor's expense.

20.14 PLANTING – SHRUBS, VINES AND GROUNDCOVER

Shrub, vine and groundcover planting shall be in accordance with the following provisions and approved by the City Engineer:

A. Where vines are to be planted against walls or fences, the plants shall be as close as practicable to the wall or fence as shown in the plans.

B. Where shrubs are shown on the Plans to be planted in groups, the outer rows shall be parallel to the nearest pavement or fence.

C. Any adjustment in the number of plants shall be made between the outer rows.

D. Ground cover plants in areas equipped with an irrigation system shall be planted in blocks which conform to the design of the irrigation system. The area covered by one unit of the irrigation system shall be as completely planted as possible, and then watered. Not more than one (1) hour shall elapse from the time any groundcover is planted until it has been watered, unless otherwise specified in the Special Provisions or authorized by the City Engineer.

E. Groundcover plants shall be planted in moist soil and in neat, straight rows parallel to the nearest pavement, curb or fence, unless otherwise previously approved by the City Engineer in a planting plan.

20.15 PLANTING - TREES

Tree plantings shall be in accordance with the following provisions and approved by the City Engineer:

A. Trees shall have soil removed down to the buttress roots. Roots shall be teased out to get correct spread and direction for correct growth of tree with minimal damage to the existing root system. Plants shall be removed from the containers in such a manner that the ball of earth surrounding the roots remains intact, and they shall be planted and watered as hereinafter specified immediately after removal from the containers.

B. After planting, trunk flares (root crown) of trees shall be evident and free of any container soil and/ or planting backfill. The root flare shall be slightly above the surface of the surrounding soil at all times.

C. When planting on a sloped site, the top-most root in the root ball shall be even with the grade on the uphill side of the tree.

D. Tree stock shall be protected from excessive vibration, should not be thrown or bounced off mobile equipment. Trees shall not be dragged, lifted or pulled by the trunk or foliage in a manner that will loosen the root ball.

E. Trees shall exhibit no circling root conditions or evidence of untreated root bound container stock.

F. Trees shall be planted in an upright position.

G. Tree planting pits shall be backfilled to avoid large air pockets or voids within the backfill soil profile.

H. All synthetic materials (i.e. string, rope, plastic, etc.) shall be removed from the tree trunk and root ball prior to planting and shall not be evident within the backfill soil mix.

I. Any support trunk staking supplied with the container tree shall be removed prior to planting.

J. Trees located in parkway strips shall be provided with a 5 foot bark mulch area around their trunk.

K. Tree Stakes for all trees shall be Reddy Stakes (9 foot size) as available from Horizon.

L. Trees planted in grass shall be provided with ArborGard Tree Trunk Protectors or other as approved by the City Engineer.

M. Root Barriers shall be polyethylene or materials with similar characteristics specifically manufactured for the purpose of redirecting root growth away from sidewalk or paved areas. Barriers shall be assembled and interlocked together to form one continuous barrier at the locations and depths as shown on the plans.

20.16 PLANTING – TURF FROM SOD

The City of Woodland standard for turf installation shall be in the form of turf from sod.

Turf Sod Plantings shall be in accordance with the following provisions and approved by the City Engineer:

A. Turf from Sod: shall be a minimum 95% purity and 85% germination. Inert matter shall not exceed 2% nor weed content exceed 0%. Sod shall have well developed root structure sufficiently mature so that it will hold together when held by one end of the roll.

Yellowing, brown, diseased, dried or pest infested sod shall be rejected.

Soil thickness of sod shall be ¼ inch to 5/8 inch thick including top-growth and thatch;

Size of rolls shall be consistent with industry standard lengths and widths and shall not vary by more than 2% in either dimension

Sod mix shall vary depending upon the application as follows:

1. Park Mix (high traffic): shall be 90% Tall Fescue/ 10% Bluegrass.

2. Athletic Fields: shall be 95% Dwarf Fescue/ 5% Bluegrass.

B. Sod Installation: Finish grade to smooth even surface allowing for sod thickness at pavement and other structures to leave the sod one-half inch below finish grade of adjacent surfaces. The soil surface shall be sufficiently firm to resist impressions over one-quarter inch deep or shall be lightly rolled until meeting this firmness. The top six to eight inches of soil shall be watered until that zone has an optimal moisture content for root growth.

Sod shall be laid in rows with staggered ends neatly and tightly butted on all edges. Sod shall be protected from wind and sun exposure during storage with a maximum storage period of twenty-four hours. No overlaps, gaps, ripples or other uneven surface will be accepted. Contractor shall lightly roll all sod after installation to insure optimum contact with soil. Trimming and cutting around structures shall be completed with sharp tools and sod shall be carefully fitted to provide clean continuous appearance.

20.17 PLANTING – TURF FROM SEED

If Turf from Seed is approved by the City, Turf Seed Plantings shall be in accordance with the following provisions and approved by the City Engineer:

A. Seed shall be labeled in accordance with the California Department of Agriculture State Seed Law and Regulations effective on the date of use. Seed which has become wet, moldy, or otherwise damaged in transit or in storage will be subject to rejection at the discretion of the City Engineer.

B. Sow grass seed at a rate of twelve (12) pounds of pure viable seed per 1,000 square feet, sowing one-half (1/2) of the amount in each direction.

C. An even finish grade shall be maintained during seeding operations to ensure proper surface drainage with ridges and depressions removed.

D. No seeding shall be allowed between October 15 and March 15, without prior written approval of the City Engineer. During this period, sod lawns can be used if approved in writing by the City Engineer.

20.18 PLANT ESTABLISHMENT

Plant establishment work shall consist of caring for the project landscape planting.

Plant establishment period shall continue through final acceptance of the project, and plants shall thrive showing proper growth characteristics through the warranty period.

The Contractor shall fill trench settlement, adjust sprinkler heads, water plants, replace unacceptable plants and lawn areas, and perform weed, rodent and other pest control work to the satisfaction of the City Engineer.

Lawns first cut shall be mowed when grass is no less than three inches (3") high and shall be cut to a height of no less than one and one-half inches (1-1/2").

Thereafter, lawn shall be mowed as often as necessary to maintain a maximum height of one and one-half inches (1-1/2").

Weed control, shall be performed as often as required to prohibit interference with plantings and to maintain the project in a neat and uniform condition to the satisfaction of the City Engineer.

At the time of final acceptance of the work, all planted areas shall be weed free and neatly mowed, as applicable, and shall receive a second application of fertilizer as determined by the City Engineer.

Surplus earth, papers, trash and debris, in any planted areas shall be removed and disposed of. The planted areas shall present a neat and clean condition at all times.

20.19 WEED CONTROL

Bermuda grass and other weeds in the areas to be planted with trees, shrubbery and groundcover shall be completely killed and removed. After planting, above areas shall be treated with pre-emergent such as "Surfland," or approved equal.

Before applying any chemicals, the Contractor shall provide the following information and obtain written approval of the materials to be used from the City Engineer:

1. Material Safety Data Sheets
2. Rate of application
3. Method of application
4. Name of applicator
5. Diagram of area to which material is to be applied

If special permits are required for the materials to be used, they shall be obtained from the County Agriculture Commissioner or appropriate authority, and submitted with the request for the use of the materials.

20.20 WATERING

Water from facilities within the limits of the project may be obtained as noted in the development agreement.

Water conservation principles are strongly recommended. Watering shall be done between the hours of 10:00 p.m. and 6:00 a.m. whenever possible.

All plants shall be watered immediately after planting. Water shall be applied in a moderated rate until the backfill soil around and below the roots or ball of earth around the roots of each plant is thoroughly saturated.

Following planting, provide a minimum of weekly watering during the dry season for all trees.

Precautions shall be taken to prevent water from wetting vehicles, pedestrians and pavement. Any erosion or slippage of the soil caused by watering shall be repaired by the Contractor, at Contractor's expense.

Compliance with the provisions in this section shall not relieve the Contractor of the responsibility for the replacement of plants. Any additional watering measure required to maintain the plants in growing condition shall be furnished by the Contractor, at Contractor's expense.

20.21 START OF MAINTENANCE PERIOD INSPECTION

After all planting work is completed the Contractor shall schedule the pre-final inspection with the City Engineer.

20.22 PRE-FINAL INSPECTION

In preparation for entering the maintenance period, the Engineer, Landscape Architect and Contractor will conduct a pre-final inspection. The City Parks Superintendent and the maintenance personnel who will be responsible for the project will be present to acquaint them with the operational requirements of the project and any submitted O&M manuals or operating instructions. At this time, all systems shall be tested and proper operation verified.

20.23 REPLACEMENT

All plants or lawn areas that show signs of failure to thrive anytime or which are injured or damaged as to render them unsuitable for the purpose intended as determined by the City Engineer shall be removed and replaced. The City Engineer may inspect the work weekly or at any interval of time at City discretion and will mark or otherwise indicate all plants or lawn areas to be replaced. The Contractor shall complete replacement of unsuitable plants or lawn areas within one week of notification.

Replacement plants shall be furnished and planted by the Contractor, at Contractor's expense. The City Engineer may agree to the substitution of alternative species of plants to be used as replacements.

Any damage to the finish grading prior to final acceptance caused by re-planting operations and/or vandalism shall be repaired and re-planted by the Contractor, at Contractor's expense. Damage caused by premature or heavy use of facilities before final acceptance will be determined by the City Engineer.

Lawn damages shall be repaired before final inspection but will not automatically be considered cause for extending the maintenance period.

Lawn or plant failure caused by improper maintenance practices and/or weather shall be removed and re-planted.

20.24 MAINTENANCE AND WARRANTY PERIOD

The Maintenance period shall begin immediately after the pre-final inspection of public improvements.

All landscaping shall be maintained for a minimum period of ninety (90) days after pre-final inspection, unless otherwise indicated by the City Engineer.

If at any time during the (90) ninety day maintenance period, any trees, shrubs, plants, grass, etc. have failed to thrive as expected, the deficient item(s) shall be replaced and a new (90) ninety day warranty/maintenance period shall begin for the replaced portions of the landscape project as directed by the City Engineer.

The warranty period for the landscaping portions of the work (trees, shrubs, plants, grass, irrigation system, etc.) will begin after the installation of all landscape items are complete in accordance with the Plans and Specifications. Unacceptable landscape items must be replaced and final inspection performed by the City Engineer before final acceptance is granted.

Contractor shall be responsible for defective materials and faulty workmanship at all stages of the work in progress. Upon relinquishing care, custody, and control of the improvements, the Contractor shall be responsible for defective materials and faulty workmanship for one year for all plant materials (including trees) and all other work.

Any damages to site improvements and facilities under the Contractor's control shall be corrected prior to acceptance of said improvements.

20.25 FINAL INSPECTION

At the end of the maintenance period a final inspection will be held. If all items listed on the punch list are corrected and no other problems have developed, the landscape portion of the project will be accepted and the Contractor will be relieved of responsibility for the work, except for maintenance, warranties or guarantees. The Contractor shall schedule the final inspection with the City Engineer.

SECTION 21: IRRIGATION SYSTEM

21.01 GENERAL

Irrigation system shall include all appurtenances, incidentals and accessories required for proper installation and operation of the system.

All irrigation systems shall be designed in accordance with the State of California Model Landscape Ordinance.

21.02 MANUFACTURER'S WARRANTIES

Manufacturer's warranties, guarantees, instruction sheets and parts lists furnished with articles or material incorporated in the work, shall be delivered to the City Engineer prior to acceptance of the product.

21.03 GUARANTEE

The sprinkler system shall be guaranteed for a period of one (1) year from date of project acceptance. Should any trouble develop within the time specified above due to faulty workmanship or materials, the problem shall be corrected by the Contractor, without expense to the City.

Any settling of backfilled trenches during the one (1) year period after acceptance shall be repaired by the Contractor, at no expense to the City, including the restoration of all damaged property.

21.04 RECORD DRAWINGS

The Contractor shall furnish the Engineer with "As-Built" Record drawings showing any changed or differing site conditions, locations and depths of pipes and valves, etc. The irrigation system will not be accepted until "As-Built" Record drawings are furnished and accepted by the City.

21.05 WATER TAPS ON CITY MAINS

All taps into existing City mains or active service lines shall be "hot taps" made by the City at Contractor expense. No taps will be made until tap fees have been paid to the City (refer to the City's Comprehensive Fee Schedule).

Contractor shall provide traffic controls, to the City's satisfaction, when a tap is occurring in the road right-of-way.

The Contractor shall excavate and fully expose the water main to be tapped and the City will provide all material necessary to perform the water tap. The Contractor shall be responsible for trench shields (as required), backfill compaction, final grading, and pavement replacement (if applicable) over the water main.

The Contractor shall make the necessary arrangements with the City to have City crews available to make all hot taps into the city systems.

21.06 CONNECTIONS TO EXISTING LANDSCAPE MAINS

Connections to existing park landscaping water mains will be performed by the City. The contractor shall perform excavation, expose the main, and provide and install necessary trench safety.

The Contractor shall pay all costs associated with making taps to an existing water line.

City crews will make necessary shutdowns of existing facilities as required.

21.07 SALVAGE

Unless otherwise specified, all salvageable material and equipment removed from the present installations which are not to be reinstalled shall be delivered in good and clean condition to the Parks and Recreation Department at the City Municipal Service Center.

21.08 CONDUIT

Conduit shall conform to Section 13, Electrical, Construction Specifications.

Extend ends of all subsurface conduit one-foot (1') minimum above the surface from under any concrete, asphalt or other surface item.

21.09 BACKFLOW PROTECTION ASSEMBLIES

Backflow prevention assemblies shall conform to Section 7, Engineering Design Standards.

Original backflow test results are to be provided to the City's Utility Maintenance Supervisor immediately following installation.

21.10 IRRIGATION CONTROL VALVES AND VALVE BOXES

Irrigation control valves and valve boxes shall be of the type shown on the Plans and shall conform to the Standard Specifications or as indicated in this section.

Installation shall be in the location indicated on the Plans and shall conform to the Standard Details of these Specifications, unless otherwise approved by the City Engineer.

Valves shown in-groups shall be in individual valve boxes, set in an orderly manner to provide easy access and accessibility to each valve.

Valve boxes shall be installed in accordance with the Standard Details or as shown on the approved plans.

21.11 VALVE MANIFOLDS

Valve manifolds shall be constructed of Polyvinyl Chloride (PVC) Schedule 80 nipples and fittings.

21.12 SWING JOINT ASSEMBLIES

A. For rotors, risers and elbows shall be Schedule 80 PVC. The horizontal nipple shall be Schedule 80. Optionally, rotor swing joints may be pre-made assemblies as manufactured by Rainbird, Hunter or other as approved by the City Engineer.

B. For spray heads, all Swing joint shall be pre-made assemblies as made by Rainbird, Hunter or other as approved by the City Engineer.

21.13 SPRINKLERS

Sprinklers (spray heads and rotors and bubblers) shall be as listed below and shall conform to the drawings shown in the Standard Details , unless otherwise shown and approved on the plans.

A. Spray Heads: shall be Rain Bird 1800 MPR series with check valve with 6" risers where located in turf areas and 12" risers where located in shrub areas.

B. Rotor Heads: shall be Hunter I-20, 25, 35 or 40 series with stainless steel risers and check valves.

C. Tree Bubblers: shall be Rain Bird RWS (Root Watering System) with 1300 or 1400 series bubbler, or approved equal. Two bubblers shall be provided per tree.

D. Shrub Bubblers: shall be Rain Bird 1300 or 1400 series bubblers. One bubbler shall be provided per shrub.

Installation shall conform to the drawings shown in the Standard Details of these Specifications, unless otherwise shown and approved on the plans.

21.14 TRENCHES

Trenches shall be straight with vertical sides and smooth bottoms, with a consistent and even laying grade and depth that follows the contour of the surface.

Provide a minimum eighteen inches (18") of cover for all pressure lines three-inches (3") in diameter and larger.

Provide minimum twelve inches (12") of cover for all lateral lines.

Provide a minimum eighteen inches (18") cover for all control wiring. If in the same trench as an irrigation line, tape bundled wires to the water main at fifteen-foot intervals.

Provide a minimum twenty-four inches (24") of cover for all sleeves crossing pavement and drives, and extend a minimum of twelve-inches (12") past edge of concrete, asphalt or other finish surface ways into the planting area.

All trenches shall be wide enough to permit easy access for installing pipe, wire, etc. and allow enough width for snaking of PVC pipe, to allow for expansion and contraction. Trench width shall be a minimum of 2-1/2 times the size of the pipe.

Daily trench excavation shall be limited by the amount of pipe laying that can be completed that day or as is permitted by the City Engineer. Excavated material shall be stored in a manner that will not endanger pedestrians, the work and will avoid obstructing the traveled right-of-way, sidewalks and driveways. Open trenches and mounds of dirt and debris will be so marked and lighted as to provide safety to pedestrians and vehicles.

Any open excavations along a sidewalk or other type of public travel way shall be plated or covered and barricaded as necessary to prevent access to the area.

Trenches shall be of sufficient width to permit snaking in of all plastic piping in bottom of trench not connected by ring or gasket joint pipe. Pipe connected with ring or gasket joint pipe need not be snaked.

21.15 INSTALLATION OF IRRIGATION PIPE

Plastic pipe, including fittings, shall be installed according to the Manufacturer's directions and as directed by the Engineer.

Concrete thrust blocking shall be Portland Cement Concrete and shall conform to Section 6, Construction Specifications.

The quantity of concrete used shall be sufficient to provide adequate monolithic bracing against undisturbed soil.

Installation of irrigation pipe shall be as shown on the Plans and in accordance with these Specifications.

In all situations where an irrigation pipe is to be installed under concrete, asphalt pavement or any type of pedestrian or vehicle-traveled finish surface, an irrigation sleeve shall be installed. The sleeve shall be Schedule 40 PVC. The sleeve shall be 2.5 times the outside diameter of the proposed irrigation pipe to be installed.

Installation shall be in the location indicated on the plans and shall conform to the drawings in the Standard Details of these Specifications, unless shown and approved otherwise on the plans.

Plastic irrigation pipe shall be placed in trenches on level, undisturbed or well compacted earth and shall be snaked from side to side in the trench at intervals of approximately fifty feet (50'). Pipe shall be held down between joints with minimal mounds of earth to adequately prevent movement.

Foreign material shall be prevented from entering the irrigation system during installation. Immediately prior to assembling all pipes, valves and fittings, all valves shall be plugged or capped pending the attachment of additional pipe or fittings. All lines shall be thoroughly flushed out prior to attachment of terminal fittings.

Pipe shall be cut with a fine tooth hacksaw and all burrs removed. The outside surface of the pipe and the inside surface of the fittings shall be wiped with a clean cloth to remove all dirt and moisture before the cement solution is applied. The cement solutions shall be applied to the pipe and fitting socket with a brush having a width approximately three-quarters (3/4) of the depth of the socket. The cement solution shall be applied freely with a light wiping acting to spread the cement uniformly over the surface. The pipe surfaces or fitting socket shall not be rubbed with the brush any more than is necessary to spread the cement. If the cement thickens before parts are connected, the coated fittings shall be discarded. Solvent weld connections on the supply side of valves shall first be cleaned with Weld-on Solvent No. P-70 or equal. Cement solution shall be Weld-on Solvent No. 2711, or approved equal.

Immediately after the cement has been applied to the surface to be joined, the pipe shall be inserted into the fitting with a twisting motion to the full depth on the fitting socket. Immediately after joining is completed, any excess cement shall be thoroughly wiped from the pipe and fitting. The jointed members shall be allowed to cure for at least five (5) minutes before they are handled. An additional fitting or pipe section may be added to the completed joint within three (3) minutes if care is exercised in handling so that strain is not placed on the previous joint.

The male pipe threads of all threaded connections on PVC plastic pipe shall be coated with a joint compound suitable for use with plastic pipe.

Contractor shall install #10 bare copper tracer wire, taped using PVC tape, to the mainline per the standard drawings.

21.16 TESTING OF IRRIGATION SYSTEM

After laying and before backfill and compaction, irrigation mains and laterals shall be tested for leakage.

Once heads are placed and adjusted by Contractor, layout of sprinklers shall be tested for head to head coverage.

Authorized City personnel shall monitor and record all pressure testing and verify sprinkler coverage.

A. Pressure Test for Irrigation Main: Mains shall be tested and proven watertight under hydrostatic pressure at 125 lbs per square inch.

   Sustain pressure in lines for at least two (2) hours without pressure drop. If pressure drop occurs within two (2) hours, identify and replace deficient area and repeat test until such time as no pressure drop occurs.

   The Contractor shall provide the necessary pump and other testing equipment required for this test. The test gauge shall be a sealed oil filled gauge.

B. Pressure Test for Irrigation Laterals: Laterals shall be tested as specified above, except that the test period shall be a minimum of thirty (30) minutes. The pipe shall be plugged or capped where sprinklers are to be installed while making this test.

C. Sprinkler Coverage Test: The risers for sprinklers on slopes shall be set approximately perpendicular to the slope. Each series of sprinklers shall be installed and test operated. Nozzles of all sprinklers and bubblers shall be adjusted for proper rate of flow and coverage. Sprinklers or bubblers shall be relocated as required to produce uniform coverage.

21.17 BACKFILL OF IRRIGATION PIPELINES

All lumber, rubbish, and rocks shall be removed from trenches and backfill material. Ensure that the pipe will have a firm, uniform bearing for the entire length of each pipeline, to prevent uneven settlement.

In rocky areas, the pipe shall be laid on a minimum of four inches (4") of sand and covered with four inches (4") of sand to prevent rock damage to pipe.

Trenches shall not be backfilled until all required pressure tests are performed, and then carefully backfilled after pipe and wire have been installed. Excavated materials approved for backfilling, consist of earth, loam, sandy clay, and sand, free from large clods or stones. All backfill shall be compacted by mechanical compaction method to the same relative compaction as the surrounding soil. Backfill shall be mechanically compacted in landscaped areas to a dry density equal to adjacent undisturbed soil in planting areas. Backfill shall conform to adjacent grades without dips, sunken areas, humps, or other surface irregularities.

A fine granular material backfill shall be initially placed on all lines. No foreign matter larger than one-half inch (1/2") in size shall be permitted in the initial backfill.

If settlement occurs and subsequent adjustments in pipe, valves, sprinkler heads, planting, or other construction are necessary, the Contractor shall make all required adjustments without cost to the City.

The top six inches (6") of backfill in planting areas and shall consist of select excavated material, free of rocks, debris, vegetative material, and other unsuitable material.

Backfill in street sections shall be per City Standards.

Special backfill requirements may be set forth and noted on the plans as approved by the City Engineer.

21.18 RE-PAVING

Re-paving over trenches shall be as specified in these Standard Specifications, unless otherwise shown and approved on the plans.

21.19 PLASTIC IRRIGATION PIPE

Plastic pipe for irrigation systems shall be polyvinyl chloride (PVC) plastic pipe extruded from one hundred percent (100%) virgin material and shall conform to ASTM Designation D2241.

Plastic pipe on the supply side of the irrigation side of the irrigation control valve shall be one or more of the following types:

A. 1-1/2" or smaller shall be Schedule 40, PVC solvent weld pipe.

B. 2 - 3" shall be PVC, Class 315 solvent weld pipe.

C. 4" and larger shall be Class 200, PVC Gasket Joint.

Plastic pipe on the discharge side of the irrigation control valve shall be Schedule 40, PVC Class 200 solvent weld pipe.

21.20 PLASTIC IRRIGATION PIPE FITTINGS

Fittings for PVC plastic pipe shall be rigid polyvinyl chloride, Schedule 80 high impact fittings and shall be solvent weld type or threaded as shown in the plans and details. Plastic fittings shall have a higher bursting pressure rating than the adjoined pipe.

All joints utilizing ring type fittings and pipe shall be sealed with rubber rings. Fittings shall be of the joint design as recommended by the manufacturer. Ring type plastic pipe and fittings shall be assembled with a non-toxic lubricant as recommended by the manufacturer.

21.21 ELECTRIC AUTOMATIC CONTROLLER

The irrigation system controller shall be a microprocessor based/microelectronics solid-state type, capable of fully automatic and manual operation of the system. It shall be housed in a wall mountable, weatherproof, lockable steel cabinet.

The controller shall operate on a minimum of 120 volts A.C. power input and be capable of operating up to two 23-volt A.C. electric remote control valves per station. The controller shall have a reset circuit breaker to protect it from field wire short circuits entering the controller. Controllers shall have a battery backup power supply and be capable of being programmed for multiple on-off cycles.

The controller shall have a maximum of 12 stations. Each station of the 4 station and 6 station models shall have the capability of being programmed to operate for 0 to 60 minutes in 1 minute increments and/or 0 to 6 hours in 1 hour increments. Each station of the 8 station and 12 station models shall have the capability of being programmed to operate for 0 to 99 minutes in one minute increments and/or 0 to 9.9 hours in 0.1 hour increments, as specified in the plans. The controller shall have two independent programs with three automatic starts per day for each. Each station on the controller shall be assignable to either or both programs. The controller shall have 14-day programming for flexibility in programming day starts. During operation, the controller shall provide a monitoring readout indicating station in operation and time remaining. The controller shall have a 12-hour AM/PM clock.

The 6, 8 and 12 station models shall have a master valve/remote pump start circuit for use with a mainline master valve to pressurize system when the irrigation cycle starts, or to activate a remote pump start relay to the pump during the irrigation cycle.

Contractor shall program a base watering schedule into the irrigation controller that accommodates the City watering window.

The controller shall be capable of being operated manually at any time. A manual "single station" operation for programmed time or new time setting shall be possible without affecting the original program.

Controller shall have a factory preset back-up program for standby operation in the event of a program loss and a battery back-up circuit to maintain power during power loss.

The controller shall be as manufactured by Rain bird Sprinkler Mfg. Corp., Glendora, California, or approved equal.

Electric Controller Enclosure Cabinet shall be as shown in the Standard Details of these Specifications. Cabinet shall be fabricated from 12-gauge cold rolled steel. Joints shall be seam welded and external welds ground smooth to a minimum one-eight inch (1/8") radius. Enclosure shall receive one (1) coat of rust inhibiting primer and two (2) coats of Rustoleum - Ranch Green Paint, or approved equal.

Irrigation controllers shall be installed by a licensed electrician.

21.22 ELECTRIC CONTROL WIRES

Conductors shall be buried directly in the ground a minimum of eighteen inches (18") below the surface and shall follow irrigation supply lines whenever possible. Where conductors pass under paved areas, conductors shall be installed in conduit.

Conductors shall be run continuous without splices from controller enclosure to the valve boxes. At valve boxes, splices shall be clamped and sealed with waterproof connectors.

At least one foot (1') of slack shall be left in each conductor at each splice.

Conductors from controllers to Valves shall be wrapped together with electrical tape at fifteen-foot (15') intervals.

Extend ends of any conduit and conductors one-foot (1') minimum from under any concrete, asphalt or other surface item.

Contractor shall provide (2) two spare yellow wires throughout the entire system.

21.23 IRRIGATION CONTROL WIRES

Irrigation Control Conductors shall be underground feeder type (U.F.) with 4/64" minimum thickness of TW grade polyvinyl chloride insulation.

Control conductors shall be No. 14 AWG. Insulation shall be any color except white. Neutral conductors shall be No. 12 AWG. Insulation shall be white.

21.24 ELECTRIC REMOTE CONTROL VALVES - SIZES 3/4" TO 2"

Electric remote control valves shall have a straight or angle pattern. Valves shall be normally closed and shall be the same size as the pipeline, which they control, unless otherwise indicated on the plans and approved by the Engineer.

Electric remote control valves shall be capable of withstanding a working pressure of one hundred pounds per square inch (100 psi).

Valves shall be completely serviceable from the top without removing the valve body from the system and shall have a wheel or nut type manual adjustment feature to regulate flow from fully open to closed. The adjustment shall remain in set position when the valve is operated manually or automatically. The adjustment feature shall regulate automatic closing time to not less than four (4) seconds. Each valve solenoid shall be designed for operation on a 24 volt 60 cycle AC circuit at a 3.1 watt maximum.

21.25 MANUAL CONTROL VALVES

Manual control valves shall be straight or angle pattern globe valves of brass or bronze construction with replacement compression discs and shall be of the same size as the pipeline which said valve serves, unless otherwise shown on the Plans. Control valves shall be capable of withstanding a working pressure of two hundred pounds per square inch (200 psi).

21.26 IRRIGATION VALVE BOXES

Irrigation valve boxes shall be one of the following types; as indicated on the Plans or in the Special Provisions, or directed by the Engineer:

A. Portland Cement Concrete boxes with a one-piece concrete or cast iron cover, rated for an H2O traffic loading.

B. Plastic boxes conforming to ASTM Designation D638, tensile strength 3400 psi and impact strength of 1.5 pounds per inch.

Valve box extensions shall be of the same type as the valve box. All covers shall be lockable and be legibly marked with the valve ID.

21.27 QUICK COUPLING VALVES

Quick coupling valves shall be of one (1) piece brass or bronze construction, single slot type with one inch (1") threaded pipe connection and one and one-quarter inch (1-1/4") key connection guaranteed to withstand normal working pressure of one hundred and fifty-pounds per square inch (150 psi) without leakage. Quick couplers shall be installed with swing joint assembly and shall be installed a minimum of one foot (1') from curbs and walks where applicable. Refer to "Testing of Irrigation System," B.17, of this section.

21.28 RECORD DRAWINGS AND IRRIGATION STATION CHART

Contractor shall regularly update drawings of the irrigation system and mark any changes made to the system during construction. Below ground features shall be indicated with measurements from at least two surface features. All changes to below ground features shall be recorded before trenches are backfilled. A completed record set shall be submitted to the City upon completion of the project.

In addition to the record drawings the contractor shall provide the City with an 11x 17 laminated color coded irrigation station chart.

{Blank Page}

SECTION 22: PARK IMPROVEMENTS

22.01 GENERAL

These general requirements provide conditions for City park improvements including site furnishings, play equipment, and water play/ splash play equipment.

Park improvements shall consist of supplying and installing park hardscape and furnishings as shown on the approved Plans, and as directed by the City Engineer.

22.02 MANUFACTURER'S WARRANTIES

Manufacturer's warranties, guarantees, instruction sheets and parts lists furnished with articles or material incorporated in the work, shall be delivered to the City Engineer prior to acceptance of the product.

22.03 GUARANTEES

All park improvements shall be guaranteed for a period of, at least, one (1) year from date of project acceptance. Any additional guarantee period, as provided under manufacturer's warranties, shall be honored by the Contractor. Should any trouble develop within the time specified above due to faulty workmanship or materials, the problem shall be corrected by the Contractor, without expense to the City.

22.04 MEASUREMENT OF QUANTITIES

Measurement of Quantities shall be determined by the City Engineer based on delivery tags presented at time of delivery. The Contractor shall give twenty-four (24) hours notice of all deliveries, dates and times. Materials delivered when the City Engineer is not present, depending on verifiability, at City Engineer's discretion, may not be counted.

22.05 CONDITIONS

A. Existing Conditions:

1. Prior to work, the Contractor shall be thoroughly familiar with any surveys and investigative reports directly related to the work to be performed.

2. Contractor shall examine physical conditions at the site, document all conditions differing from those indicated in the contract documents, and inform the City immediately.

B. Site Protection:

1. Trees, shrubs and other materials which are to remain on the site shall be fully protected by constructing a fence around the items to be protected or other method approved by the City Engineer.

2. Refer to Section 20.05.C, Construction Specifications for additional tree protection requirements.

C. Underground Utilities:

1. Contractor shall notify UNDERGROUND SERVICE ALERT at least 48 hours prior to commencing any excavation.

2. Contractor shall relocate or remove existing utilities as shown on the plans or as directed by the City Engineer. Where utilities are marked, careful hand excavation shall be done to determine exact alignment and depth prior to starting excavations within marked areas.

D. Safety:

1. Contractor shall at all times exercise necessary precautions to provide for the protection of the public and employees.

2. Adequate barricades, flashers, fences, signs, and make little or lights shall be installed in all hazardous locations including, but not limited to, open excavations and areas of pedestrian and vehicular traffic. All situations requiring traffic control shall conform to the appropriate Caltrans Traffic Control Manuals and the **Caltrans** Manual of **Uniform** Traffic Control **Device**s.

3. All hazardous materials including, but not limited to, gasoline, solvents, and other similar materials shall be stored in a safe and protected manner, in accordance with City and health regulations.

F. Equipment:

1. Contractor shall provide and maintain all equipment to perform the work.

22.06 SUBMITTALS

A. Modifications and Revisions: Contractor shall submit proposed modifications and revisions prior to performing work.

B. As-Built (Record) Drawings: Upon final completion of the work, the Contractor shall furnish accurate, up-to-date RECORD drawings that include as-built conditions and any and all changes from the original plans made during the installation of the improvements.

C. Operation Manuals, Maintenance Instructions and Warranties: Prior to final acceptance of work, the Contractor shall provide to the City three copies of manufacturers' written operation and maintenance instructions for all equipment installed within the public right-of-way or within areas that the City may be responsible for maintenance and operation.

D. Catalog Cuts: The Contractor shall submit catalog cuts for each pre-manufactured items.

E. Shop Drawings: The Contractor shall submit shop drawings for all custom, modified, or shop fabricated item and where required elsewhere on the approved Plans or in these specifications.

F. Finish samples: The contractor shall supply the City Engineer with samples of all colors and finishes for approval prior to ordering the item.

G. Playground Safety Inspection certification as described below.

22.07 SUBSTITUTIONS

Substitutions of any item shall not be permitted without prior written approval of the City Engineer. Contractor shall provide all product data, cut sheets, and shop drawings necessary to demonstrate the suitability of a proposed substitution.

22.08 WARRANTY

A. Contractor shall be responsible for defective materials and faulty workmanship at all stages of the work in progress. Upon relinquishing care, custody, and control of the improvements, the Contractor shall be responsible for defective materials and faulty workmanship for a minimum period of, at least, one year for all park improvements and all other work.

B. Any damages to site improvements and facilities under the Contractor's control shall be corrected prior to acceptance of said improvements.

22.09 MATERIALS

Materials shall conform to these Specifications and the approved plans.

22.10 LAYOUT

Prior to commencing installation of park improvements, Contractor shall stake layout of the improvements, including use zones of all play equipment, and request review by the City Engineer to determine if any adjustments to the layout shown on the drawings is necessary.

22.11 SITE FURNISHINGS

A. Benches: shall include a back, arm rests, and be a minimum six feet in length with a baked-on polyester powder-coat finish as manufactured by DuMor, Inc., Wabash Valley or approved equal.

B. Picnic Tables: shall have a baked-on polyester powder-coat or plastisol coated finish as manufactured by DuMor, Inc., Wabash Valley or approved equal.

All picnic tables shall provide at least one space compliant with current Americans with Disabilities Act Accessibility Guidelines (ADAAG) and California Title 24 requirements for wheelchair access and seating.

C. Trash Receptacles/Recycling Receptacles:

a. 32 gallon nominal capacity with liner for ease of collecting and emptying collected materials
b. Top or cover designed to keep out rain and other weather elements
c. Black or other color for trash and blue color for recycling
d. Trash and recycling containers to be located in pairs
e. The overall "recycling message" should be highly visible:
    i. Must display the recycling "chasing arrow" symbol at least 10 inches in diameter on two sides of the container.
    ii. Must include "Recyclables Only" and "No Food Waste" labels in lettering at least 2 inches high on two sides of the container and legible from a 10-yard distance.
    iii. Signage must have graffiti-resistant coating.
f. Baked-on finish, such as, fusion epoxy powder coated finish or plastisol coated finish (DuMor, Inc., Wabash Valley) or approved equal.
g. Approved makes are DuMor, Inc, Wabash Valley, or Model #PR996-031 as manufactured by Barco Products, or approved equal. Or match existing container style in historic or downtown districts or other areas as designated by the City Engineer.

D. Drinking Fountains: shall be ADA compliant hi-lo fountains (2 fountains and basins in combination) Model #440 including optional pet fountain as manufactured by Most Dependable Fountains or approved equal.

E. Bike Racks: shall be Model #83-00, manufactured by DuMor Inc., or approved equal. Number of loops (bike parking spaces) to be defined on the plans. A minimum of 2 loops shall be provided for any installation.

F. Barbecue (Single): shall be steel, embedment mounted, model #27-00, by DuMor Inc. or model # 100001085 by Little Tikes or approved equal.

G. Barbecue (Group): shall be steel, embedment mounted, model #24-00, by DuMor or model # 100001092 by Little Tikes or approved equal.

H. Dog Waste Disposal Station: shall be green aluminum model #1003-Lm by Dogipot or approved equal.

I. Park Sign: shall be single sided precast concrete Model #714S (sign) and #703C (base) by Outdoor Creations or approved equal. Sign to include City logo and park name. Colors to be approved by City Engineer.

J. Basketball Goals: shall be manufactured by BSN Sports, Tomark Sports, Douglas or approved equal.

K. Soccer Goals: shall be permanent or semi-permanent (removable) with the ability to anchor into natural turf or synthetic turf as manufactured by BSN Sports, Tomark Sports, Douglas or approved equal. Powder coat color shall be white.

All site furnishings shall be installed in accordance with manufacturer's instructions.

22.12 PLAY EQUIPMENT

All materials and methods shall, at a minimum, conform to the latest version of California Code of Regulations: Title 22 – Social Security, Division 4 – Environmental Health, Chapter 22 – Safety Regulations for Playgrounds.

In addition, all materials and methods must meet the following standards:

1. Consumer Product Safety Commission "Handbook for Public Playground Safety", current version
2. ASTM F1487 "Standard Consumer Safety Performance Specifications for Playground Equipment for Public Use", current version
3. ASTM F-1292 "Specifications for Impact Attenuation of Surface Systems Under and Around Playground Equipment", current version
4. CFR Part 1191 "Americans with Disabilities Act Disability Guidelines for buildings and Facilities", Section 15.6 "Play Areas", current version

All components of play equipment shall be certified by the International Play Equipment Manufacturers Association (IPEMA). Contractor shall provide Certificate of Compliance with IPEMA to City Engineer prior to purchase of items.

Prior to purchase of equipment, Contractor shall submit for approval a plan view of play equipment at an appropriate, legible scale indicating overall dimensions with all components labeled and all deck heights indicated. Additionally, Contractor shall submit for approval a complete list of components including a description of component, quantity, finish and color.

A. Play Equipment Manufacturers: Approved play equipment manufacturers include:

1. Miracle Recreation Equipment
2. Landscape Structures
3. Play World Systems,
4. or equivalent

Contractor shall assemble and install playground equipment in compliance with the written instructions of the manufacturer. Equipment shall be installed by or under the direct supervision of an individual who is authorized by the manufacturer to assemble and install the equipment.

Prior to its first use, the playground equipment shall be inspected by a Certified Playground Safety Inspector who shall certify in writing that the equipment, insofar as it can be seen without disassembly or excavation of the surfacing, is in compliance with ASTM F-1487-98 and CPSC Handbook Publication number 325.

B. Play Area Surfacing: Play area surfacing shall be a dual layer poured-in-place system with a wearing layer upper membrane and an underlying impact attenuation cushion layer. The finished surface shall be porous and capable of being installed at varying thickness to comply with Critical Fall Height requirements of playground equipment. Play area surfacing shall be SpectraPour by Spectraturf Global Surfacing Systems or approved equal.

C. Water Play/Splash Play Equipment: shall be recirculation system system with all components and operating system provided from the same manufacturer cover under a single warranty. Equipment shall be Splashpad equipment from Vortex Aquatic Structures International Inc. or approved equal.

22.13 CONCRETE FOOTINGS

All concrete footings for site furnishings and play equipment shall be Class 2 concrete with a ¾" minimum size aggregate, unless otherwise approved by the City Engineer. Fiber mesh

is required in all non-reinforced flatwork. Footings shall be in accordance with Section 6, Construction Specifications.

Footings shall be installed below finish surface. In paved areas paved surface shall be installed over footing to provide clean finished surface.

22.14 PARK WATER SYSTEMS

Park water system design shall conform to the applicable portions of Section 12 (Water Distribution System) and Section 21 (Irrigation), Construction Specifications, except as follows:

A. PLASTIC POTABLE PIPE

Plastic pipe for potable water systems within City parks and recreation areas and where designated on the Plans, shall be polyvinyl chloride (PVC) plastic pipe extruded from one hundred percent (100%) virgin material conforming to ASTM Designation D2241, or shall conform to Section 12, Construction Specifications, for public water systems, and shall be used as noted below.

1. Pipe less than two inches (2") diameter shall be copper water service per Construction Specifications Section 12.02.H. Water Services, or, pipe less than four inches (4") diameter shall be Schedule 40 PVC with solvent welded joints.

2. Pipe four inches (4") diameter and larger shall be Ductile Iron or PVC (C900) water main per Construction Specifications Sections 12.02.A or B., respectively.

B. STERILIZING POTABLE WATER LINES

Sterilization and testing of water lines for potable purposes shall conform to Section 12, Construction Specifications.

C. INSTALLATION OF POTABLE PIPE

Installation of potable pipe shall conform to the requirements for installation of public water systems as provided in Section 12, Construction Specifications.

22.15 PARK IRRIGATION SYSTEMS

Park irrigation system design shall conform to the applicable portions of Section 21 (Irrigation), Construction Specifications, except as follows:

A. ELECTRIC AUTOMATIC CONTROLLER

Automatic controllers for use on City parks shall be central control ready Motorola Irrinet controller with hydrometer in UL rated stainless steel enclosure.

B. **BOOSTER PUMPS**

Booster pumps for use on City parks shall be by Custom Pump and Power or approved equal.

C. **ENCLOSURES**

All above grade enclosures, including controller boxes, booster pump enclosures and electric service panels shall be either anodized aluminum or stainless steel. Enclosures shall be finished (powder coated or painted) as required.

22.16 PARK SANITARY SEWERS

Park sanitary sewer design shall conform to the applicable provisions of Section 10, Construction Specifications.

22.17 PARK STORM DRAINAGE

Park storm drainage design shall conform to the applicable provisions of Section 11, Construction Specifications.

22.18 PARK ELECTRICAL AND LIGHTING

Park electrical and lighting design shall conform with the applicable portions of Section 9, Engineering Design Standards and Section 13, Construction Specifications, except as follows:

A. **LIGHT FIXTURES**

Park light fixtures are not required to match City standard street light fixtures.

Park light poles shall be aluminum with a textured powder coat finish

All light fixture luminaires shall be 120 volt, IP66 rated and dark sky compliant. All safety and area lighting fixtures shall be LED.

All non-electrical hardware shall be stainless steel.

Light fixture globes shall be composed of acrylic material.

Manufacturer warranty for all lighting fixtures and poles shall be:

1. LED Fixtures: 8 years from date of acceptance.
2. Material and Workmanship: two (2) years from date of acceptance.
3. Paint/Coating: five (5) years against corrosion, peeling and fading of more than 20% of original gloss.

22.19 ENCLOSURES

All above grade enclosures, including controller boxes, booster pump enclosures and electric service panels shall be either anodized aluminum or stainless steel. Enclosures shall be finished (powder coated or painted) as required.

22.20 CLEANING

Contractor shall thoroughly clean all areas where work has occurred. Excess material, debris and rubbish shall be removed from the site.

Contractor shall take all precautions to protect completed work. Immediately repair or replaced any areas or improvements damaged during construction operations.

{Blank Page}

SECTION 23: TREE PRUNING

23.01 GENERAL

These general requirements provide conditions for the basic standards for tree pruning in the City of Woodland. These standards apply to all those working on all trees located on public property and in the public right-of-way, including City of Woodland employees and managers, private contractors, property owners, and residents.

23.02 STANDARDS

Unless otherwise shown or specified all materials and methods shall conform to the appropriate current edition of:

1. American National Standards Institute (ANSI) A300 Pruning Standards
2. ANSI Z133.1 Safety Standards
3. ISA Best Management Practices: Tree Pruning

City arborists, managers, related personnel and contractors should obtain copies of the above publications and apply the standards and guidelines when engaged in pruning operations in Woodland. Copies of these documents can be obtained from the International Society of Arboriculture (see Resources). Occupational health and safety standards in the workplace shall be observed at all times.

For street trees, Chapter 20A.Trees, of the City of Woodland Code establishes responsibility regarding planting, maintenance (including pruning), and removal. Tree damage caused by inappropriate pruning is addressed in Sec. 20A-1-160 of the City of Woodland Tree Code.

23.03 QUALITY CONTROL

All tree pruning operations shall be done under the supervision of a qualified arborist.

"Qualified arborist" shall mean arboriculture professionals with any one of the following certifications or credentials: ISA Certified Arborist, ISA Board Certified Master Arborist, ASCA Registered Consulting Arborist, and individuals holding a college degree (4-year) in Arboriculture, Urban Forestry, or closely-related discipline, with 3 years of documented field experience in urban tree care.

23.04 PRUNING PLANS

For commercial contractors, a written plan of work shall be prepared that clearly identifies the tree species, location, need for pruning and the scope of pruning. A checklist format

can be used. Where multiple reasons for pruning exist, they should be prioritized from highest to lowest. A separate plan is needed for each tree. For groups of trees of the same species with similar pruning needs, one plan will suffice.

For all city departments and agencies, work plans shall be developed either for individual trees or for groups of trees, such as trees along streets, in parks, or on the grounds of public buildings. Plans shall include species, location, need for pruning and the scope of pruning. Pruning plans shall be specific for the species to be pruned.

Work plans shall be available at work sites during pruning operations.

A. Pruning Cuts

Pruning is a wounding process that causes some level of injury to trees. It is important to make pruning cuts that minimize injury or the potential for injury. For instance, cuts should be made on branches in a manner that ensures rapid and complete wound closure, thus reducing the potential for decay. Information on appropriate branch removal practices and the size and location of cuts is found in ANSI A300 Part 1 (Pruning) and Best Management Practices: Tree Pruning (see References).

Note that flush cuts increase the potential for decay and reduce the formation of callus tissue above and below the wound (wound wood). In some cases, flush cuts can stimulate vigorous but incomplete callus development. Conversely, leaving branch stubs prevents wound closure and increases the potential for decay. These types of pruning cuts should be avoided.

23.05 PRUNING PRACTICES

A. Pruning Cuts: All pruning cuts shall conform to ANSI A300 standards (Part 1: Pruning). Do not make flush cuts or leave branch stubs.

B. Amount of Pruning: Not more than 25% of the crown shall be removed within an annual growing season. The percentage of foliage removed shall be adjusted according to age, health, and species considerations. Stressed trees are less tolerant of pruning and leaf area removal should be minimal. In cases where more than 25% of the crown needs to be removed, such as to reduce the potential for structural failure, a qualified arborist shall make an assessment of the amount of pruning needed to abate the hazard. When possible, such pruning should be scheduled over a two- or three-year period. Pruning should be minimal on species prone to water sprout development. For such species, pruning during the summer months may reduce the potential for water sprout development (see Standard 4). For species susceptible to sunburn injury, pruning shall not expose bark tissue of the trunk and scaffold branches to sunlight levels that lead to injury.

C. Pruning Schedule: Generally, pruning can be done throughout the year. For some trees, however, certain periods or seasons need to be avoided. For species susceptible to particular insect or disease problems, avoid pruning at times of the year when the problem will be exacerbated (e.g., do not prune pines during the spring and summer months in order to minimize the potential for bark beetle infestations). For trees with a notable flowering trait, avoid pruning prior to or during flowering periods (unless flowers cause allergic reactions). Pruning to remove dead, diseased, or broken branches can be done at any time of year. Pruning during the summer months can be used as a strategy to reduce water sprout development in certain species.

For deciduous species, do not prune during bud swell, bud break, or leaf expansion in the spring. Do not prune during times of the year that may initiate or exacerbate a pest problem (e.g., do not prune elms during the summer months to avoid Dutch elm disease infection and transmission).

Broadleaf-evergreen species (such as Eucalyptus spp., Acacia spp., and Myoporum spp.,) can be pruned throughout the year. Avoid pruning during periods that stimulate substantial water sprout development. For species prone to foliar diseases, avoid pruning at times when disease-susceptible new growth can be stimulated by pruning.

For conifers, pruning during the winter months (November through February) is generally recommended. Do not prune during periods of needle formation and enlargement. For species susceptible to bark beetle infestations (e.g., Pinus spp.), do not prune when beetles are active (typically March through October in Woodland).

D. Wound Treatment: Pruning wound treatments (dressings and paints) shall not be used.

E. Equipment: Pruning equipment shall be sharp and sized appropriately for the pruning cut. Avoid the use of any pruning and climbing equipment that may cause damage to bark tissue. Spikes (climbing spurs) shall not be used for climbing trees unless the tree is being removed, or when limbs are more than throw-line distance apart and there is no other means of climbing the tree. Pruning tools shall be treated with a disinfectant (such as Lysol) when pruning trees infected with a pathogen that may be transmitted (on tools) from one tree to another of the same species, such as elms (Ulmus spp.). Disinfectants should be used before and after pruning individual trees.

23.06 PRUNING MATURE TREES

A. Pruning Types: In Woodland, all those engaged in tree pruning operations shall be familiar with each of the pruning types. Selection of the pruning type(s) shall be based on pruning objectives (see Standard 1). Refer to publications cited in Section C1 for descriptions of pruning types. Clearance pruning that does not comply with Standards 3 and 4 shall be conducted only under the supervision of a qualified arborist (see footnote 1).

B. Head Cuts: Heading cuts shall not be used when pruning mature trees, except in very limited cases. Whenever possible, use reduction cuts to reduce height and branch removal cuts (thinning cuts) to reduce branch end weights. When reduction and branch removal cuts are not possible (such as when interior lateral branches are not present) and tree hazard potential is high, then heading cuts may be needed, but their use should be minimized. The practice of pollarding shall be limited in application to London plane tree (Platanus x acerifolia) and elm (Ulmus spp.), and only when initiated on young trees (i.e., not after they reach a juvenile or mature stage).

C. Stressed Trees: For old, unhealthy, and stressed trees, pruning should be limited to the removal of dead branches and structural defects. Removal of live branches should be avoided or minimized.

D. Utility Pruning: Utility pruning requires extensive training in safe work practices and specialized pruning techniques. Prior to pruning trees for line clearance, all workers shall have documented training that meets utility and tree industry standards. Pruning practices shall follow guidelines described in ANSI A300 Pruning Standards (see References). A plan of work that incorporates these practices shall be developed prior to pruning.

23.07 PRUNING YOUNG AND JUVENILE TREES

Trees should be structurally pruned when they are young. Follow guidelines in: Training Young Trees for Structure and Form (see References).
Young trees will need follow-up pruning, preferably three times in the first five years, and then periodically as they develop through the juvenile phase into maturity.

23.08 PALM PRUNING

Palm pruning should be limited to the removal of dead, broken, and strongly chlorotic fronds. Live, healthy fronds should not be removed. Fronds should be severed close to the petiole base without damaging living trunk tissue. Palm fruit, flowers, and loose petiole bases should be removed if deemed to be a safety risk. A disinfectant (such as Clorox or

rubbing alcohol) shall be used on pruning tools before and after pruning individual trees. Climbing spikes or spurs shall not be used to climb palms for pruning.

23.09 ROOT PRUNING

Root pruning should be considered only when other options for correcting a conflict between roots and infrastructure are deemed not practical. For trees requiring root pruning, a tree assessment shall be conducted and a root-pruning plan shall be developed by a qualified arborist (see footnote 1). Avoid root pruning during times of the year when wind loads on trees are greatest, such as during the winter months. Crown pruning prior to or following root pruning shall be done only in cases where the potential for structural failure may increase substantially because of root pruning.

{Blank Page}

SECTION 24: LED STREET LIGHTS

24.01 DEFINITIONS

Terminology, definitions and abbreviations to clarify the meanings of the specifications are as follow:

Terminology	Description
CALiPER	Commercially Available LED Product Evaluation and Reporting A US DOE program established for the testing and monitoring of commercially available LED luminaires and lights.
CCT	Correlated color temperature. A visible light characteristic of comparing a light source to a theoretical, heated black body radiator. Measured in degrees (°) Kelvin.
Chromaticity	The property of color of light.
CITY	City of Woodland, CA
Color Rendition	CRI is a 1–100 scale that measures a light source's ability to render colors where the Color temperature CCT is the color of the light source. Yellow-red colors are considered warm (2700° – 3000° K) and blue-green colors are considered cool (3600° – 5500° K). A color temperature of 3600° – 5500° K is generally recommended for most outdoor lighting applications. A 100-Watt incandescent light bulb has a CRI value of 100.
fc	Foot-candle. Unit of illuminance.
Illumination	The distribution of light on a horizontal surface. The purpose of all lighting is to produce illumination. The units of measure are Footcandle and Lux.
IP	International Protection rating, sometimes referred to as ingress protection, that delineates the level at which foreign objects and water can intrude inside a device.
L70	The extrapolated life in hours of luminaire when the luminous output depreciates 30% from initial values.
LED	Light Emitting Diode. LEDs are based on non-carbon-based, semi-conducting device that produces light when an electrical current passes through it.
Lumen	A measure of light emitted by a lamp. As a reference, a 100-watt incandescent lamp emits about 1,750 lumens.

Terminology	Description
Luminaire efficacy	A measure of efficacy of the complete luminaire, or fixture, taking into account the optics, thermal design, and other design factors that impact efficacy. It is calculated by measuring the total light output of a luminaire, divided by the amount of power drawn by that luminaire. It is expressed in lumens per watt (lm/W).
Luminous intensity (candlepower)	Total number of lumens from a surface emitted in a given direction. The unit of measure is candela.
Luminous flux	The time rate of flow of light. The unit of measure is Lumen.
NEMA	National Electrical Manufacturers Association
NVLAP	National Voluntary Laboratory Accreditation Program. A program under the US DOE to accredit independent testing laboratories to qualify.
Power Factor	The ratio of the real power component to the total (complex) power component
Rated power	The power consumption that the luminaire was designed and tested for at ambient temperature (70°F or 21°C).
SPD	Surge Protection Device. A subsystem or component(s) that can protect the unit against short duration voltage and current surges.
THD	Total Harmonic Distortion. The amount of higher frequency power on the power line.
Source efficacy	A measure of the efficacy of the light source, separate from the fixture. It is calculated by measuring the total light output of a lamp/power supply system, divided by the power drawn by that system. It does not account for losses caused when that system is installed in a fixture. It is expressed in lumens per watt (lm/W).
Spectral Power Distribution	A graph which allows the reader to evaluate the relative amount of radiant power(expressed in milliwatts per nanometer, mW/nm) across the range of wave- lengths in the visible spectrum (expressed in nanometers, nm), or approximately 380 – 780 nm.
UL/CUL	Underwriters Laboratories Inc. (in USA/Canada).

24.02 REQUIREMENTS

All equipment shall comply with Design Standards Section 9 and Section 86 of Caltrans Standard Specifications.

Only luminaires, with approved product codes or designations, from PG&E prequalified list are acceptable. A list of PG&E prequalified list can be obtained from the following link:

http://www.aesc-inc.com/download/spc/2010spcdocs/UnifiedManual/App%20E%20Approved%20LED%20Lighting.pdf

The use of PG&E prequalified list of luminaires does not relieve the contractor of the responsibility to provide materials that meet the following specifications. All material may be inspected or tested at any time.

Any material that does not meet these technical specifications will be rejected.

Notify the Engineer in writing as to which fixtures from the prequalified list of fixtures will be supplied on each project.

24.03 SUBMITTALS

Each LED luminaire shall be accompanied by:

1. Product specification sheets or other documentation that includes the designed parameters as detailed in the specification. The parameters include:
   a. Maximum power in watts
   b. Maximum designed junction temperature
   c. Heat sink area in square inches
   d. Designed junction to ambient thermal resistance calculation with thermal resistance components clearly defined
   e. L70 in hours when extrapolated for the average nighttime operating temperature
   f. Certified test results for California Test No. 678 performed by a qualified laboratory
2. IES LM-79 and IES LM-80 compliant test reports from a CALiPER-qualified or NVLAP-approved testing laboratory for the specific model submitted.
3. Initial and depreciated isofootcandle charts showing the specified minimum illuminance curve for that particular application. The charts shall be calibrated to feet and show a 40 by 40 foot grid. The depreciated isofootcandle curve shall be calculated at the minimum operational life.
4. Test report showing surge protection device (SPD) performance as tested under ANSI / IEEE C62.41.2 and ANSI / IEEE C62.45.

24.04 QUALITY CONTROL AND ASSURANCE

The luminaires shall be manufactured under the manufacturer's quality assurance program. The program shall include (1) production quality assurance and (2) design quality assurance.

Production quality assurance shall include statistically-controlled routine tests to ensure minimum performance levels of the modules built to meet this specification and a documented process for resolving problems. The process and test results documentation shall be kept on file for a minimum of 7 years.

Design quality assurance shall be performed by the manufacturer or an independent testing lab hired by the manufacturer on new luminaire designs and when a major design change is implemented on an existing design. A major design change is defined as a design change, electrical or physical, that (1) changes the performance characteristics of the luminaire, (2) results in a different circuit configuration for the power supply, or (3) changes the layout of the individual LEDs in the module. Submit 2 units for each design for design qualification testing.

The sample luminaires shall be energized for a minimum of 24 hours, at 100 percent on-time duty cycle, at a temperature of +70°F before performing design qualification testing. Failure of the luminaire that renders the unit non-compliant with the specification after burn in for a minimum of 24 hours shall be rejected.

The luminaire shall be tested under California Test No. 678 and as specified. Luminaire performance shall be judged against the specified minimum illuminance in the specified pattern for a particular application. The luminaire lighting performance shall be adjusted, depreciated, for the minimum operating life by using the LED manufacturer's data or the data from the LM-80 test report, whichever results in a higher level of lumen depreciation.

The luminaire is compliant photometrically, if the initial minimum illuminance level is achieved in 100 percent of the area of the specified lighting pattern, the depreciated minimum illuminance is maintained in at least 95 percent of the area of the specified lighting pattern, and the minimum length of the depreciated isofootcandle curve is equal or greater than the length of the specified isofootcandle curve.

LED lights shall provide the following minimum initial lumens:

LED Fixture Rating	Initial lumens
37 watt, 20 LED	2,300
54 watt, 30 LED	3,500
90 watt, 50 LED	5,550
139 watt, 80 LED	9,150

The City may perform random sample testing on shipments. Testing will be completed within 30 days after delivery to the City. Luminaires will be tested under California Test No. 678 and as specified. All parameters of the specification may be tested on the shipment sample.

24.05 LUMINAIRE IDENTIFICATION

Each luminaire shall have the following identification permanently marked inside the unit and outside of its packaging box:

1. Manufacturer's name
2. Trademark
3. Model number
4. Serial number
5. Date of manufacture (month-year)
6. Lot number

The rated voltage, watts and rated power in volt-ampere shall be permanently marked inside each unit.

24.06 COMPATIBILITY

The luminaire shall be operationally compatible with currently used lighting control systems and photoelectric controls

24.07 WARRANTY

The manufacturer shall provide a written warranty for the performance of the luminaire and against defects in materials and workmanship for the luminaires for 84 months after acceptance of the luminaires. Replacement luminaires shall be provided promptly after receipt of failed luminaires at the contractor's expense. The City pays for shipping cost of the failed luminaires. All warranty documentation shall be submitted to the Transportation Laboratory before random sample testing. Deliver replacement luminaires to City Municipal Service Facility.

24.08 PHOTOMETRIC REQUIREMENTS

The illuminance shall not decrease by more than 30 percent over the minimum operating life or L70 shall be at least the minimum operating life. The measurements shall be calibrated to standard photopic calibrations.

The luminaire shall not allow more than:

1. 10 percent of the rated lumens to project above 80 degrees from vertical
2. 2.5 percent of the rated lumens to project above 90 degrees from vertical

24.09 MATERIALS

The mast-arm-mounted luminaire consists of an assembly that uses LEDs as the light source. The LED luminaire assembly shall consist of a housing, an LED array, and an electronic driver, and shall comply with the following requirements:

1. UL listed under UL 1598 for luminaires or an equivalent standard from a recognized testing laboratory
2. Have a minimum operational life of 70,000 hours
3. Expected to operate at an average operating time of 11.5 hours per night
4. Designed to operate at an average nighttime operating temperature of 70°F
5. Have an operating temperature range from -40°F to +130°F
6. Expected to operate above 100°F, but not expected to comply with photometric requirements

The individual LEDs shall be connected such that a catastrophic loss or a failure of one LED will not result in the loss of the entire luminaire. The housing shall be fabricated from materials that are designed to withstand a 3000-hour salt spray test under ASTM B 117. Each refractor or lens shall be made from UV-inhibited high impact plastic such as acrylic or polycarbonate and be resistant to scratching. Polymeric materials of enclosures containing either the power supply or electronic components of the luminaire shall be made of UL94VO flame retardant materials. The lenses of the luminaire are excluded from this requirement. Paint or powder coating of the housing shall comply with Caltrans Section 86, "Electrical Systems," of the Standard Specifications.

24.10 LED DRIVER

The LED drivers shall have the following specifications:

1. A high power factor of 0.9 or greater
2. Total Harmonic Distortion (THD) shall not exceed 20%
3. Maximum operating temperature shall be from 40°F to 130°F degrees
4. Certified in compliance to UL/CUL requirements
5. Weather tightness rating IP66
6. The current supplying the LEDs shall be reduced by the driver if the internal temperature exceeds 203°F, as a protection to the LEDs and the electrical components
7. Electronic drivers shall be suitable for use of 60Hz ±3Hz with auto adjusting to voltages between 120V to 277V, and 347 to 480V single-phase and three-phase services
8. Driver module shall be readily accessible and field replaceable for maintenance and have provisions to adequately radiate excess heat.

24.11 LAMP

1. LEDs shall be high-flux/high-power type with rotor life of 70,000 hours minimum producing minimum of 70% of initial intensity at 50,000 hours of life. LEDs shall be tested in accordance with IESNA LM-80 testing procedures. LEDs shall have a nominal correlated color temperature of 6,000° (±500°) Kelvin nominal with minimum CRI of 65 or better. LEDs for post-top fixtures may have a correlated color temperature of 4,000° (+500°) Kelvin nominal.
2. Lamps shall be grouped as modular units for ease of field maintenance and replacement. Each modular unit shall be capable of being quickly replaced without taking the head down from the light pole.
3. Lamps shall operate at 350 (low) mA or 525 (med) mA at a standard operating temperature of 77° F. Lamps for post-top applications shall operate at manufacturer's recommended amperages.

24.12 SURGE PROTECTION

The luminaire on-board circuitry shall include an SPD to withstand high repetition noise transients as a result of utility line switching, nearby lightning strikes, and other interference. The SPD shall protect the luminaire from damage and failure for transient voltages and currents as defined in ANSI / IEEE C64.41.2 (Tables 1 and 4) for Location Category C-High. SPD shall conform to UL 1449 or UL 1283, depending of the components used in the design. SPD performance shall be tested under ANSI / IEEE C62.41.45 based on ANSI / IEEE C62.41.2 definitions for standard and optional waveforms for Location Category C-High. The luminaire and associated on-board circuitry shall meet Class A emission limits under FCC Title 47, Subpart B, Section 15 regulations concerning the emission of electronic noise.

24.13 ELECTRICAL

The luminaire shall operate from a 60Hz ±3Hz AC line over a voltage ranging from 95 to 250 V (ac). The fluctuations of line voltage shall have no visible effect on the luminous output. The standard operating voltages are 120 and 240 V (ac). The power factor of the luminaire shall be 0.90 or greater. Total harmonic distortion (current and voltage) induced into an AC power line by a luminaire shall not exceed 20 percent.

24.14 APPROVED LED STREET LIGHTS

The following LED Street Lights or approved equivalent are required for use on Standard Pole & Mast Arm applications.

Manufacturer	Model Spec	Wattage	# LEDs

Manufacturer	Model Spec	Wattage	# LEDs
Beta, by Ruud Lighting	STR-LWY-2M-HT-02-C-UL-SV-350-UTL	37 watts	30
Beta, by Ruud Lighting	STR-LWY-2M-HT-03-C-UL-SV-525-UTL	54 watts	30
Beta, by Ruud Lighting	STR-LWY-2M-HT-05-C-UL-SV-350-UTL	91 watts	50
Beta, by Ruud Lighting	STR-LWY-2M-HT-08-C-UL-SV-350-UTL	139 watts	80

{Blank Page}

Appendix A:

Conversion Factors

City of Woodland
Engineering Standards
2010

{Blank Page}

APPENDIX A: CONVERSION FACTORS

LENGTH

1 mile (mi)	=	1.609 km	1609 m	
1 yard (yd)	=	.9144 m	91.44 cm	
1 foot (ft)	=	.3048 m	30.48 cm	
1 inch (in)	=	.0254 m	2.54 cm	

AREA

1 acre	=	4.04 E-3 km^2	4047 m^2	
1 $mile^2$ (mi^2)	=	2.59 km^2	2.59 E6 m^2	
1 $yard^2$ (yd^2)	=	.836 m^2	8361 cm^2	
1 $foot^2$ (ft^2)	=	.0929 m^2	929 cm^2	
1 $inch^2$ (in^2)	=	6.4 E-4 m^2	6.45 cm^2	

VOLUME

1 gallon	=	3.78 E-3 m^3	3.78 L	3785 cm^3
1 $yard^3$	=	.7645 m^3	764.55 L	
1 $feet^3$	=	2.8 E-2 m^3	28.31 L	28316 cm^3
1 $inch^3$	=	1.6 E-2 L	16.39 cm^3	

VELOCITY

1 mph	=	1.6 km/h	.447 m/s	
1 cfs	=	28.316 L/s	28.316 E-3 m^3/s	28316 cm^3/s
1 gpd	=	3.785 L/d	28.316 E-3 m^3/min	3785 cm^3/s
1 gpm	=	3.785 L/m	37.85 E-3 m^3/d	3785 cm^3/s
1 acre-inch/hour	=	28.54 L/s	28.54 E-3 m^3/s	28542 cm^3/s

PRESSURE

1 psi	=	6.81 E-2 atm	6.89 E3 Pa	6.90E-2 bar
		51.715 torr	51.715 mmHg	

TEMP.

1°C	=	33.8°F	274.15K

MASS

1 pound (lbm)	=	.4536 kg	453.6 g

FORCE

1 pound (lbf)	=	4.448 N	4.45E5 dyn
360°	=	2π Rad	1 Rev